TAYLOR
United Technologies

Item No. _____

161

Soft Serve Freezer

Compact Twin Twist, Taylormate®

Shown with optional cart

Features

Offer all the popular soft serve variations from low or non-fat ice creams to custard, yogurt and sorbet. Serve two separate soft serve flavors, or an equal combination of both in a twist.

Freezing Cylinder
Two, 1.5 quart (1.4 liter).

Mix Hopper
Two, 8 quart (7.6 liter). Separate hopper refrigeration (SHR) maintains mix below 41ºF (5ºC) in Auto and Standby modes.

Indicator Lights
The Mix Low light alerts the operator to add mix. Audible alarm may be enabled to sound when mix is low.

Electronic Controls
Finished product quality is monitored by Softech™ controls that measure viscosity.

Standby
During long no-use periods, the standby feature maintains safe product temperatures in the mix hopper and freezing cylinder.

Air Filter
Easily removable, cleanable air filter helps keep condenser clean for optimal refrigeration system performance.

Door Interlock System
Protects the operator from injury as the beater will not operate without the dispensing door in place.

NSF Standard 6 | c UL us LISTED SA2650 | CE Selected 50 Hz. Models

Optional cart recommended for self service application to meet Americans with Disabilites Act (ADA) dispensing height.

Rockton, Illinois 61072
800-255-0626
Phone 815-624-8333 Fax 815-624-8000
www.taylor-company.com
e-mail: info@taylor-company.com

International Office
Taylor Company S.r.l.
Roma, Italy
Tel: **+39-06-420-12002** Fax: +39-06-420-12034
e-mail: romeoff@taylor-company.com

ISO 9001:2008
Registered Firm

161 Soft Serve Freezer

Shown with optional cart

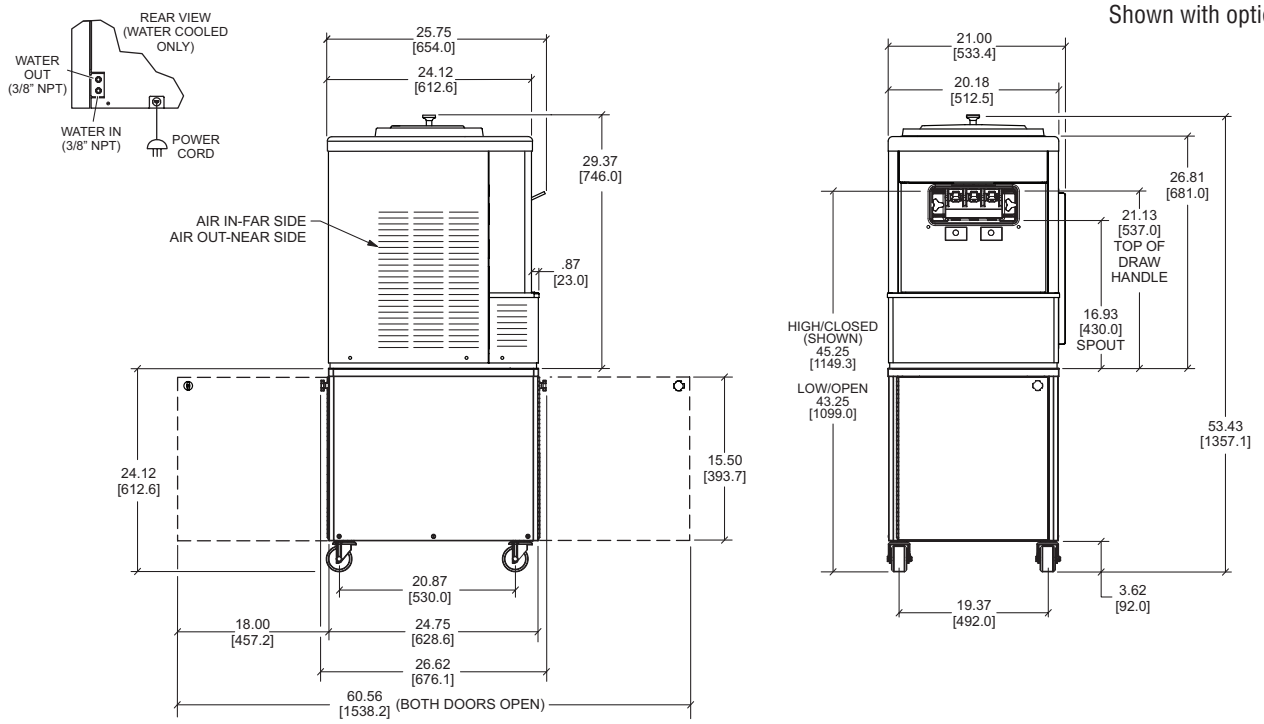

FIGURES IN BRACKETS INDICATE MILLIMETERS / DECIMAL AND FRACTIONAL DIMENSIONS EQUAL TO (PLUS OR MINUS 1/16 INCH [1.5mm]).

Weights	lbs.	kgs.
Net	305	138.3
Crated	350	158.8
	cu. ft.	**cu. m.**
Volume	22.3	0.63

Dimensions	in.	mm.
Width	21	533
Depth	25-3/4	654
Height	29-3/8	746
Counter Clearance	----	----

Designed to rest on a plastic pad directly on counter top or optional cart.

Electrical	Total Amps	Supplied with NEMACord
208-230/60/1 Air	12.0	6-15P
208-230/60/1 Water	12.0	6-15P
220-240/50/1 Air	10.0	----
220-240/50/1 Water	10.0	----

This unit may be manufactured in other electrical characteristics. Refer to the local Taylor Distributor for availability.

(For exact electrical information, always refer to the data label of the unit.)

Bidding Specs

Electrical: Volt _____ Hz _____ ph _____

Neutral: ☐Yes ☐No | **Cooling**: ☐Air ☐Water ☐NA

Options: _____

Specifications

Electrical

One dedicated electrical connection is required. See the Electrical chart for the proper electrical requirements. Manufactured to be cord connected. Consult the international Taylor distributor for cord & receptacle specifications for 50 Hz. equipment.

Beater Motor

Two, 0.5 HP

Refrigeration System

One, 3,500 BTU/hr compressor (nominal rating). R404A.
Separate Hopper Refrigeration (SHR), One, 400 BTU/hr. R134a.
(Actual BTUs will vary based on application.)

Air Cooled

Minimum Clearance: 6" (152 mm) on left and right, and 0" in the rear. Minimum air clearances must be met to assure adequate air flow for optimum performance.

Water Cooled

Water inlet and drain connections out of rear 3/8" FPT.

Options

- Cart with casters - recommended for self service to meet ADA compliant dispensing height
  Net Weight: 105 lbs. (47.6 kg
  Crated Weight: 130 lbs. (59.0 kg)
- Cone Dispenser
- Legs - [increase height of unit by 4-1/4" (108 mm)]

Continuing research results in steady improvements; therefore, these specifications are subject to change without notice.

TAYLOR
United Technologies

Taylor Company,
Rockton, Illinois 61072
815-624-8333 **800-255-0626** Fax 815-624-8000
www.taylor-company.com