Model 161

Soft Serve Freezer

Operating Instructions

Carrier
A United Technologies Company

TAYLOR®

055155-M

8/14/08

Complete this page for quick reference when service is required:

Taylor Distributor:_____

Address:_____

Phone:_____

Service:_____

Parts:_____

Date of Installation:_____

Information found on the data label:

Model Number:_____

Serial Number:_____

Electrical Specs: Voltage_____Cycle_____

Phase_____

Maximum Fuse Size:_____A

Minimum Wire Ampacity:_____A

© August, 2008 Taylor
All rights reserved.

055155-M

TAYLOR®

The word Taylor and the Crown design are registered trademarks in the United States of America and certain other countries.

Taylor Company
a division of Carrier Commercial Refrigeration, Inc.
750 N. Blackhawk Blvd.
Rockton, IL 61072

Table of Contents

Section 1 To the Installer 1

Installer Safety 1

Site Preparation 1

Air Cooled Units 1

Water Connections (Water Cooled Units Only) 2

Electrical Connections 2

Electrical Hook-Up Installation
(60 Cycle, 1 Ph, Supplied With Cord and Plug) 3

Section 2 To the Operator 4

Compressor Warranty Disclaimer 4

Section 3 Safety 5

Section 4 Operator Parts Identification 7

Model 161 7

Beater Door Assembly 8

Accessories 9

Section 5 Important: To the Operator 10

Symbol Definitions 10

Section 6 Operating Procedures 13

Assembly 13

Sanitizing 16

Priming 18

Closing Procedure 18

Draining Product From the Freezing Cylinder 18

Rinsing 19

Cleaning 19

Disassembly 19

Brush Cleaning 19

Section 7 Important: Operator Checklist 21
During Cleaning and Sanitizing 21
Troubleshooting Bacterial Count 21
Regular Maintenance Checks 21
Winter Storage 22
Section 8 Troubleshooting Guide 23
Section 9 Parts Replacement Schedule 26
Section 10 Parts List 27
Wiring Diagrams 34

Note: Continuing research results in steady improvements; therefore, information in this manual is subject to change without notice.

© August, 2008Taylor
All rights reserved.
055155-M

TAYLOR®

The word Taylor and the Crown design are registered trademarks in the United States of America and certain other countries.

Taylor Company
a division of Carrier Commercial Refrigerati
750 N. Blackhawk Blvd.
Rockton, IL 61072

Section 1 To the Installer

The following are general installation instructions. For complete installation details, please see the check out card.

Installer Safety

In all areas of the world, equipment should be installed in accordance with existing local codes. Please contact your local authorities if you have any questions.

Care should be taken to ensure that all basic safety practices are followed during the installation and servicing activities related to the installation and service of Taylor equipment.

- Only authorized Taylor service personnel should perform installation and repairs on the equipment.
- Authorized service personnel should consult OSHA Standard 29CFRI910.147 or the applicable code of the local area for the industry standards on lockout/tagout procedures before beginning any installation or repairs.
- Authorized service personnel must ensure that the proper PPE is available and worn when required during installation and service.
- Authorized service personnel must remove all metal jewelry, rings, and watches before working on electrical equipment.

The main power supply(s) to the freezer must be disconnected prior to performing any repairs. Failure to follow this instruction may result in personal injury or death from electrical shock or hazardous moving parts as well as poor performance or damage to the equipment.

Note: All repairs must be performed by an authorized Taylor Service Technician.

This unit has many sharp edges that can cause severe injuries.

Site Preparation

Review the area the unit is to be installed in before uncrating the unit, making sure that all possible hazards the user or equipment may come into have been addressed.

For Indoor Use Only: This unit is designed to operate indoors, under normal ambient temperatures of 70°-75°F (21°-24°C). The freezer has successfully performed in high ambient temperatures of 104°(40°C) at reduced capacities.

This unit must **NOT** be installed in an area where a water jet or hose can be used. **NEVER** use a water jet or hose to rinse or clean the unit. Failure to follow this instruction may result in electrocution.

This unit must be installed on a level surface to avoid the hazard of tipping. Extreme care should be taken in moving this equipment for any reason. Two or more persons are required to safely move this unit. Failure to comply may result in personal injury or equipment damage.

Uncrate the unit and inspect it for damage. Report any damage to your Taylor Distributor.

This piece of equipment is made in the USA and has USA sizes of hardware. All metric conversions are approximate and vary in size.

Air Cooled Units

DO NOT obstruct air intake and discharge openings:

The Model 161 requires 6” (152 mm) on both sides, and 0” at the rear. Install the skirt provided on the right side of the unit. Minimum air clearances must be met to assure adequate air flow for optimum performance.

Water Connections

(Water Cooled Units Only)

An adequate cold water supply must be provided with a hand shut-off valve. On the underside rear of the base pan, two 3/8" I.P.S. water connections for inlet and outlet have been provided for easy hook-up. 1/2" inside diameter water lines should be connected to the machine. (Flexible lines are recommended, if local codes permit.) Depending on local water conditions, it may be advisable to install a water strainer to prevent foreign substances from clogging the automatic water valve. There will be only one water "in" and one water "out" connection. DO NOT install a hand shut-off valve on the water "out" line! Water should always flow in this order: first, through the automatic water valve; second, through the condenser; and third, through the outlet fitting to an **open trap drain.**

A back flow prevention device is required on the incoming water connection side. Please refer to the applicable National, State, and local codes for determining the proper configuration.

Electrical Connections

Each freezer requires one power supply for each data label. Check the data label on the freezer for fuse, circuit ampacity and electrical specifications. Refer to the wiring diagram provided inside of the control box, for proper power connections.

In the United States, this equipment is intended to be installed in accordance with the National Electrical Code (NEC), ANSI/NFPA 70-1987. The purpose of the NEC code is the practical safeguarding of persons and property from hazards arising from the use of electricity. This code contains provisions considered necessary for safety. Compliance therewith and proper maintenance will result in an installation essentially free from hazard!

In all other areas of the world, equipment should be installed in accordance with the existing local codes. Please contact your local authorities.

FOLLOW YOUR LOCAL ELECTRICAL CODES!

CAUTION: THIS EQUIPMENT MUST BE PROPERLY GROUNDED! FAILURE TO DO SO CAN RESULT IN SEVERE PERSONAL INJURY FROM ELECTRICAL SHOCK!

This unit is provided with an equipotential grounding lug that is to be properly attached to the rear of the frame by the authorized installer. The installation location is marked by the equipotential bonding symbol (5021 of IEC 60417-1) on both the removable panel and the equipments frame.

- Stationary appliances which are not equipped with a power cord and a plug or another device to disconnect the appliance from the power source must have an all-pole disconnecting device with a contact gap of at least 3mm installed in the external installation.
- Appliances that are permanently connected to fixed wiring and for which leakage currents may exceed 10 mA, particularly when disconnected or not used for long periods, or during initial installation, shall have protective devices such as a GFI, to protect against the leakage of current, installed by the authorized personnel to the local codes.
- Supply cords used with this unit shall be oil-resistant, sheathed flexible cable not lighter than ordinary polychloroprene or other equivalent synthetic elastomer-sheathed cord (Code designation 60245 IEC 57) installed with the proper cord anchorage to relieve conductors from strain, including twisting, at the terminals and protect the insulation of the conductors from abrasion.

Electrical Hook-Up Installation

(60 Cycle, 1 Ph, Supplied With Cord and Plug)

This freezer is supplied with a 3-wire cord and grounding type plug for connection to a single phase, 60 cycle, branch circuit supply. This unit must be plugged into a properly grounded receptacle. The cord and plug provided for 208/230/60/1, is 20A; therefore the wall outlet must also be 20A. Check the data label, located on the side panel, for electrical specifications.

Permanent wiring may be employed if required by local codes. Instructions for conversion to permanent wiring are as follows:

1. Be sure the freezer is electrically disconnected.
2. Remove the appropriate panel and locate the small electrical box at the base of the freezer.
3. Remove the factory-installed cord and strain relief bushing.
4. Route incoming permanent wiring through 7/8" (22 mm) hole in base pan.
5. Connect two power supply leads. Attach ground (earth) wire to the grounding lug inside the electrical box.
6. Be sure the unit is properly grounded before applying power.

Beater Rotation

Beater rotation must be clockwise as viewed looking into the freezing cylinder.

Note: The following procedures should be performed by a trained service technician.

To correct rotation on a three-phase unit, interchange any two incoming power supply lines at freezer main terminal block only. To correct rotation on a single-phase unit, change the leads inside the beater motor. (Follow diagram printed on motor.)

Electrical connections are made directly to the terminal block provided in the splice boxes which are mounted mid-level on the frame channel on the sides of the freezer.

Refrigerant

In consideration of our environment, Taylor proudly uses only earth friendly HFC refrigerants. The HFC refrigerant used in this unit is R404A. This refrigerant is generally considered non-toxic and non-flammable, with an Ozone Depleting Potential (ODP) of zero (0).

However, any gas under pressure is potentially hazardous and must be handled with caution.

NEVER fill any refrigerant cylinder completely with liquid. Filling the cylinder to approximately 80% will allow for normal expansion.

Refrigerant liquid sprayed onto the skin may cause serious damage to tissue. Keep eyes and skin protected. If refrigerant burns should occur, flush immediately with cold water. If burns are severe, apply ice packs and contact a physician immediately.

Taylor reminds technicians to be cautious of government laws regarding refrigerant recovery, recycling, and reclaiming systems. If you have any questions regarding these laws, please contact the factory Service Department.

WARNING: R404A refrigerant used in conjunction with polyolester oils is extremely moisture absorbent. When opening a refrigeration system, the maximum time the system is open must not exceed 15 minutes. Cap all open tubing to prevent humid air or water from being absorbed by the oil.

Section 2 To the Operator

The Model 161 soft serve freezer has been carefully engineered and manufactured to give you dependable operation.

This unit, when properly operated and cared for, will produce a consistent quality product. Like all mechanical products, it will require cleaning and maintenance. A minimum amount of care and attention is necessary if the operating procedures outlined in this manual are followed closely.

This Operator's Manual should be read before operating or performing any maintenance on your equipment.

The Model 161 will NOT eventually compensate and correct for any errors during the set-up or filling operations. Thus, the initial assembly and priming procedures are of extreme importance. It is strongly recommended that personnel responsible for the equipment's operation, both assembly and disassembly, go through these procedures together in order to be properly trained and to make sure that no misunderstandings exist.

In the event you should require technical assistance, please contact your local authorized Taylor Distributor.

Note: Warranty is valid only if the parts are authorized Taylor parts, purchased from an authorized Taylor Distributor, and the required service work is provided by an authorized Taylor service technician. Taylor reserves the right to deny warranty claims on equipment or parts if non-approved parts or refrigerant were installed in the machine, system modifications were performed beyond factory recommendations, or it is determined that the failure was caused by neglect or abuse.

If the crossed out wheeled bin symbol is affixed to this product, it signifies that this product is compliant with the EU Directive as well as other similar legislation in effect after August 13, 2005. Therefore, it must be collected separately after its use is completed, and cannot be disposed as unsorted municipal waste.

The user is responsible for returning the product to the appropriate collection facility, as specified by your local code.

For additional information regarding applicable local laws, please contact the municipal facility and/or local distributor.

Compressor Warranty Disclaimer

The refrigeration compressor(s) on this machine are warranted for the term indicated on the warranty card accompanying this machine. However, due to the Montreal Protocol and the U.S. Clean Air Act Amendments of 1990, many new refrigerants are being tested and developed, thus seeking their way into the service industry. Some of these new refrigerants are being advertised as drop-in replacements for numerous applications. It should be noted that, in the event of ordinary service to this machine's refrigeration system, **only the refrigerant specified on the affixed data label should be used**. The unauthorized use of alternate refrigerants will void your compressor warranty. It will be the owner's responsibility to make this fact known to any technician he employs.

It should also be noted that Taylor does not warrant the refrigerant used in its equipment. For example, if the refrigerant is lost during the course of ordinary service to this machine, Taylor has no obligation to either supply or provide its replacement either at billable or unbillable terms. Taylor does have the obligation to recommend a suitable replacement if the original refrigerant is banned, obsoleted, or no longer available during the five year warranty of the compressor.

The Taylor Company will continue to monitor the industry and test new alternates as they are being developed. Should a new alternate prove, through our testing, that it would be accepted as a drop-in replacement, then the above disclaimer would become null and void. To find out the current status of an alternate refrigerant as it relates to your compressor warranty, call the local Taylor Distributor or the Taylor Factory. Be prepared to provide the Model/Serial Number of the unit in question.

Section 3 Safety

We at Taylor Company are concerned about the safety of the operator when he or she comes in contact with the freezer and its parts. Taylor has gone to extreme efforts to design and manufacture built-in safety features to protect both you and the service technician. As an example, warning labels have been attached to the freezer to further point out safety precautions to the operator.

IMPORTANT - Failure to adhere to the following safety precautions may result in severe personal injury. Failure to comply with these warnings may damage the machine and its components. Component damage will result in part replacement expense and service repair expense.

To Operate Safely:

DO NOT operate the freezer without reading the Operator Manual. Failure to follow this instruction may result in equipment damage, poor freezer performance, health hazards, or personal injury.

This equipment is provided with a grounding lug that is to be properly attached to the rear of the frame by the authorized installer. The installation location is marked by the equipotential bonding symbol (5021 of IEC 60417-1) on the removable panel and the frame.

- **DO NOT** operate the freezer unless it is properly grounded.
- **DO NOT** operate the freezer with larger fuses than specified on the freezer data label.
- **DO NOT** attempt any repairs unless the main power supply to the freezer has been disconnected.
- Appliances that are permanently connected to fixed wiring and for which leakage currents may exceed 10 mA, particularly when disconnected or not used for long periods, or during initial installation, shall have protective devices such as a GFI, to protect against the leakage of current, installed by the authorized personnel to the local codes.
- Supply cords used with this unit shall be oil-resistant, sheathed flexible cable not lighter than ordinary polychloroprene or other equivalent synthetic elastomer-sheathed cord (Code designation 60245 IEC 57) installed with the proper cord anchorage to relieve conductors from strain, including twisting, at the terminals and protect the insulation of the conductors from abrasion.

Failure to follow these instructions may result in electrocution. Contact your local authorized Taylor Distributor for service.

DO NOT use a water jet to clean or rinse the freezer. Failure to follow these instructions may result in serious electrical shock.

- **DO NOT** allow untrained personnel to operate this machine.
- **DO NOT** put objects or fingers in door spout.
- **DO NOT** operate the freezer unless all service panels and access doors are restrained with screws.
- **DO NOT** remove the freezer door or beater assembly unless the control switches are in the “OFF” position.

Failure to follow these instructions may result in severe personal injury from hazardous moving parts.

- **DO NOT** put objects or fingers in fill or discharge openings. Failure to follow this instruction may result in contaminated product or personal injury from blade contact.
- **USE EXTREME CAUTION** when removing the beater assembly. The scraper blades are very sharp and may cause injury.

DO NOT obstruct air intake and discharge openings: A minimum of 6” (152 mm) on both sides, and 0” in the rear is required. Install the skirt provided on the right side of the unit. Failure to follow this instruction may cause poor freezer performance and damage to the machine.

This freezer must be placed on a level surface. Failure to comply may result in personal injury or equipment damage.

This freezer is designed to operate indoors, under normal ambient temperatures of 70°-75°F (21°-24°C). The freezer has successfully performed in high ambient temperatures of 104°F (40°C) at reduced capacity.

NOISE LEVEL: Airborne noise emission does not exceed 78 dB(A) when measured at a distance of 1.0 meter from the surface of the machine and at a height of 1.6 meters from the floor.

Section 4 Operator Parts Identification

Model 161

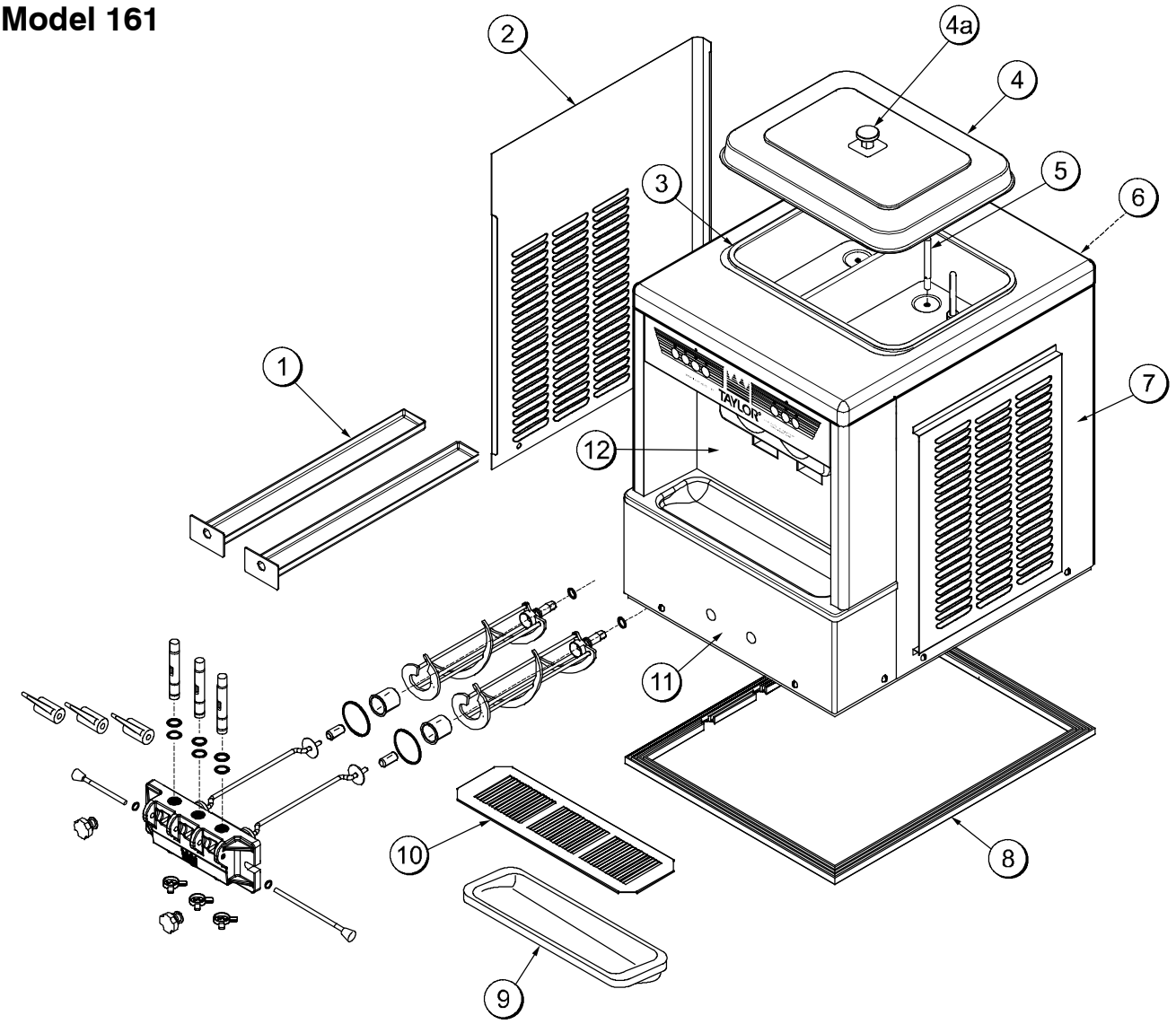

Figure 1

ITEM	DESCRIPTION	PART NO.
1	PAN-DRIP *161*	055206
2	PANEL -SIDE LEFT	058491
3	GASKET-HOPPER COVER	037042
4	COVER A.-HOPPER	X37963-SER
4a	KNOB-MIX COVER	025429
5	TUBE-FEED	030797
6	PANEL-REAR	058492

ITEM	DESCRIPTION	PART NO.
7	PANEL A.-SIDE-RIGHT	X58490
8	GASKET-BASE PAN	055815
9	TRAY-DRIP 16-7/8L X 4-5/16	020157-SP
10	SHIELD-SPLASH	022765
11	PANEL-LOWER FRONT	058493
12	PANEL A.-FRONT *161*	X58488

Beater Door Assembly

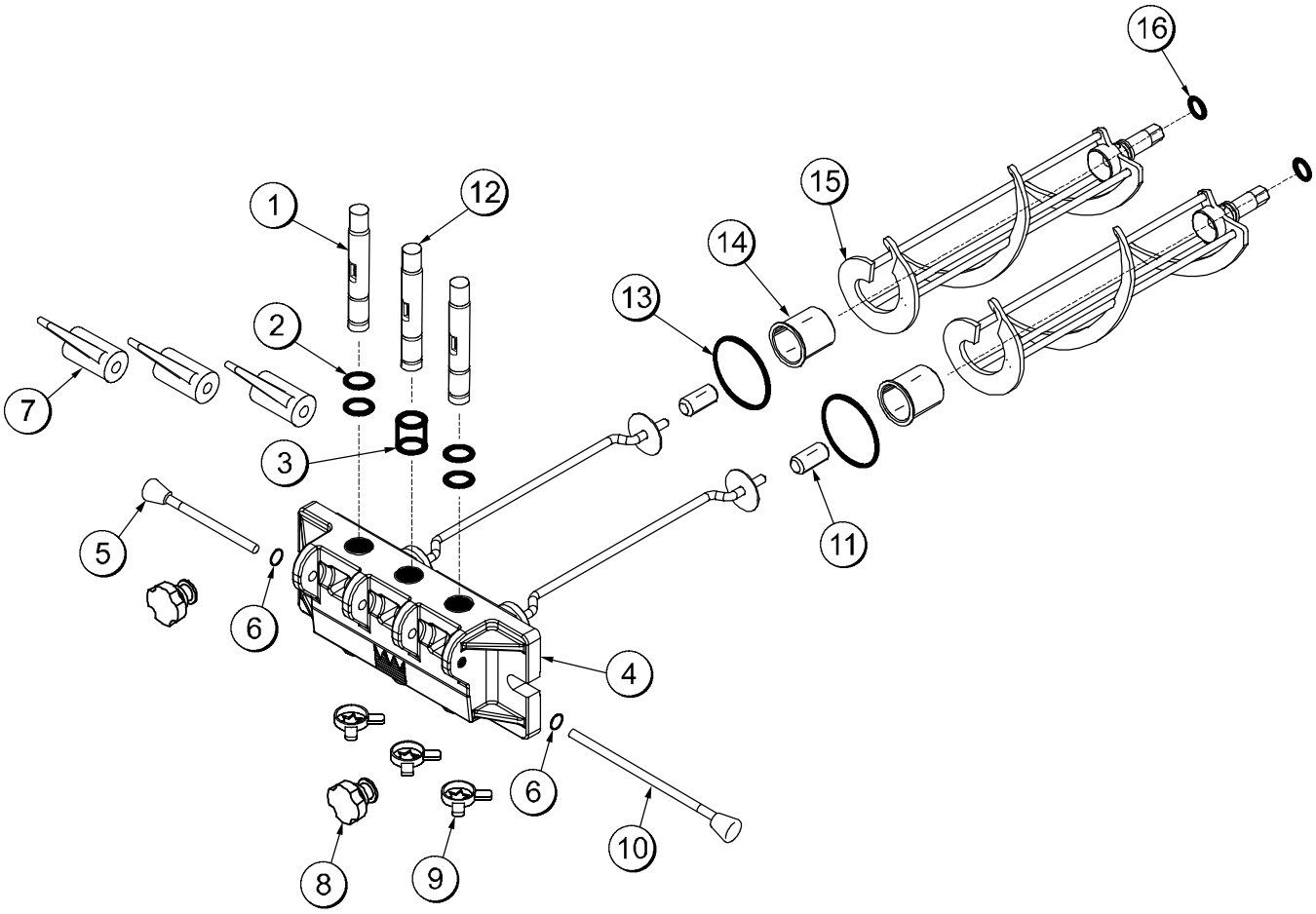

Figure 2

ITEM	DESCRIPTION	PART NO.
1	DRAW VALVE	024763
2	O-RING 7/8 OD X .103 W	014402
3	SEAL-VALVE	030930
4	KIT A.-DOOR 3 SPT 1.5 QT	X56906SER1
5	PIVOT PIN A.-SHORT	X38539
6	O-RING 5/16 OD X .070 W	016272
7	DRAW VALVE HANDLE	030564
8	NUT-STUD	056802

ITEM	DESCRIPTION	PART NO.
9	DESIGN CAP	014218
10	PIVOT PIN A.-LONG	X38538
11	GUIDE BEARING	014496
12	CENTER DRAW VALVE	031164
13	O-RING 2-3/4 OD X .139 W	019998
14	FRONT BEARING	023262
15	BEATER ASSEMBLY	X24689
16	O-RING-13/16 OD X .139 W	021278

Accessories

Figure 3

ITEM	DESCRIPTION	PART NO.
1	PAIL-6·QT.	023348
2	BRUSH-REAR BRG 1” D X 2” LG	013071
3	BRUSH-DOUBLE·ENDED	013072
4	BRUSH-DRAW·VALVE·1” OD X 2” X 17”	013073

ITEM	DESCRIPTION	PART NO.
5	BRUSH-MIX·PUMP·BODY-3”X7” WHITE	023316
6	LUBRICANT-TAYLOR·4·OZ.	047518
7	KIT·A.-TUNE·UP	X31167
*	SANITIZER KAY-5 125 PKTS	041082

*NOT SHOWN

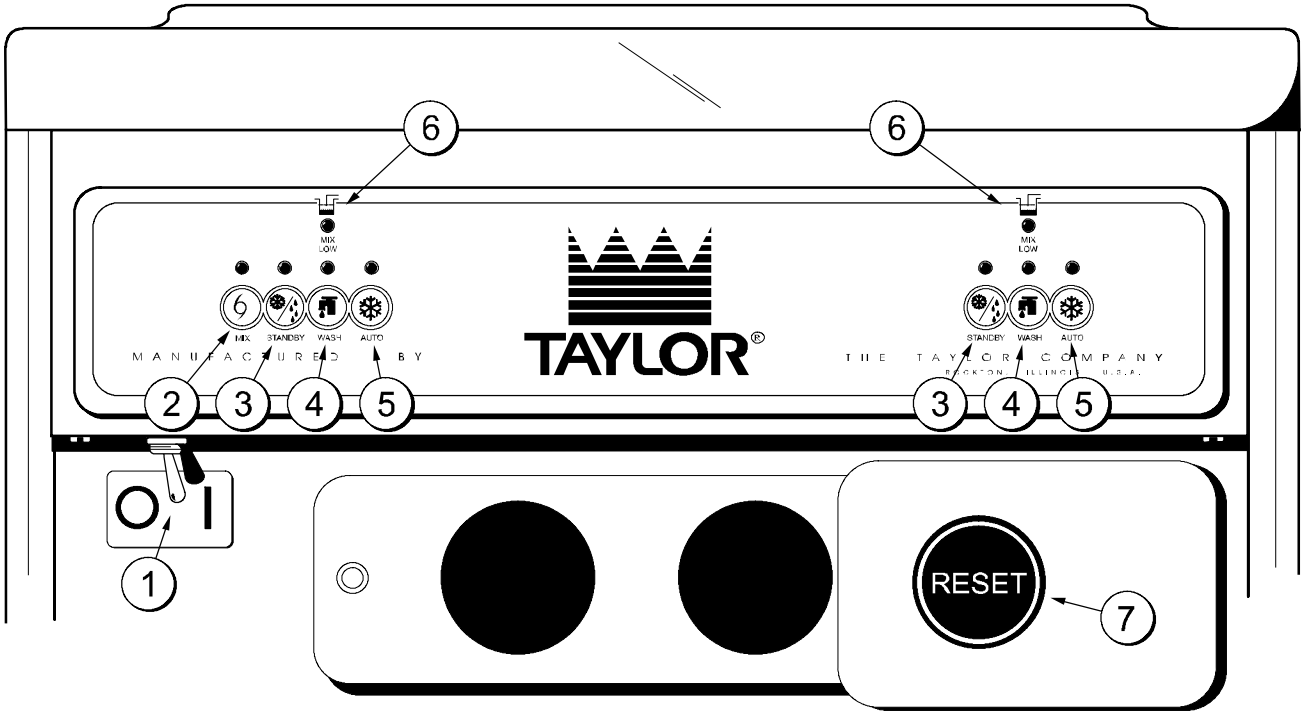

Figure 4

ITEM	DESCRIPTION
1	POWER SWITCH
2	MIX REFRIGERATION KEY
3	STANDBY KEY
4	WASH KEY
5	AUTO KEY
6	INDICATOR LIGHT “MIX LOW”
7	RESET BUTTON

Symbol Definitions

To better communicate in the International arena, the words on many of our operator switches and keys have symbols to indicate their functions. Your Taylor equipment is designed with these International symbols.

The following chart identifies the symbol definitions used on the operator switches.

= OFF

= ON

= MIX

= STANDBY

= WASH

= AUTO

= MIX LOW

Power Switch

When placed in the ON position, the power switch allows Softech™ control panel operation.

MIX REF

When the MIX REF key is pressed, the light comes on indicating the mix hopper refrigeration system is operating. MIX REF is controlled by the left side of the freezer as viewed from the operator end. The MIX REF function cannot be cancelled unless the AUTO or STANDBY modes are cancelled first.

STANDBY Key

The Separate Hopper Refrigeration System (SHR) and the Cylinder Temperature Retention System (CTR) are standard features on Softech™ machines. The SHR incorporates the use of a separate small refrigeration system. This maintains the mix in the hopper below 40°(4.4°C) to assure bacteria control. The CTR works with the SHR to maintain a good quality product. During long "No Sale" periods, it is necessary to warm the product in the freezing cylinder to approximately 35°F to 40°F (1.7°C to 4.4°C) to prevent over-beating and product breakdown.

To activate the SHR and CTR, press the STANDBY key. Place the end of the feed tube without the hole into the mix inlet hole.

When the STANDBY key is pressed, the light comes on, indicating the CTR (Cylinder Temperature Retention System) has been activated. In the STANDBY mode, the WASH and AUTO functions are automatically cancelled. The MIX REF function is automatically locked in to maintain the mix in the hopper.

To resume normal operation, press the AUTO key. When the unit cycles off, the product in the freezing cylinder will be at serving viscosity. At this time, place the orifice end of the feed tube into the mix inlet hole. Install the air orifice.

WASH Key

When the WASH key is pressed, the light comes on. This indicates beater motor operation. The STANDBY or AUTO modes must be cancelled first to activate the WASH mode.

AUTO Key

When the AUTO key is pressed, the light comes on. This indicates that the main refrigeration system has been activated. In the AUTO mode, the WASH or STANDBY functions are automatically cancelled. The MIX REF function is automatically locked in to maintain the temperature of the mix in the mix hopper.

Note: An indicating light and an audible tone will sound whenever a mode of operation has been pressed. To cancel any function, press the key again. The light and mode of operation will shut off.

Indicator Light - MIX LOW

Located on the front of the machine is a mix level indicating light. When the light is flashing, it indicates that the mix hopper has a low supply of mix and should be refilled as soon as possible. Always maintain at least 3" (76 mm) of mix in the hopper. If you neglect to add mix, a freeze-up may occur. This will cause eventual damage to the beater, blades, drive shaft, and freezer door.

Reset Button

The reset button is located on the front of the unit. The reset protects the beater motor from an overload condition. If an overload occurs, the reset mechanism will trip. To properly reset the freezer, press the AUTO key to cancel the cycle. Turn the power switch to the OFF position. Press the reset button firmly.

Warning: Do not use metal objects to press the reset button. Failure to comply may result in severe personal injury or death.

Turn the power switch to the ON position. Press the WASH key and observe the freezer's performance. Open the side access panel. Make sure the beater motor is turning the drive shaft in a clockwise direction (from the operator end) without binding.

If the beater motor is turning properly, press the WASH key to cancel the cycle. Press the AUTO key on both sides of the unit to resume normal operation. If the freezer shuts down again, contact a service technician.

Feed Tube

The feed tube serves two purposes. One end of the tube has an orifice (hole) and the other end does not.

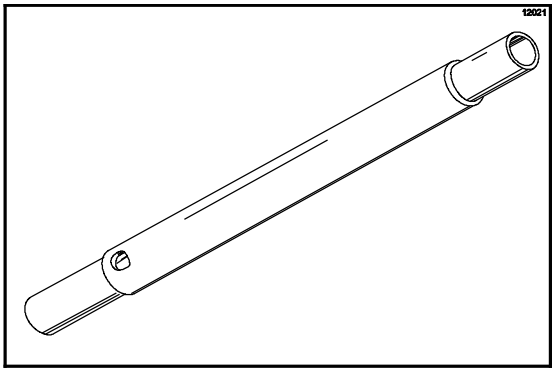

Figure 5

1. After priming the machine, place the orifice end of the feed tube into the mix inlet hole. Every time the draw handle is raised, new mix and air from the hopper will flow down into the freezing cylinder. This will keep the freezing cylinder properly loaded and will maintain overrun.
2. During long “No Sale” periods, remove the feed tube. Place the end of the feed tube without the orifice into the mix inlet hole. This will prevent any mix from entering the freezing cylinder.

   The feed tube maintains overrun and allows enough mix to enter the freezing cylinder after a draw.

Section 6 Operating Procedures

The Model 161 is a soft serve counter model with a three spout door. Two individual flavors are available from the end spouts, and an equal combination of both is dispensed through the center spout to create a twist effect. It has a 1.5 quart (1.4 liter) capacity freezing cylinder. The mix flows by gravity from the hopper to the freezing cylinder through a feed tube.

Duplicate the procedures where they apply for the second freezing cylinder.

We begin our instructions at the point where we enter the store in the morning and find the parts disassembled and laid out to air dry from the previous night's cleaning.

These opening procedures will show you how to assemble these parts into the machine, sanitize them, and prime the machine with fresh mix in preparation to serve your first portion.

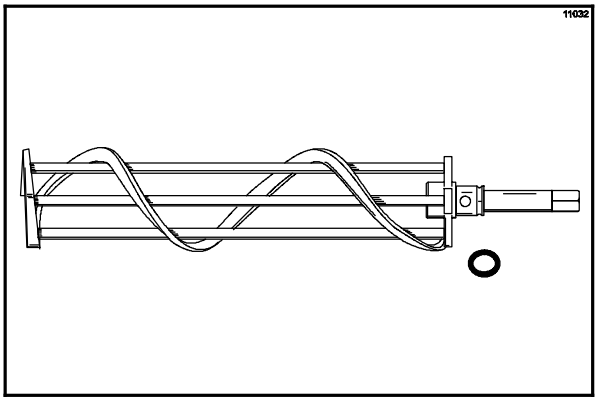

Figure 6

If you are disassembling the machine for the first time or need information to get to the starting point in our instructions, turn to page 19, "Disassembly", and start there.

Assembly

Note: When lubricating parts, use an approved food grade lubricant (example: Taylor Lube).

Step 1
To install the beater assembly, slide the small, thick o-ring into the groove on the drive shaft of the beater assembly. Apply an even coat of lubricant to the o-ring and the shaft. **DO NOT** lubricate the hex end.

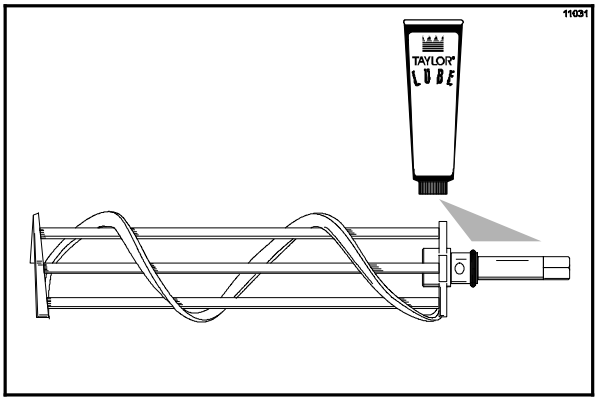

Figure 7

Step 2
Insert the beater assembly through the rear shell bearing at the back of the freezing cylinder and engage the hex end firmly into the female socket. When properly seated, the beater will not protrude beyond the front of the freezing cylinder.

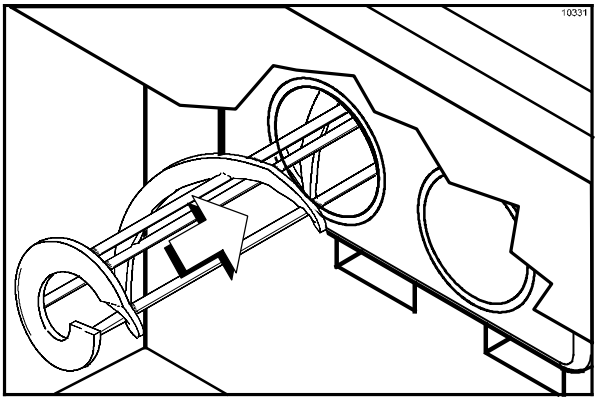

Figure 8

Repeat Steps 1 through 2 for the other side of the machine.

Step 3
Place the large o-rings into the grooves on the back of the machine door and lubricate.

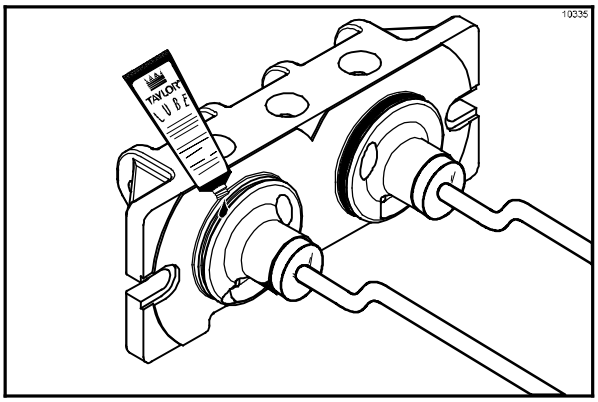

Figure 9

Step 4
Slide the front bearings over the baffle rods so the flanged edge is against the door. Place the white plastic guide bearings on the end of the baffle rods. **DO NOT** lubricate the front bearings or the guide bearings.

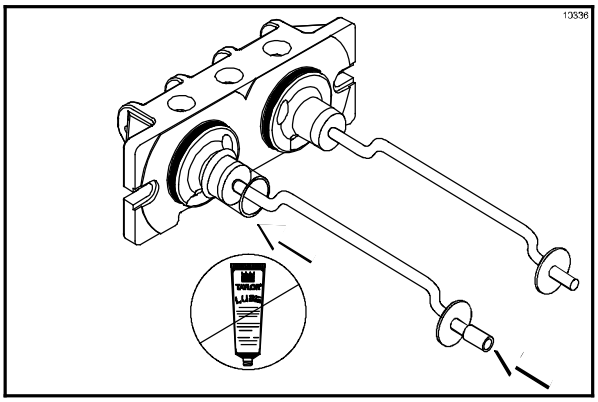

Figure 10

Step 5
Slide the slotted portion of the handscrews into the slots in the freezer door.

Step 6
With both hands, hold the sides of the freezer door and insert the baffle rods into the center of the beater assemblies. The white guide bearings must fit securely in the holes of the drive shafts. Finger-tighten the handscrews equally to insure that the door is snug. **Do not over-tighten.**

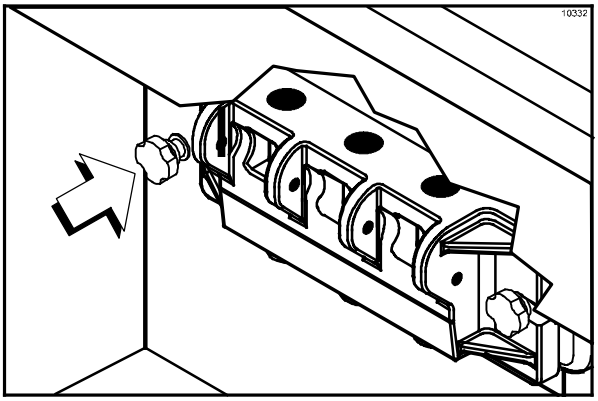

Figure 11

Note: The freezer door is in the correct position when the door spouts are on the bottom.

Step 7
Install the valve seal into the grooves on the center draw valve and lubricate. This special seal will prevent the mix in one freezing cylinder from traveling into the second cylinder.

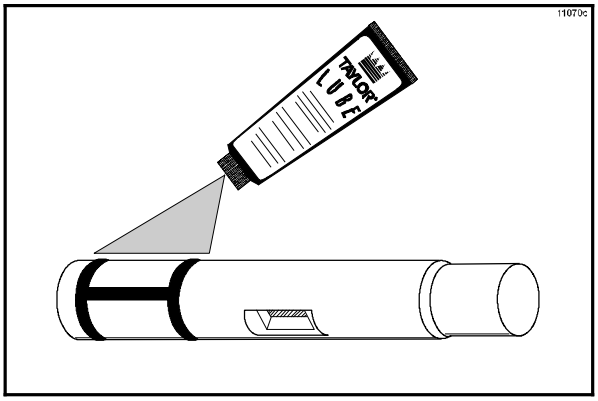

Figure 12

Step 8
Slide the two o-rings into the grooves on the remaining draw valves and lubricate.

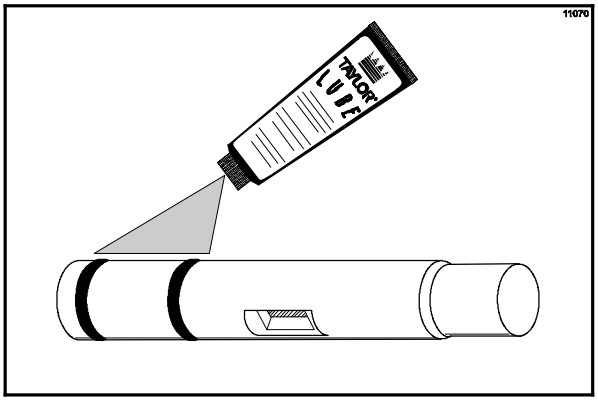

Figure 13

Step 9
Lubricate the inside of the freezer door spouts from the **bottom**. Insert the draw valves into the freezer door from the **bottom** until the slot in the draw valves comes into view.

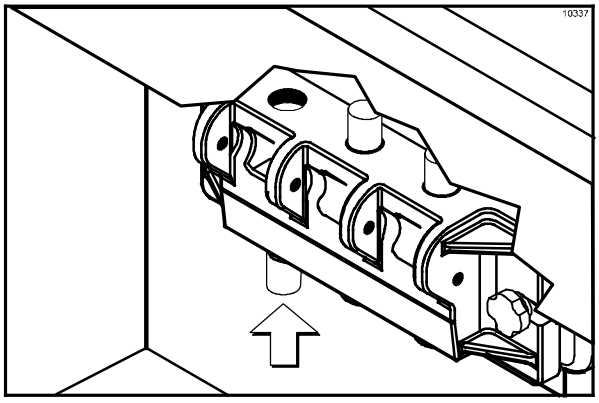

Figure 14

Step 10
Slide the o-ring onto each pivot pin and lubricate.

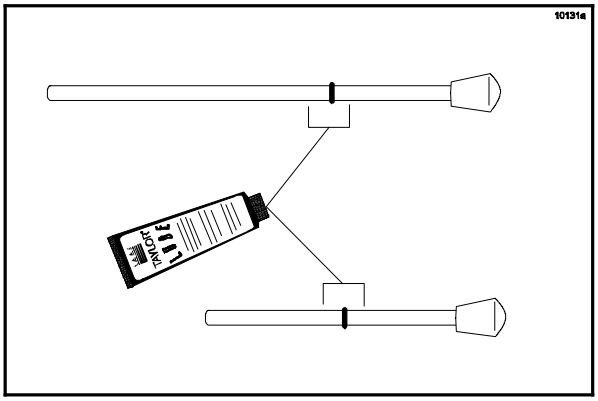

Figure 15

Step 11
Slide the tip of the draw handle into the slot of the draw valve, starting from the right. Slide the short pivot pin through the far right draw handle. Slide the long pivot pin through the far left and middle draw handles.

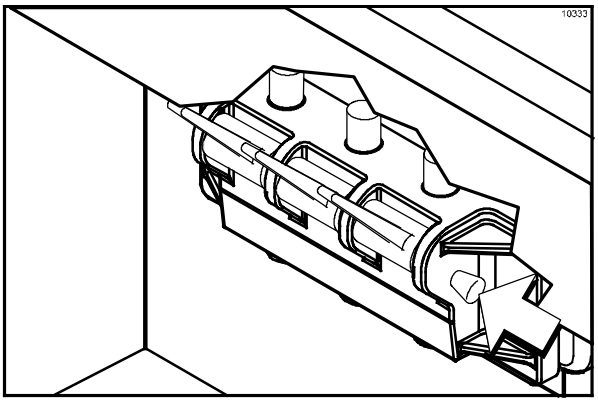

Figure 16

Step 12
Snap the design caps over the bottom of the freezer door spouts.

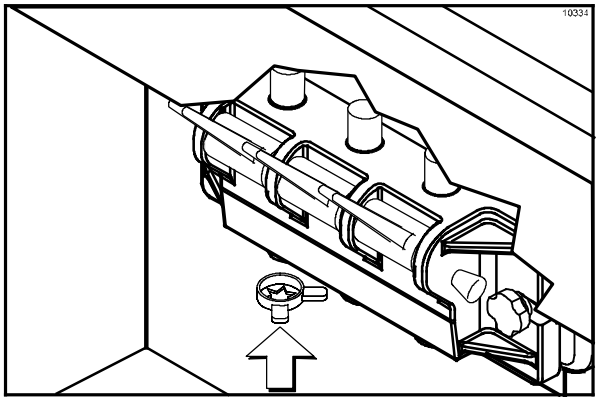

Figure 17

Step 13
Lay the feed tubes in the bottom of the mix hoppers.

Step 14
Install the front drip tray and splash shield under the freezer door.

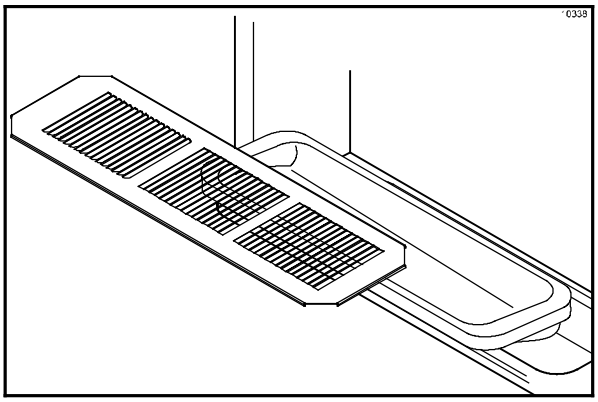

Figure 18

Step 15
Install the drip pans.

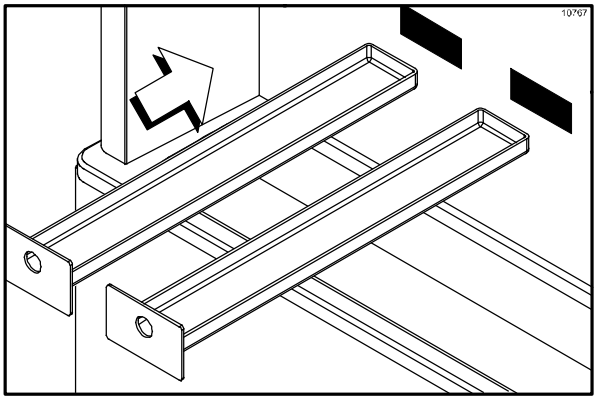

Figure 19

Sanitizing

Step 1
Prepare an approved 100 PPM sanitizing solution (examples: 2-1/2 gal. [9.5 liters] of Kay-5® or 2 gal. [7.6 liters] of Stera-Sheen®). USE WARM WATER AND FOLLOW THE MANUFACTURER'S SPECIFICATIONS.

Step 2
Pour **one gallon** (3.8 liters) of sanitizing solution into the hopper and allow it to flow into the freezing cylinder.

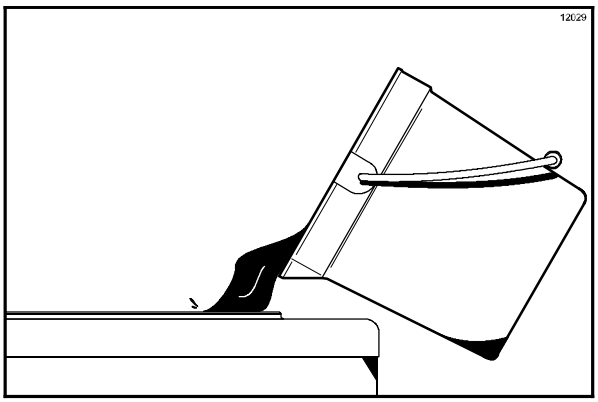

Figure 20

Step 3
While the solution is flowing into the freezing cylinder, brush clean the mix hopper, the mix inlet hole, and the feed tube.

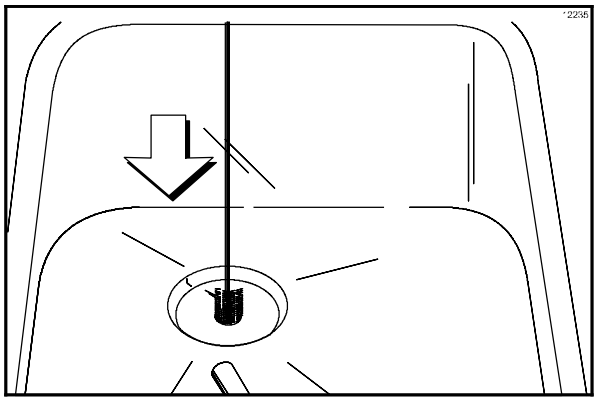

Figure 21

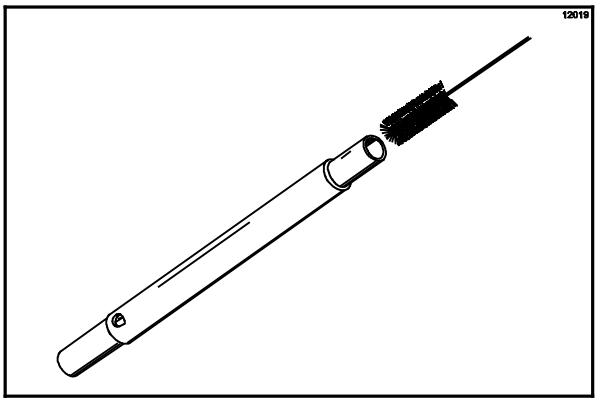

Figure 22

Step 4
Place the power switch in the ON position.

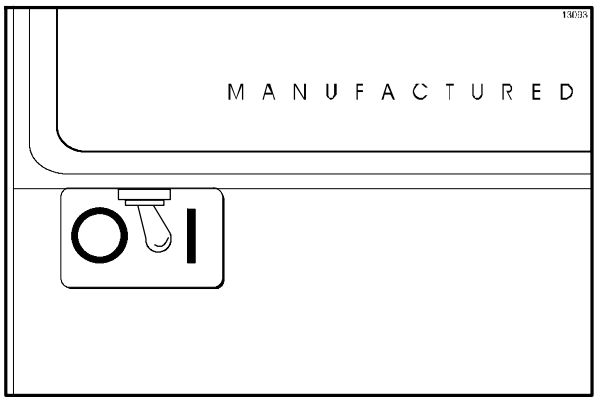

Figure 23

Step 5
Press the WASH key. This will cause the sanitizing solution in the freezing cylinder to be agitated. Allow it to agitate for five minutes.

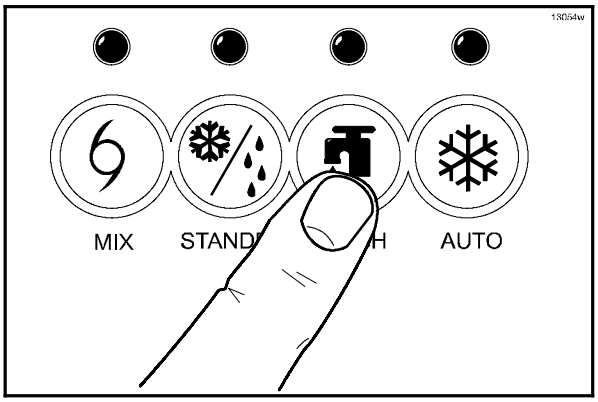

Figure 24

Step 6
Place an empty pail beneath the door spouts. Momentarily open the center draw valve to sanitize the center door spout. Open the remaining draw valves to remove all of the sanitizing solution. When the sanitizer stops flowing from the door spouts, close the draw valves. Press the WASH key to cancel the WASH mode.

Step 7
With sanitized hands, stand the feed tube in the corner of the mix hopper.

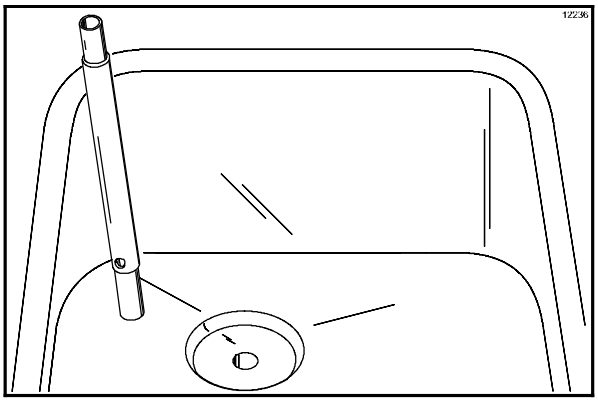

Figure 25

Repeat Steps 1 through 7 for the other side of the machine.

Priming

Prime the machine as close as possible to the time of first product draw.

Step 1
With a pail beneath the door spouts, open the draw valves. Fill the mix hopper with FRESH mix and allow it to flow into the freezing cylinder. This will force out any remaining sanitizing solution. When full strength mix is flowing from the door spouts, close the draw valves.

Note: Use only fresh mix when priming the machine.

Step 2
When the mix has stopped bubbling down into the freezing cylinder, install the feed tube in the mix inlet hole.

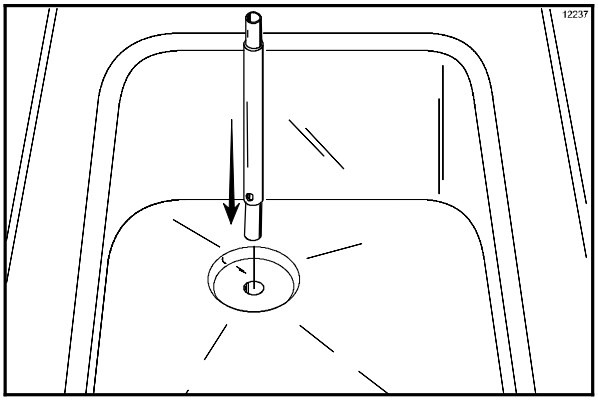

Figure 26

Step 3
Press the AUTO key. When the unit cycles off, the product will be ready to serve.

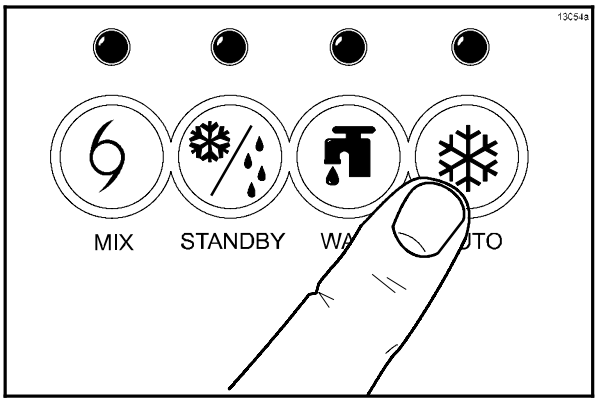

Figure 27

Repeat Steps 1 through 3 for the other side of the machine.

Step 4
Place the mix hopper gasket and the mix hopper cover in position.

Closing Procedure

To disassemble the Model 161, the following items will be needed:

- Two cleaning pails
- Sanitized stainless steel rerun can with lid
- Necessary brushes (provided with machine)
- Cleaner
- Single service towels

Draining Product From the Freezing Cylinder

Step 1
Press the AUTO key to cancel operation. Press the MIX REF key to cancel hopper refrigeration. These operations should be cancelled as far ahead of cleaning time as possible. This will allow frozen product to soften for easier cleaning.

Step 2
Remove the mix hopper cover, the mix hopper gasket, and the feed tube. Take them to the sink for cleaning.

Step 3
If local health codes permit the use of rerun, place a sanitized, NSF approved stainless steel rerun container beneath the door spouts. Press the WASH key and open the draw valves. When all the product stops flowing from the door spouts, close the draw valves and press the WASH key to cancel the WASH mode. Place the sanitized lid on the rerun container and place it in the walk-in cooler.

Note: If local health codes DO NOT permit the use of rerun, the product must be discarded. Follow the instructions in the previous step, except drain the product into a mix pail and properly discard the mix.

ALWAYS FOLLOW LOCAL HEALTH CODES.

Repeat Steps 1 through 3 for the other side of the machine.

080925

Rinsing

Step 1
Pour one gallon (3.8 liters) of **cool**, clean water into the mix hopper. With the brushes provided, scrub the mix hopper, and the mix inlet hole.

Step 2
With a pail beneath the door spouts, press the WASH key and open the draw valves.

Step 3
Drain all the rinse water from the freezing cylinder. When the rinse water stops flowing from the door spout, close the draw valves and press the WASH key to cancel.

Repeat this procedure until the rinse water being drawn from the freezing cylinder is **clear**.

Repeat Steps 1 through 3 for the other side of the machine.

Cleaning

Step 1
Prepare an approved 100 PPM cleaning solution (examples: 2-1/2 gal. [9.5 liters] of Kay-5® or 2 gal. [7.6 liters] of Stera-Sheen®). USE WARM WATER AND FOLLOW THE MANUFACTURER'S SPECIFICATIONS.

Step 2
Pour **one gallon (3.8 liters)** of cleaning solution into the mix hopper and allow it to flow into the freezing cylinder.

Step 3
While the solution is flowing into the freezing cylinder, brush clean the mix hopper and the mix inlet hole.

Step 4
Press the WASH key. This will cause the cleaning solution in the freezing cylinder to agitate.

Step 5
Place an empty pail beneath the door spouts and raise the draw valve. Draw off all the cleaning solution. When the solution stops flowing from the door spouts, close the draw valves. Press the WASH key to cancel.

Repeat Steps 1 through 5 for the other side of the machine.

Disassembly

MAKE SURE THE POWER SWITCH IS IN THE "OFF" POSITION. Failure to follow this instruction may result in severe personal injury to fingers or hands from hazardous moving parts.

Step 1
Remove the handscrews and the freezer door. Remove the beater assemblies from the freezing cylinders and take these parts to the sink for cleaning.

Step 2
Remove the front drip tray, the splash shield, and the drip pans from the machine. Take them to the sink for cleaning.

Brush Cleaning

Step 1
Prepare a sink with an approved cleaning solution (examples: Kay-5® or Stera-Sheen®). USE WARM WATER AND FOLLOW THE MANUFACTURER'S SPECIFICATIONS.

IMPORTANT: Follow label directions, as too STRONG of a solution can cause parts damage, while too MILD of a solution will not provide adequate cleaning.) Make sure all brushes provided with the machine are available for brush cleaning.

Step 2
Remove the o-rings from the drive shafts of the beater assemblies.

Note: To remove the o-rings, use a single service towel to grasp the o-ring. Apply pressure in an upward direction until the o-ring pops out of its groove. With the other hand, push the top of the o-ring forward, and it will roll out of the groove and can be easily removed. If there is more than one o-ring to be removed, always remove the rear o-ring first. This will allow the o-ring to slide over the forward rings without falling into the open grooves.

Step 3
From the freezer door, remove design caps, pivot pins, draw handles, and draw valves. Remove all o-rings.

Step 4
Remove the large o-rings, front bearings, and guide bearings from the back of the freezer door.

Step 5
Return to the machine with a small amount of cleaning solution. With the black bristle brush, brush clean the rear shell bearings at the back of the freezing cylinders.

Note: If the drip pan was filled with an excessive amount of mix, this is an indication that the drive shaft o-ring of the beater assembly should be replaced or properly lubricated.

Step 6
Thoroughly brush clean all disassembled parts in the cleaning solution. Make sure all lubricant and mix film is removed. Take particular care to brush clean the draw valve cores in the freezer door. Place all the cleaned parts on a clean, dry surface to air dry overnight.

Step 7
Wipe clean all exterior surfaces of the machine.

Section 7 Important: Operator Checklist

During Cleaning and Sanitizing

ALWAYS FOLLOW LOCAL HEALTH CODES.

Cleaning and sanitizing schedules are governed by federal, state, or local regulatory agencies, and must be followed accordingly. If the unit has a "Standby mode", it must not be used in lieu of proper cleaning and sanitizing procedures and frequencies set forth by the ruling health authority. The following check points should be stressed during the cleaning and sanitizing operations.

CLEANING AND SANITIZING MUST BE PERFORMED DAILY.

Troubleshooting Bacterial Count

☐ 1. Thoroughly clean and sanitize the machine regularly, including complete disassembly and brush cleaning.

☐ 2. Use all brushes supplied for thorough cleaning. The brushes are specially designed to reach all mix passageways.

☐ 3. Use the smaller, white bristle brush to clean the mix inlet hole which extends from the mix hopper down to the rear of the freezing cylinder.

☐ 4. Use the black bristle brush to thoroughly clean the rear shell bearing located at the rear of the freezing cylinder. Be sure to have a generous amount of cleaning solution on the brush.

☐ 5. IF LOCAL HEALTH CODES PERMIT THE USE OF RERUN, make sure the mix rerun is stored in a sanitized, covered stainless steel container and is used the following day. DO NOT prime the machine with rerun. When using rerun, skim off the foam and discard. Mix the rerun with fresh mix in a ratio of 50/50 during the day's operation.

☐ 6. On a designated day of the week, run the mix as low as feasible and discard after closing. This will break the rerun cycle and reduce the possibility of high bacteria and coliform counts.

☐ 7. Properly prepare the cleaning and sanitizing solutions. Read and follow label directions carefully. Too strong of a solution may damage the parts and too weak of a solution will not do an adequate job of cleaning or sanitizing.

☐ 8. The temperature of the mix in the mix hopper and walk-in cooler should be below 40°F. (4.4°C.).

Regular Maintenance Checks

☐ 1. Check the rear shell bearing for signs of wear (excessive mix leakage in rear drip pan) and be certain it is properly cleaned.

☐ 2. Using a screwdriver and cloth towel, keep the rear shell bearing and the female hex drive socket clean and free of lubricant and mix deposits.

☐ 3. Dispose of o-rings or seals if they are worn, torn, or fit too loosely, and replace with new ones.

☐ 4. Follow all lubricating procedures as outlined in "Assembly".

☐ 5. If your machine is air cooled, check the condenser for an accumulation of dirt and lint. A dirty condenser will reduce the efficiency and capacity of the machine. Condensers should be cleaned **monthly** with a soft brush. **Never** use screwdrivers or other metal probes to clean between the fins.
Note: For machines equipped with an air filter, it will be necessary to vacuum clean the filters on a monthly schedule.

CAUTION: Always disconnect electrical power prior to cleaning the condenser. Failure to follow this instruction may result in electrocution.

☐ 6. If your machine is equipped with an auxiliary refrigeration system, check the auxiliary condenser for accumulation of dirt and lint. A dirty condenser will reduce the refrigeration capacity of the mix hopper. Condensers must be cleaned **monthly** with a soft brush. **Never** use screwdrivers or other metal probes to clean between the fins. Failure to comply may result in electrocution.

☐ 7. If your machine is water cooled, check the water lines for kinks or leaks. Kinks can occur when the machine is moved back and forth for cleaning or maintenance purposes. Deteriorated or cracked water lines should be replaced only by an authorized Taylor mechanic.

Winter Storage

If the place of business is to be closed during the winter months, it is important to protect the freezer by following certain precautions, particularly if the building is subject to freezing conditions.

Disconnect the freezer from the main power source to prevent possible electrical damage.

On water cooled freezers, disconnect the water supply. Relieve pressure on the spring in the water valve. Use air pressure on the outlet side to blow out any water remaining in the condenser. **This is extremely important.** Failure to follow this procedure may cause severe and costly damage to the refrigeration system.

Your local Taylor distributor can perform this service for you.

Wrap detachable parts of the freezer such as the beater assembly and freezer door, and place them in a protected dry place. Rubber trim parts and gaskets can be protected by wrapping them with moisture-proof paper. All parts should be thoroughly cleaned of dried mix or lubrication accumulations which attract mice and other vermin.

Section 8 Troubleshooting Guide

PROBLEM	PROBABLE CAUSE	REMEDY	PAGE REF.
1. No product being dispensed.	a. The power switch is in the OFF position.	a. Place the power switch in the AUTO position.	17
	b. The mix level is inadequate in the mix hopper.	b. Fill the mix hopper with mix.	18
	c. The beater motor overloaded.	c. Reset the freezer.	11
	d. The unit is unplugged at the wall receptacle.	d. Plug in the power cord.	1
	e. The circuit breaker is tripped or the fuse is blown.	e. Place the circuit breaker in the “ON” position or replace the fuse.	- - -
	f. The freezer door is incorrectly assembled.	f. See “Operating Procedures” for proper installation.	14
	g. Product is being drawn off in excess of the freezer’s capacity.	g. Stop drawing product and allow the unit to recover.	- - -
2. The machine will not operate in the AUTO mode.	a. The unit is unplugged.	a. Plug in the power cord.	1
	b. The refrigeration system is not activated.	b. Momentarily raise the draw switch to activate the refrigeration system.	- - -
	c. The circuit breaker is tripped, or the fuse is blown.	c. Place the circuit breaker in the ON position or replace the fuse.	- - -
	d. The beater motor overloaded, causing a loss of power to the power switch.	d. Reset the freezer.	11
3. The product is too stiff.	a. The control is set too cold.	a. Contact service technician.	- - -

PROBLEM	PROBABLE CAUSE	REMEDY	PAGE REF.
4. The product is too soft.	a. The control is set too warm.	a. Contact service technician.	- - -
	b. The air tube is not installed.	b. Install the air tube in the mix inlet hole at the bottom of the mix hopper.	18
	c. Out-drawing the freezer's capacity.	c. Two 4 oz. (113.4 gram) servings in one minute.	- - -
5. The freezing cylinder walls are scored.	a. Operating freezer without the front bearing on the freezer door.	a. Install the front bearing on the freezer door.	14
	b. The gear unit or the direct drive is out of alignment.	b. Contact service technician.	- - -
6. Excessive leakage in rear drip pan.	a. A worn or defective o-ring is on the beater drive shaft.	a. Replace o-rings every 3 months.	26
	b. The rear shell bearing is worn.	b. Contact service technician.	- - -
	c. Incorrect lubricant was used.	c. Use food grade lubricant (example: Taylor Lube).	13
	d. Inadequate lubrication of beater drive shaft.	d. Lubricate the beater drive shaft properly.	13
7. The draw valve is leaking.	a. Incorrect lubricant was used.	a. Use food grade lubricant (example: Taylor Lube).	14
	b. Worn or defective o-rings are on the draw valve.	b. Replace o-rings every 3 months.	26
	c. Inadequate lubrication of draw valve.	c. Lubricate the draw valve properly.	14
8. Product is not feeding into the freezing cylinder.	a. The mix level is inadequate in the mix hopper.	a. Fill the mix hopper with mix.	18
	b. The mix inlet hole is frozen.	b. Contact service technician.	- - -

PROBLEM	PROBABLE CAUSE	REMEDY	PAGE REF.
9. The unit goes out on overload excessively.	a. There are too many appliances plugged into the circuit. b. An extension cord has been placed between the power cord and the wall receptacle.	a. A **separate** 20A circuit is needed for the freezer to operate properly. b. If the extension cord is used, it must match the power cord in size of circuit ampacity.	- - - - - -
10. Mix from one freezing cylinder bleeds over to the second cylinder.	a. The center draw valve seal is worn, or is improperly lubricated.	a. Lubricate properly and replace seal every 3 months.	14 / 26

Section 9 Parts Replacement Schedule

PART DESCRIPTION	EVERY 3 MONTHS	EVERY 6 MONTHS	ANNUALLY	QTY.
Beater Drive Shaft O-Ring	X			2
Freezer Door O-Ring	X			2
Freezer Door Front Bearing	X			2
Freezer Door Guide Bearing	X			2
Draw Valve O-Ring	X			4
Center Draw Valve Seal	X			1
Pivot Pin O-Ring	X			2
Black Bristle Brush, 1” x 2”		Inspect & Replace if Necessary	Minimum	1
Double Ended Brush		Inspect & Replace if Necessary	Minimum	1
White Bristle Brush, 1” x 2”		Inspect & Replace if Necessary	Minimum	1
White Bristle Brush, 3” x 7”		Inspect & Replace if Necessary	Minimum	1

DESCRIPTION	PART NUMBER	QTY.	WARR. CLASS	REMARKS	PARTS UPDATE
BEARING-FRONT	023262	2	000		
BEARING-GUIDE	014496	2	000		
BEARING-REAR SHELL *150-52-68*	023648	2	000		
+COLLAR-REAR BEARING *150-2-68*	025564	2	103		
+NUT-REAR BEARING *150-52-68*	023647	2	000		
+TAB-BEARING LOCK *150-2-68*	025027	2	000		
BEATER A. *150-2-162-168*	X24689	2	103		
+O-RING-13/16 OD X .139W	021278	2	000		
BELT-AX24	055201	1	000		
BELT-AX45	045311	1	000	K5103487 & UP	
BELT-AX42	023877	1	000	K5103486 & PRIOR	
BLOCK-TERMINAL 7 POLE	022606	1	103	208-230V 60HZ 1PH	
BOARD-LOGIC-GEN 2.10-W/SEL DI	X36641SER2	2	212	REPLACES X36641SER1	
BOARD-POWER-GEN 1 & 2	X32326-SER	2	212		
BOOT-VALVE-EXPANSION	050900	2	000	K5103487 & UP	
BOOT-VALVE-EXPANSION	027137	2	000	K5103486 & PRIOR	
BRUSH-DOUBLE ENDED-PUMP&FEED T	013072	1	000		
BRUSH-DRAW VALVE 1"ODX2"X17"L	013073	1	000		
BRUSH-MIX PUMP BODY-3"X7"WHITE	023316	1	000		
BRUSH-REAR BRG 1IN.DX2IN.LGX14	013071	1	000		
CABLE-RIBBON-PWR/RELAY-60 IN	032445	2	103		
CAP-DESIGN-1.010"ID-6 POINT	014218	3	000		
COLLAR-HOLDING	019481	2	103		
COMPRESSOR L63B562BBCB	048727-27E	1	512	K5103487 & UP	
+CAPACITOR-RUN 30UF/370V	038487	1	103	K5103487 & UP	
+CAPACITOR-START 161-193UF/25	031790	1	103	K5103487 & UP	
+RELAY-START-COMPRESSOR	047067	1	103	K5103487 & UP	
+HARNESS-WIRE-CAP/RELAY *161	063975-27	1	103	K5103487 & UP	
COMPRESSOR RS80C1E-CAV-224	051958-27	1	512	K5103486 & PRIOR - 208-230V 60HZ 1PH	
+CAPACITOR-RUN- 20UF/440V	012906	1	103	K5103486 & PRIOR - 208-230V 60HZ 1PH	
+CAPACITOR-START-189-227UF/330V	033044-1	1	103	K5103486 & PRIOR - 208-230V 60HZ 1PH	
+RELAY-START-COMPRESSOR	051957-27	1	103	K5103486 & PRIOR - 208-230V 60HZ 1PH	

+ Available Separately

DESCRIPTION	PART NUMBER	QTY.	WARR. CLASS	REMARKS	PARTS UPDATE
+HARNESS-WIRE-CAP/RELAY *161	055840-27	1	103	K5103486 & PRIOR - 208-230V 60HZ 1PH	
COMPRESSOR PL35G	055187-27	1	512	SHR	
+CAPACITOR-START- 43-52UF/250V	033041	1	103		
+RELAY-START-COMPRESSOR	055358	1	103		
CONDENSER-AC 12LX16HX2.5T3RO	048935	1	103	J5103487 & UP - MAIN	
CONDENSER-AC-12LX16HX2.5-3 ROW	055140	1	103	J5103486 & PRIOR - MAIN	
CONDENSER-AC 7X6X1.25-2 ROW	027155	1	103	SHR K5103487 & UP	
+DRYER-CAP. TUBE .021 ID X 9F	055522	1	103	SHR	
+HARNESS-WIRE-DANFOSS *161*	063563	1	103	SHR	
+SHROUD DANFOSS *060*710*	048818	1	103	SHR	
CONTACTOR-230VAC 1PH 50/60HZ	055248-27	3	103	BEATER MOTOR RELAY	
+BUTTON-RESET-RED PLASTIC	055249	2	103		
+OVERLOAD-THERMAL 2P-2.4/3	055249-27G	2	103		
COVER A.-HOPPER *162-168*	X37963	1	103		
KNOB-MIX COVER	025429	1	103		
+GASKET-HOPPER COVER-8QT	037042	1	000		
CORD-POWER-250V-15A-95"L-SO	042936-27	1	103		
CORE-SCHRADER VALVE-TEFLON	037047	2	103		
DECAL-DEC-TAYLOR 161 GEN 11	055511	1	000		
DECAL-INST-CLN HPR	019029	1	000		
DECAL-TROUBLESHOOT	038374	1	000		
DIAGRAM-WIRING *161*	063820-27S	1	000	K5103487 & UP - 208-230V 60HZ 1 PH	
DIAGRAM-WIRING *161*	055376-27S	1	000	K5103486 & PRIOR - 208-230V 60HZ 1PH	
DOOR A.-3SPT 1.5QT VALOX W/BAF	X56906SER1	1	103	K3013048 & UP	
O-RING-2-3/4 OD X .139W	019998	2	000	DOOR	
HANDLE-DRAW VALVE	030564	3	103		
PIN A.-PIVOT *168-LONG*	X38538	1	103		
O-RING-5/16 OD X .070W	016272	1	000	PIVOT PINS	
PIN A.-PIVOT *168-SHORT*	X38539	1	103		
O-RING-5/16 OD X .070W	016272	1	000	PIVOT PINS	
VALVE-DRAW *150-2*	024763	2	103		
O-RING-7/8 OD X .103W	014402	4	000	DRAW VALVES	
VALVE-DRAW-CENTER *TM*	031164	1	103		

+ Available Separately

DESCRIPTION	PART NUMBER	QTY.	WARR. CLASS	REMARKS	PARTS UPDATE
SEAL-VALVE	030930	1	000	CENTER DRAW VALVE	
DOOR A.-3 SPOUT-1.5 QT	X30753-SER	1	103	K2024231 & PRIOR USE X56906-SER KIT	
DRYER-CAP. TUBE .021 ID X 9FT	055522	1	000	SHR	
DRYER-FILTER 1/4 X 1/4 SOLDER	048878	1	000		
DVD-OPS TRAIN VIDEO*TAYLORMATE	037665-DVD	1	000		
FAN-3 BLADE 12 " PULL 24DEG CW	063397	1	103	K5103487 & UP	
FASTENER-CLIP 1/4-20 U-TYPE	045865	8	000	PANELS	
FASTENER-CLIP 10-32 J TYPE	048353	2	000	RIGHT PANEL	
FILTER-AIR 13.5X17.75X7/16	042703	1	000		
GASKET-BASE PAN *161*	055815	1	000	S/N K6036537 & UP	
GEAR A.*REDUCER 4 TO 1	025770	2	212		
GROMMET-COMPRESSOR MOUNTING	037428	4	000		
+SLEEVE-MOUNTING-COMP.	039924	4	000		
HOOD A. *161* SOLDERED	X55118	1	103		
KIT A.-TUNE UP*162-168*	X31167	1	000		
BEARING-FRONT	023262	2	000		
BEARING-GUIDE	014496	2	000		
CAP-DESIGN-1.010"ID-6 POINT	014218	3	000		
O-RING-13/16 OD X .139W	021278	2	000		
O-RING-2-3/4 OD X .139W	019998	2	000		
O-RING-5/16 OD X .070W	016272	2	000		
O-RING-7/8 OD X .103W	014402	4	000		
SEAL-VALVE	030930	1	000		
TOOL-O-RING REMOVAL-FREEZER	048260-WHT	1	000		
LABEL-CAUTION-GRD-PERM-ENG/SP	032164	1	000		
LABEL-DOOR-MOVE PART	032749	1	000		
LABEL-SW-POWER-OFF/ON-SYMBOLS	052632	1	000		
LABEL-WARN-COVER	051433	5	000		
LABEL-WARN-ELEC-TW-SMALL	032718	1	000		
LEG-4" 3/8-16 STUD	036397	4	103	S/N K6035648 & PRIOR	
+CAP-RUBBER	037268	4	000		
LUBRICANT-TAYLOR 4 OZ.	047518	1	000		
MAN-OPER 161	055155-M	1	000		

+ Available Separately

+ Available Separately

DESCRIPTION	PART NUMBER	QTY.	WARR. CLASS	REMARKS	PARTS UPDATE
MOTOR-1/2 HP REMOTE CAPS	055097-27G	2	212	K5103881 & UP - 208-230V 60HZ 1 PH	
+CAPACITOR-RUN 10UF/370V	059998	2	103	K5103487 & UP	
+CAPACITOR-START 72-88UF/330V	059757	2	103	K5103487 & UP	
MOTOR-1/2 HP 1PH 60 HZ	055097-27	2	212	K4126923 & PRIOR - 208-230V 60HZ 1PH	
+CAPACITOR-START 43-52UF/250V	056168	2	103	K4126923 & PRIOR	
+CAPACITOR-RUN- 9-11UF/370V	025962	2	103	K4126923 & PRIOR	
MOTOR-FAN	062253-27	1	103	K5103881 & UP - 208-230V 60HZ 1 PH	
MOTOR-FAN 50 WATT	029770-27	1	103		
+FAN-3 BLADE 12 " PULL 24DEG	063397	1	103	K5103487 & UP	
+FAN-5 BLADE 12" PUSH 22DEG CCW	049009	1	103	K5103486 & PRIOR	
NUT-STUD *161-162-168*	056802	2	103	K3013048 & UP - HANDSCREWS	
NUT-STUD *150-152-162-168*	034829	2	103	K2024231 & PRIOR - HANDSCREWS	
OVERLOAD-THERMAL-2P-2.4/3.6A	055249-27G	2	103	BEATER MOTOR OVERLOAD	
PAIL-6 QT.	023348	1	000		
PAN-DRIP *161*	055206	2	103		
PANEL A.-FRONT *161*	X58488	1	103	K5103487 & UP	
PANEL-SIDE-LEFT *161*	058491	1	103	K5103487 & UP	
PANEL-LOWER-FRONT *161*	058493	1	103	K5103487 & UP	
PANEL-REAR *161*AC	058492	1	103	K5103487 & UP	
PANEL A.-SIDE RIGHT *161*	X58490	1	103	K5103487 & UP	
PANEL A.-FRONT *161*	X55203	1	103	K5103486 & PRIOR	
PANEL A.-SIDE LEFT *161*	X55122	1	103	K5103486 & PRIOR	
PANEL-LOWER FRONT *161* GENII	055513	1	103	K5103486 & PRIOR	
PANEL-REAR *161*	055129	1	103	K5103486 & PRIOR	
PANEL-SIDE-RIGHT *161*	055130	1	103	K5103486 & PRIOR	
PANEL-SKIRT-AIR *161*	055508	1	103	K5103486 & PRIOR	
PLATE-DEC *161* GENII	055512	1	103		
PROBE A.-MIX *SQUARE*	X30922	2	103	K5103486 & PRIOR	
+DISC-PROBE *SQ HOLE*	030965	2	103		
+SPACER-PROBE *SQ HOLE*	030966	2	103		
PROBE A.-THERMISTOR	X31602	2	103	BARREL	
PROBE A.-THERM./RESISTOR *161*	X55540	1	NNN	HOPPER	
PROBE-THERMISTOR-BARREL-2% TOL	038061-BLK	1	103	HOPPER	

DESCRIPTION	PART NUMBER	QTY.	WARR. CLASS	REMARKS	PARTS UPDATE
PULLEY-5.7" PITCH DIA X 5/8	041498	2	103	GEAR	
PULLEY-AK20X5/8	041162	2	103	BEATER MOTOR	
RESISTOR A.-*161* CONT. BOX*	X55449	1	103	BEATER MOTOR CONTACTOR	
SANITIZER KAY-5 125 PACKETS	041082	1	000		
SHELL A.-INSULATED *161*	X58457	1	512	K5103487 & UP	
+STUD-NOSE CONE-5/16-18X5/16-18	013496	2	103		
SHELL A.-INSULATED *161*GEN 11	X55629	1	512	K1075174-K5103486	
+STUD-NOSE CONE-5/16-18X5/16-18	013496	2	103		
SHIELD-SPLASH *5454-8-752-336*	022765	1	103		
SHROUD-CONDENSER *161*	064356	1	103	K5103487 & UP	
SHROUD-CONDENSER *161*	055128	1	103	K5103486 & PRIOR	
SHROUD DANFOSS *060*710*	048818	1	103	SHR	
SWITCH A.-DRAW *161*	X55234	2	103		
+ACTUATOR-SWITCH, PLASTIC	035609	2	103		
+ARM A.-SWITCH *162-168*	X30736	2	103		
BEARING-SWITCH	029244	4	000		
BRACKET-SWITCH *168*	035524	2	103		
+E-RING-1/4 IN-ZD	034962	2	000		
INSULATOR-SWITCH 1/64 ARMITE	029099	2	000		
NUT-PUSH ON-1/2DIA. SHAFT	039735	4	000		
SCREW-4-40X1 RD HD STEEL-ZP	028890	4	000		
+SCREW-6-32X3/8 BIN.HD SLOT SS	002201	4	000		
+SPRING-COMP.720X.063X2.00	023664	2	103		
SWITCH-LEVER-SPDT-15A-125-250V	027214	2	103		
SWITCH-PRESSURE 405 PSI-SOLDER	052663	1	103		
SWITCH-TOGGLE-4PDT*ON-NONE-ON	037394	1	103		
TRAY-DRIP 16-7/8L X 5-1/8	020157	1	103		
TUBE-FEED-SS-TM-TWIN	030797	2	103		
VALVE-ACCESS 1/4FL X 1/4SOLDER	044404	1	103	SHR	
VALVE-ACCESS-1/4 MFLX1/4 S-90	047016	1	103		
VALVE-ACCESS-1/4MFL X 3/8ODSDR	053565	2	103		
VALVE-EPR 1/4S	022665	1	103	SHR	
VALVE-EXP-AUTO-1/4S X1/4 FPT	046365	2	103	K5103487 & UP	

+ Available Separately

DESCRIPTION	PART NUMBER	QTY.	WARR. CLASS	REMARKS	PARTS UPDATE
VALVE-EXP-AUTO-1/4S X 1/4FPT	047232	2	103	K5103486 & PRIOR	
+BOOT-EXPANSION VALVE	027137	2	000		
VALVE-SOLENOID 5/16ORFX1/2ODF	044982-27	2	103	SUCTION LINE	
VALVE-SOLENOID 7/64ORF X 1/4S	043449-27	2	103	LIQUID LINE	
VALVE-TREV 3/8X3/8 220 *161*	055378	1	103	LIQUID REINJ VALVE K5103486 & PRIOR	

DESCRIPTION	PART NUMBER	QTY.	WARR. CLASS	REMARKS	PARTS UPDATE
220-240V 50HZ 1 PH					
BLOCK-TERMINAL-7 POLE GREEN	024156	1	103	220-240V 50HZ 1PH	
DIAGRAM-WIRING *161*	063820-40S	1	000	K6036551 & UP	
DIAGRAM-WIRING *161*	055376-40S	1	000	K6021398 & PRIOR	
DVD-OPS TRAIN VIDEO*TAYLORMATE	037665-DVD	1	000	K6036551 & UP	
COMPRESSOR L63B562BBKB	048727-40E	1	512	K6036551 & UP	
+CAPACITOR-RUN 15UF/370V	027087	1	103	K6036551 & UP	
+CAPACITOR-START 161-193UF/250V	031790	1	103	K6036551 & UP	
+RELAY-START-COMPRESSOR	048766	1	103	K6036551 & UP	
COMPRESSOR RS80C1E-CAZ-224	051958-40	1	512	K6021398 & PRIOR	
+CAPACITOR-RUN- 20UF/370V	023606	1	103	K6021398 & PRIOR	
+CAPACITOR-START- 64-77UF/250V	051960	1	103	K6021398 & PRIOR	
+RELAY-START-COMPRESSOR	051957-40	1	103	K6021398 & PRIOR	
CORD-1.5MM-3 HAR7 16GA 60DEG	051656-95	1	103	K6036551 & UP	
MOTOR-1/2 HP REMOTE CAPS	055097-40G	2	212	K6036551 & UP	
+CAPACITOR-START-88-108UF/	059759	1	103	K6036551 & UP	
MOTOR-1/2 HP 1 PH 50 HZ 230V	055097-34	2	212	K6021398 & PRIOR	
+CAPACITOR-START- 64-77UF/250V	026657	2	103	K6021398 & PRIOR	

+ Available Separately

DESCRIPTION	PART NUMBER	QTY.	WARR. CLASS	REMARKS	PARTS UPDATE
WATER COOLED 220-240V 50HZ 1 PH					
ADAPTOR-3/8MP X 1/2 BARB-BR	011021	2	103		
BRACKET-VALVE-W/C *C708*	058440	1	NNN		
CLAMP-HOSE-ADJ 7/16 X 25/32	010031	6	000		
CONDENSER-WC-SPIRAL 11-1/2 O	049309	1	103		
+ELBOW-1/2OD COPPER X 1/2 HOSE	034095	2	103		
+ELBOW-1/2S-STREET-SHORT RAD-90	013809	1	103		
HOSE-RUBBER 1/2 ID X 7/8 OD	R50200	5'	000		
PANEL-REAR *161*WC*	063837	1	103		
PANEL-SIDE *161*R*WC*	063838	1	103		
SWITCH-PRESSURE 350 PSI-SOLDER	048231	1	103		
VALVE-WATER 3/8 REG/HEAD PRESS	046686	1	103		

+ Available Separately

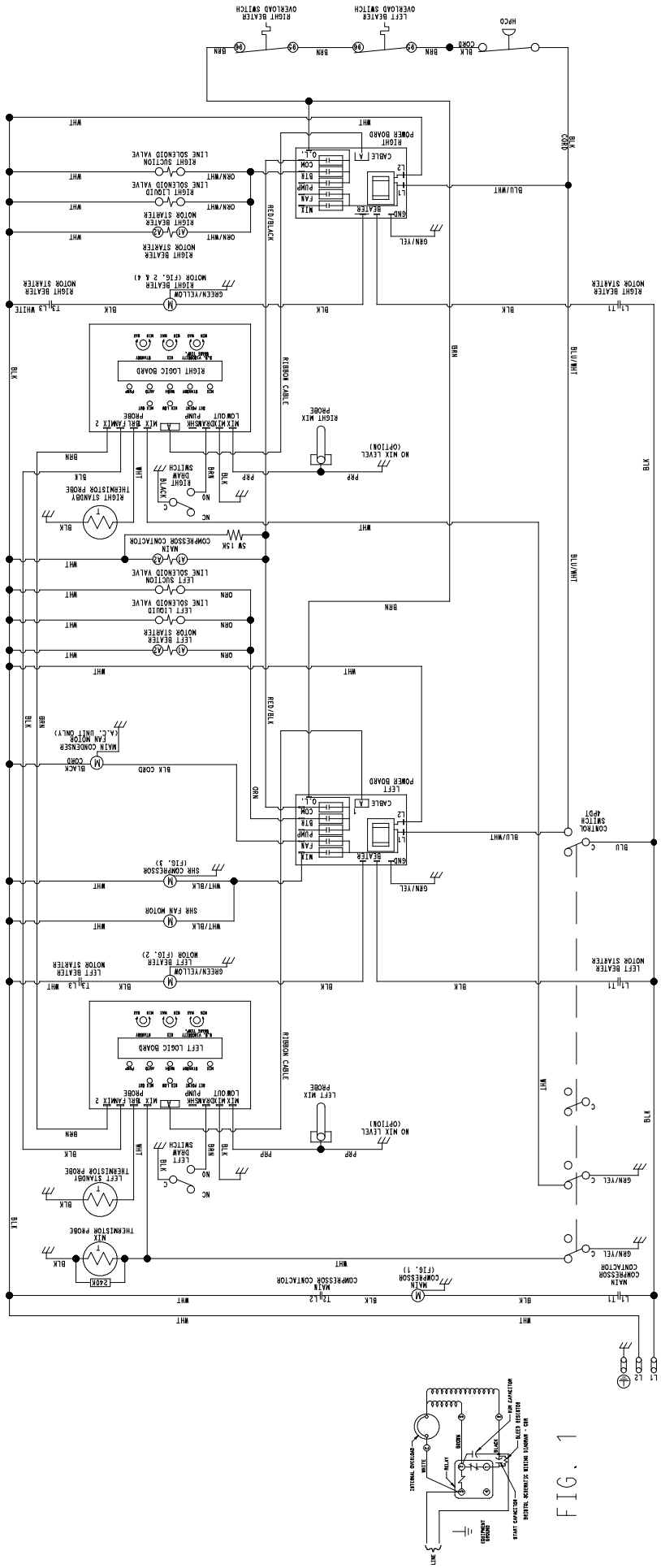

FIG. 1

FIG. 2

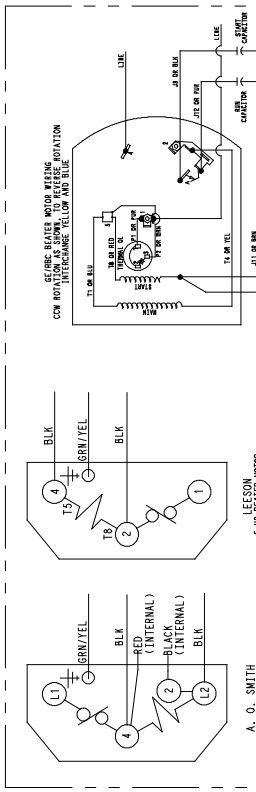

FIG. 3

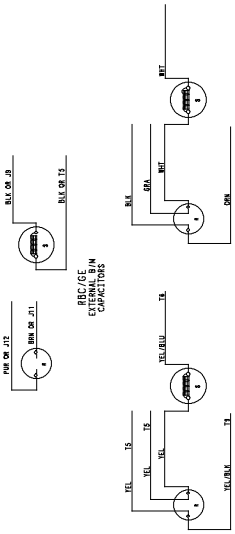

FIG. 4

NOTE:
1. FOR CCW ROTATION OF A. O. SMITH BEATER MOTOR CONNECT INTERNAL RED TO TERMINAL 4 & INTERNAL BLACK TO TERMINAL 2.

GROUND FRAME SECURELY

Model 161
063820-27S
Rev. 8/08

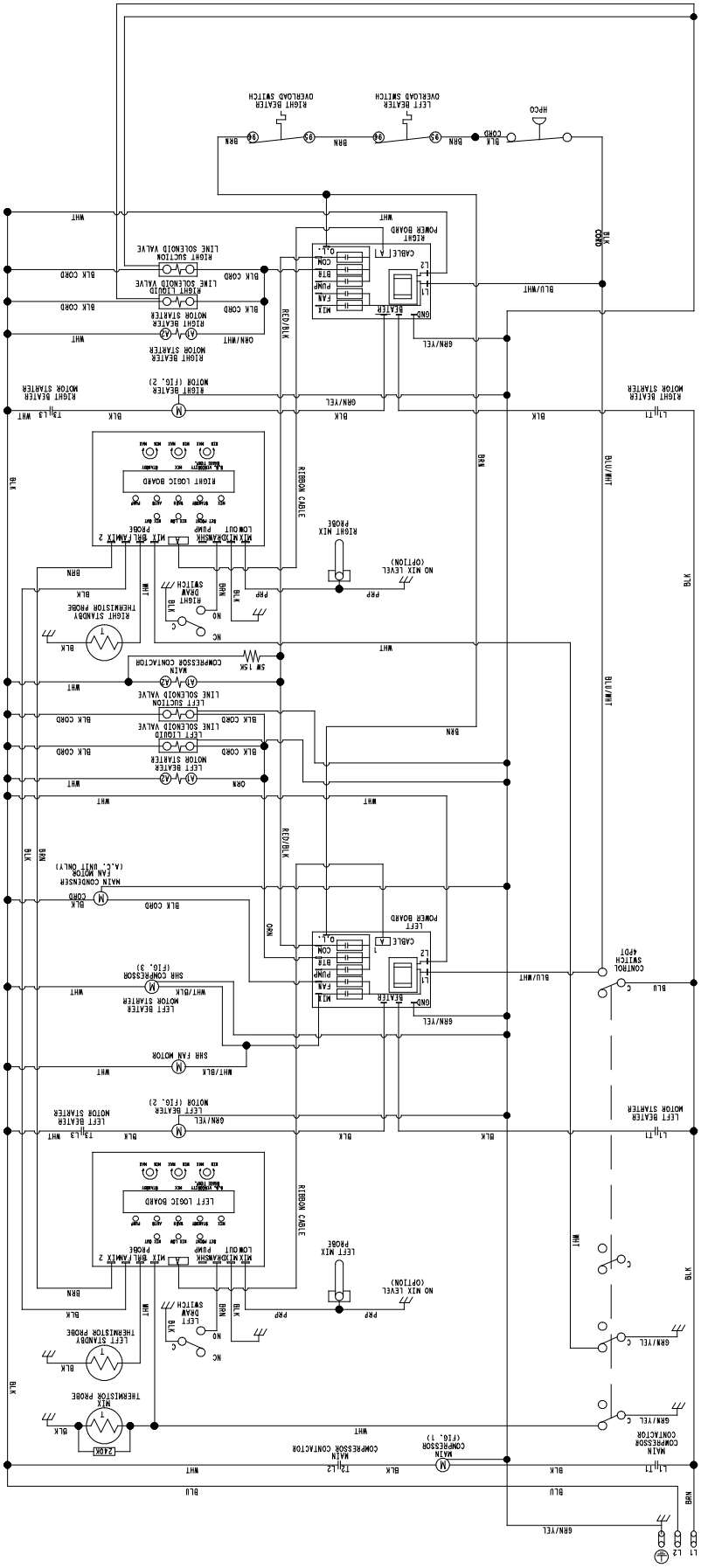

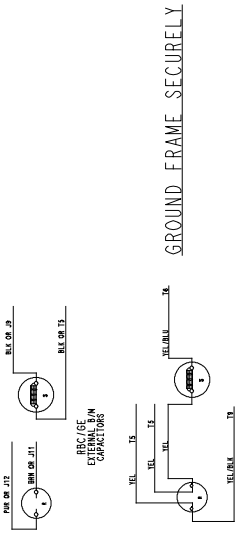

FIG. 4

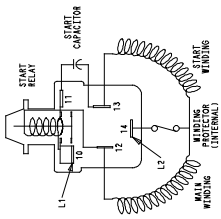

FIG. 3

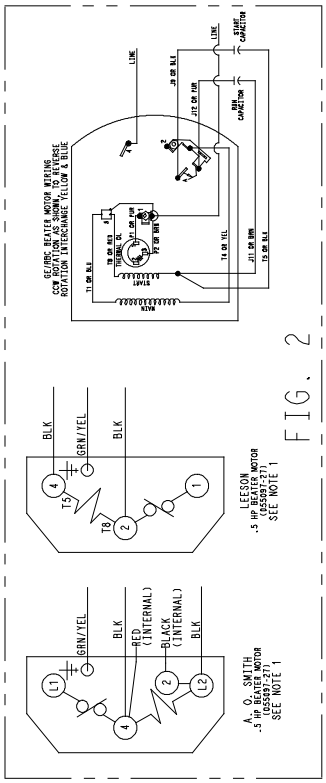

FIG. 2

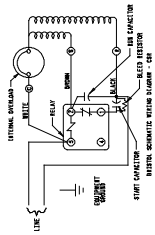

FIG. 1

Model 161
063820-40S
Rev. 8/08