TAYLOR
United Technologies

Item No. _____

C722

CROWN SERIES

TOTALLY DIFFERENT.

C722

Soft Serve Freezer

Twin Twist, Pump

Shown with optional standard height cart.

Shown with optional top air discharge chute.

Simplified Pump.

NSF Standard 6 | c UL us LISTED SA2650 | CE Selected 50 Hz. Models

Features

Offer all the popular soft serve variations from low or non-fat ice creams to custards, yogurt and sorbet. Serve two separate soft serve flavors, or an equal combination of both in a twist.

Freezing Cylinder

Two, 2.8 quart (2.7 liter).

Mix Hopper

Two, 14 quart (13.2 liter). Separate hopper refrigeration (SHR) maintains mix below 41ºF (5ºC) during Auto and Standby modes.

Indicator Lights

Digital readout displays hours since last brush cleaning to assure product safety. Mix Low light alerts operator to add mix. Audible alarm may be enabled to sound when mix is low. When the Mix Out light flashes, the unit shuts down automatically to prevent damage.

Touch Screen Controls

Microprocessor touch controls are embedded in durable tempered glass panel. Multiple languages are selectable. Viscosity is continually measured to dispense consistent quality soft serve desserts. Temperatures in the hoppers or freezing cylinders may be displayed at any point of operation, in either Fahrenheit or Celsius. Draw counter allows operator to view number of servings dispensed.

Standby

During long no-use periods, the standby feature maintains safe product temperatures in the mix hopper and freezing cylinder.

Door Interlock System

Protects the operator from injury as the beater will not operate without the dispensing door in place.

Freezer Door

A specially designed thermo-plastic door allows quick ejection of product with a simple movement of the draw handle. Self closing draw handles are standard.

Optional cart recommended for self service application to meet Americans with Disabilites Act (ADA) dispensing height.

Rockton, Illinois 61072
800-255-0626
Phone 815-624-8333 Fax 815-624-8000
www.taylor-company.com
e-mail: info@taylor-company.com

International Office
Taylor Company S.r.l.
Roma, Italy
Tel: **+39-06-420-12002** Fax: +39-06-420-12034
e-mail: romeoff@taylor-company.com

ISO 9001:2008 Registered Firm

C722 Soft Serve Freezer

Shown with optional Air Discharge Chute and Standard Cart

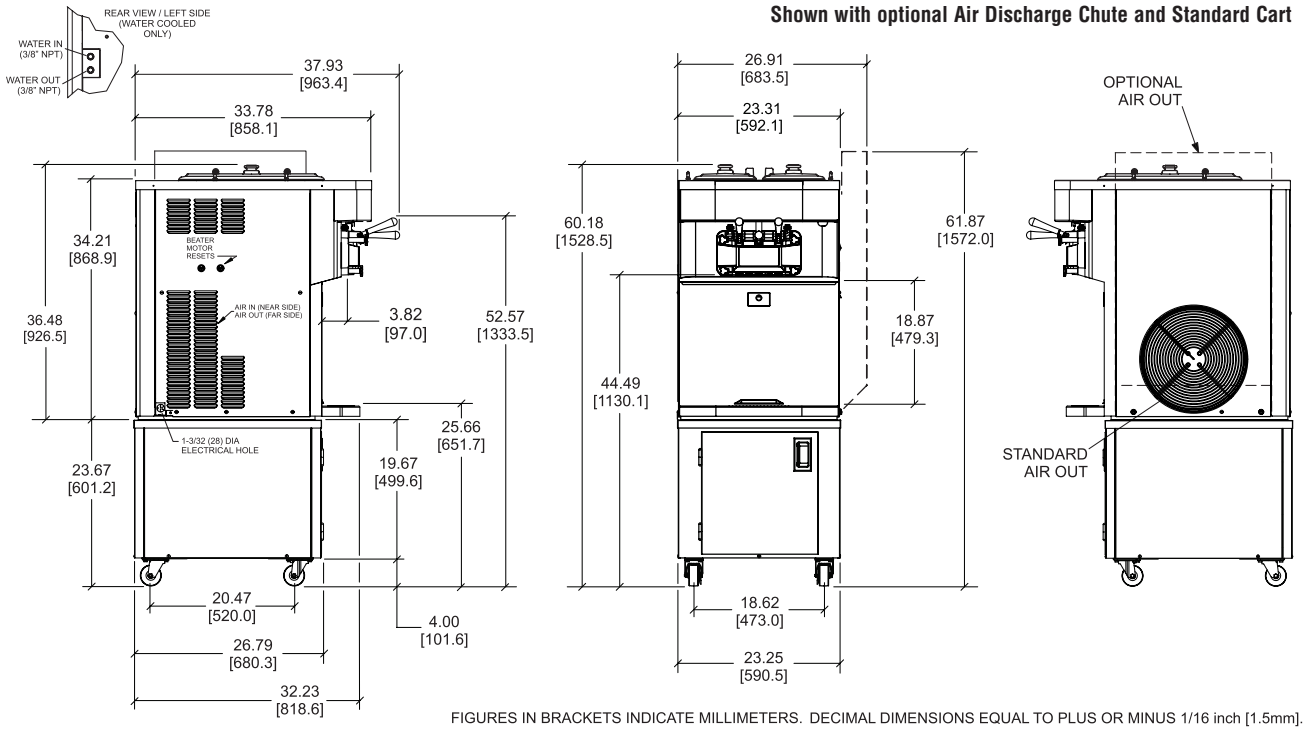

FIGURES IN BRACKETS INDICATE MILLIMETERS. DECIMAL DIMENSIONS EQUAL TO PLUS OR MINUS 1/16 inch [1.5mm].

Weights	lbs.	kgs.
Net	549	249.0
Crated	608	275.8
	cu. ft.	**cu. m.**
Volume	39.2	1.11

Dimensions	in.	mm.
Width	23-5/16	592
Depth	33-13/16	858
Height	36-1/2	927
Counter Clearance	---	---

**Designed to rest on a plastic pad directly on counter top or optional cart.*

Electrical	Maximum Fuse Size	Minimum Circuit Ampacity	Poles (P) Wires (W)
208-230/60/1 Air	40	29	2P 3W
208-230/60/1 Water	40	29	2P 3W
208-230/60/3 Air	25	18	3P 4W
208-230/60/3 Water	25	18	3P 4W
220-240/50/1 Air	30	24	2P 3W
380-415/50/3N~ Air	12	9	4P 5W

This unit may be manufactured in other electrical characteristics. Refer to the local Taylor Distributor for availability.

(For exact electrical information, always refer to the data label of the unit.)

Continuing research results in steady improvements; therefore, these specifications are subject to change without notice.

Bidding Specs

Electrical: Volt _____ Hz _____ ph _____

Neutral: ☐Yes ☐No | **Cooling**: ☐Air ☐Water ☐NA

Options: _____

Specifications

Electrical

One dedicated electrical connection is required. See the Electrical chart for the proper electrical requirements. Manufactured to be permanently connected. Consult your local Taylor distributor for cord & receptacle specifications as local codes allow.

Beater Motor

Two, 1.0 HP.

Refrigeration System

One, 9,500 BTU/hr. R404A.
Separate Hopper Refrigeration (SHR), One, 400 BTU/hr. R134a.
(BTUs may vary depending on compressor used.)

Air Cooled

Minimum 6" (152 mm) on both sides. It is recommended to place the rear of the unit against a wall, or allow 6" clearance (152 mm) at the rear. Optional air discharge chute directs heated air exhaust upwards; minimum clearance above top air discharge chute is 12" (305 mm). No clearance required on right side if air discharge chute is used.

Water Cooled

Water inlet and drain connections out rear panel 3/8" FPT.

Options

- Standard Cart with casters and a door (shown)
  Net Weight: 74 lbs. (33.6 kg) **Crated Weight:** 95 lbs. (43.1 kg)
- ADA Cart with casters - recommended for self service to meet ADA compliant dispensing height - no door (see C722 ADA spec. sheet)
  Net Weight: 74 lbs. (33.6 kg) **Crated Weight:** 87 lbs. (39.5 kg)
- Drain Adaptor (for ease of rinsing & cleaning)
- Draw handles to comply with ADA force requirement
- Draw Valve Lock Kit
- Hopper Locks
- Hopper Agitators
- Legs - [increase height of unit by 4-1/4" (108 mm)]
- Decals - Twist or Flavor Burst Cone
- Top Air Discharge

TAYLOR
United Technologies

Taylor Company,
Rockton, Illinois 61072
815-624-8333 **800-255-0626** Fax 815-624-8000
www.taylor-company.com