OPERATOR'S
MANUAL

Model C722
Soft Serve Freezer

Original Operating Instructions

080568-M

2/22/12 (Original Publication)
Updated 11/21/13

Complete this page for quick reference when service is required:

Taylor Distributor:_____

Address:_____

Phone:_____

Service:_____

Parts:_____

Date of Installation:_____

Information found on the data label:

Model Number:_____

Serial Number:_____

Electrical Specs: Voltage_____Cycle_____

Phase_____

Maximum Fuse Size:_____A

Minimum Wire Ampacity:_____A

© 2012 Carrier Commercial Refrigeration, Inc.
080568-M
Any unauthorized reproduction, disclosure, or distribution of copies by any person of any portion of this work may be a violation of Copyright Law of the United States of America and other countries, could result in the awarding of Statutory Damages of up to $250,000 (17 USC 504) for infringement, and may result in further civil and criminal penalties. All rights reserved.

Taylor Company
a division of Carrier Commercial Refrigeration, Inc.
750 N. Blackhawk Blvd.
Rockton, IL 61072

Table of Contents

Section 1 To the Installer 1

Installer Safety 1
Site Preparation 1
Air Cooled Units 1
Water Connections (Water Cooled Units Only) 2
Electrical Connections 2
Beater Rotation 3
Optional Carts 3
Refrigerant 3

Section 2 To the Operator 4

Section 3 Safety 5

Section 4 Operator Parts Identification 8

Model C722 8
Door and Beater Assembly 10
X69928-14S Pump A. - Mix Simplified S.S. 11
Accessories 12
Brushes 13
Optional Carts 14

Section 5 Important: To the Operator 15

Symbol Definitions 16
Operating Screen Descriptions 18
Manager's Menu 19

Section 6 Operating Procedures 25

Assembly 25
Mix Pump Assembly 30
Sanitizing 32
Priming 34
Manual Brush Cleaning 34

Draining Product From The Freezing Cylinder 35
Rinsing 35
Hopper Cleaning 35
Disassembly 36
Brush Cleaning 37

Section 7 Important: Operator Checklist 38

During Cleaning and Sanitizing 38
Troubleshooting Bacterial Count 38
Regular Maintenance Checks 38
Winter Storage 39

Section 8 Troubleshooting Guide 40

Section 9 Parts Replacement Schedule 44

Section 10 Limited Warranty on Equipment 45

Section 11 Limited Warranty on Parts 47

Section 12 Parts List 50

Wiring Diagrams 62

Note: Continuing research results in steady improvements; therefore, information in this manual is subject to change without notice.

Note: Only instructions originating from the factory or its authorized translation representative(s) are considered to be the original set of instructions.

© 2012 Carrier Commercial Refrigeration, Inc. (Original Publication)
Updated November, 2013
080568-M
Any unauthorized reproduction, disclosure, or distribution of copies by any person of any portion of this work may be a violation of Copyright Law of the United States of America and other countries, could result in the awarding of Statutory Damages of up to $250,000 (17 USC 504) for infringement, and may result in further civil and criminal penalties.
All rights reserved.

Taylor Company
a division of Carrier Commercial Refrigeration, Inc.
750 N. Blackhawk Blvd.
Rockton, IL 61072

Section 1 To the Installer

The following information has been included in the manual as safety and regulatory guidelines. For complete installation instructions, please see the Installation Checklist.

Installer Safety

In all areas of the world, equipment should be installed in accordance with existing local codes. Please contact your local authorities if you have any questions.

Care should be taken to ensure that all basic safety practices are followed during the installation and servicing activities related to the installation and service of Taylor equipment.

- Only authorized Taylor service personnel should perform installation and repairs on the equipment.
- Authorized service personnel should consult OSHA Standard 29CFRI910.147 or the applicable code of the local area for the industry standards on lockout/tagout procedures before beginning any installation or repairs.
- Authorized service personnel must ensure that the proper PPE is available and worn when required during installation and service.
- Authorized service personnel must remove all metal jewelry, rings, and watches before working on electrical equipment.

The main power supply(s) to the freezer must be disconnected prior to performing any repairs. Failure to follow this instruction may result in personal injury or death from electrical shock or hazardous moving parts as well as poor performance or damage to the equipment.

Note: All repairs must be performed by an authorized Taylor Service Technician.

This unit has many sharp edges that can cause severe injuries.

Site Preparation

Review the area where the unit will be installed before uncrating the unit. Make sure all possible hazards to the user or equipment have been addressed.

Air Cooled Units

The Model C722 air cooled unit requires a minimum of 6” (152 mm) on the left and right sides and 0” on the back. The C722 equipped with top air discharge requires 6” (152 mm) on the left side, 0” on the right side, and 0” on the back.

This will allow for adequate air flow across the condenser. Failure to allow adequate clearance can reduce the refrigeration capacity of the freezer and possibly cause permanent damage to the compressor.

For Indoor Use Only: This unit is designed to operate indoors, under normal ambient temperatures of 70°-75°F (21°-24°C). The freezer has successfully performed in high ambient temperatures of 104°(40°C) at reduced capacities.

This unit must **NOT** be installed in an area where a water jet or hose can be used. **NEVER** use a water jet or hose to rinse or clean the unit. Failure to follow this instruction may result in electrocution.

This unit must be installed on a level surface to avoid the hazard of tipping. Extreme care should be taken in moving this equipment for any reason. Two or more people are required to safely move this unit. Failure to comply may result in personal injury or equipment damage.

Uncrate the unit and inspect it for damage. Report any damage to your Taylor Distributor.

This piece of equipment is made in the USA and has USA sizes of hardware. All metric conversions are approximate and vary in size.

Water Connections

(Water Cooled Units Only)

An adequate cold water supply must be provided with a hand shut-off valve. On the underside of the base pan or on the right side, two 3/8” I.P.S. water connections for inlet and outlet are provided for easy hook-up. 1/2” inside diameter water lines should be connected to the machine. (Flexible lines are recommended, if local codes permit.) Depending on local water conditions, it may be advisable to install a water strainer to prevent foreign substances from clogging the automatic water valve. There will be only one water “in” and one water “out” connection. DO NOT install a hand shut-off valve on the water “out” line! Water should always flow in this order: First, through the automatic water valve; second, through the condenser; and third, through the outlet fitting to an **open trap drain.**

A back flow prevention device is required on the incoming water connection side. Please refer to the applicable National, State, and local codes for determining the proper configuration.

Electrical Connections

In the United States, this equipment is intended to be installed in accordance with the National Electrical Code (NEC), ANSI/NFPA 70-1987. The purpose of the NEC is the practical safeguarding of persons and property from hazards arising from the use of electricity. This code contains provisions considered necessary for safety. In all other areas of the world, equipment should be installed in accordance with the existing local codes. Please contact your local authorities.

FOLLOW YOUR LOCAL ELECTRICAL CODES!

Each unit requires one power supply for each data label on the unit. Check the data label(s) on the freezer for branch circuit overcurrent protection or fuse, circuit ampacity, and other electrical specifications. Refer to the wiring diagram provided inside of the electrical box for proper power connections.

CAUTION: THIS EQUIPMENT MUST BE PROPERLY GROUNDED! FAILURE TO DO SO CAN RESULT IN SEVERE PERSONAL INJURY FROM ELECTRICAL SHOCK!

DO NOT operate this freezer with larger fuses than specified on the unit data label. Failure to follow this instruction may result in electrocution or damage to the machine.

This unit is provided with an equipotential grounding lug that is to be properly attached to the rear of the frame by the authorized installer. The installation location is marked by the equipotential bonding symbol (5021 of IEC 60417-1) on both the removable panel and the equipment's frame.

Stationary appliances which are not equipped with a power cord and a plug or another device to disconnect the appliance from the power source, must have an all-pole disconnecting device with a contact gap of at least 3 mm installed in the external installation.

Appliances that are permanently connected to fixed wiring and for which leakage currents may exceed 10 mA, particularly when disconnected or not used for long periods, or during initial installation, shall have protective devices such as a GFI, to protect against the leakage of current, installed by the authorized personnel to the local codes.

Supply cords used with this unit shall be oil-resistant, sheathed flexible cable not lighter than ordinary polychloroprene or other equivalent synthetic elastomer-sheathed cord (Code designation 60245 IEC 57) installed with the proper cord anchorage to relieve conductors from strain, including twisting, at the terminals and protect the insulation of the conductors from abrasion.

If the supply cord is damaged, it must be replaced by the manufacturer, its service agent, or similarly qualified person, in order to avoid a hazard.

Beater Rotation

Beater rotation must be clockwise as viewed looking into the freezing cylinder.

Note: The following procedures should be performed by a trained service technician.

To correct the rotation on a three-phase unit, interchange any two incoming power supply lines at freezer main terminal block only.

To correct rotation on a single-phase unit, change the leads inside the beater motor. (Follow the diagram printed on the motor.)

Electrical connections are made directly to the terminal block provided in the splice box.

Optional Carts

There are two optional carts available.

1. **C20600-AFB: ADA compliant height cart, not equipped with a door.**

2. **C20600-000: Standard height cart with reversible front door panel and rear panel. Note:** If the door is required on the rear of the cart instead of the front, the front door panel and the rear panel can be reversed. To reverse these panels, remove the five screws on each panel. Reverse and reinstall the panels, making sure **all** screws are reinstalled.

IMPORTANT! For safety purposes, the freezer must be bolted to the cart using all 4 bolts. Failure to comply could result in personnel injury and equipment damage.

Refrigerant

In consideration of our environment, Taylor uses only earth friendly HFC refrigerants. The HFC refrigerant used in this unit is R404A. This refrigerant is generally considered non-toxic and non-flammable, with an Ozone Depleting Potential (ODP) of zero (0).

However, any gas under pressure is potentially hazardous and must be handled with caution. NEVER fill any refrigerant cylinder completely with liquid. Filling the cylinder to approximately 80% will allow for normal expansion.

Use only R404A refrigerant that conforms to the AHRI standard 700 specification. The use of any other refrigerant may expose users and operators to unexpected safety hazards.

Refrigerant liquid sprayed onto the skin may cause serious damage to tissue. Keep eyes and skin protected. If refrigerant burns should occur, flush immediately with cold water. If burns are severe, apply ice packs and contact a physician immediately.

Taylor reminds technicians to be cautious of government laws regarding refrigerant recovery, recycling, and reclaiming systems. If you have any questions regarding these laws, please contact the factory Service Department.

WARNING: R404A refrigerant used in conjunction with polyolester oils is extremely moisture absorbent. When opening a refrigeration system, the maximum time the system is open must not exceed 15 minutes. Cap all open tubing to prevent humid air or water from being absorbed by the oil.

Section 2 To the Operator

Your freezer has been carefully engineered and manufactured to give you dependable operation.

This unit, when properly operated and cared for, will produce a consistent quality product. Like all mechanical products, it will require cleaning and maintenance. A minimum amount of care and attention is necessary if the operating procedures outlined in this manual are followed closely.

This Operator's Manual should be read before operating or performing any maintenance on your equipment.

Your Taylor freezer will NOT eventually compensate for, and correct, any errors during the set-up or filling operations. Thus, the initial assembly and priming procedures are of extreme importance. It is strongly recommended that personnel responsible for the equipment's operation, both assembly and disassembly, go through these procedures together in order to be properly trained and to make sure that no confusion exists.

In the event you should require technical assistance, please contact your local authorized Taylor Distributor.

Note: Your Taylor warranty is valid only if the parts are authorized Taylor parts, purchased from the local authorized Taylor Distributor, and only if all required service work is provided by an authorized Taylor service technician. Taylor reserves the right to deny warranty claims on units or parts if non-Taylor approved parts or incorrect refrigerant were installed in the unit, system modifications were performed beyond factory recommendations, or it is determined that the failure was caused by abuse, misuse, neglect, or failure to follow all operating instructions. For full details of your Taylor Warranty, please see the Limited Warranty section in this manual.

Note: Constant research results in steady improvements; therefore, information in this manual is subject to change without notice.

If the crossed out wheeled bin symbol is affixed to this product, it signifies that this product is compliant with the EU Directive as well as other similar legislation in effect after August 13, 2005. Therefore, it must be collected separately after its use is completed, and cannot be disposed as unsorted municipal waste. The user is responsible for returning the product to the appropriate collection facility, as specified by the local code.

For additional information regarding applicable local laws, please contact the municipal facility and/or local distributor.

Compressor Warranty Disclaimer

The refrigeration compressor(s) on this unit are warranted for the term stated in the Limited Warranty section in this manual. However, due to the Montreal Protocol and the U.S. Clean Air Act Amendments of 1990, many new refrigerants are being tested and developed, thus seeking their way into the service industry. Some of these new refrigerants are being advertised as drop-in replacements for numerous applications. It should be noted that in the event of ordinary service to this unit's refrigeration system, **only the refrigerant specified on the affixed data label should be used**. The unauthorized use of alternate refrigerants will void your Taylor compressor warranty. It is the unit owner's responsibility to make this fact known to any technician he employs.

It should also be noted that Taylor does not warrant the refrigerant used in its equipment. For example, if the refrigerant is lost during the course of ordinary service to this machine, Taylor has no obligation to either supply or provide its replacement either at billable or unbillable terms. Taylor does have the obligation to recommend a suitable replacement if the original refrigerant is banned, obsoleted, or no longer available during the five year warranty of the compressor.

Taylor will continue to monitor the industry and test new alternates as they are being developed. Should a new alternate prove, through our testing, that it would be accepted as a drop-in replacement, then the above disclaimer would become null and void. To find out the current status of an alternate refrigerant as it relates to your compressor warranty, call the local Taylor Distributor or the Taylor Factory. Be prepared to provide the Model/Serial Number of the unit in question.

131121

Section 3 Safety

We, at Taylor Company, are concerned about the safety of the operator when he or she comes in contact with the freezer and its parts. Taylor has gone to extreme efforts to design and manufacture built-in safety features to protect both you and the service technician. As an example, warning labels have been attached to the freezer to further point out safety precautions to the operator.

To Operate Safely:

IMPORTANT - Failure to adhere to the following safety precautions may result in severe personal injury or death. Failure to comply with these warnings may damage the machine and its components. Component damage will result in part replacement expense and service repair expense.

DO NOT operate the freezer without reading this Operator Manual. Failure to follow this instruction may result in equipment damage, poor freezer performance, health hazards, or personal injury.

This appliance is to be used only by trained personnel. It is not intended for use by children or people with reduced physical, sensory, or mental capabilities, or lack of experience and knowledge, unless given supervision or instruction concerning the use of the appliance by a person responsible for their safety. Children should be supervised to ensure that they do not play with the appliance.

This unit is provided with an equipotential grounding lug that is to be properly attached to the rear of the frame by the authorized installer. The installation location is marked by the equipotential bonding symbol (5021 of IEC 60417-1) on both the removable panel and the equipment's frame.

DO NOT use a water jet to clean or rinse the freezer. Failure to follow these instructions may result in serious electrical shock.

- **DO NOT** operate the freezer unless it is properly grounded.
- **DO NOT** operate the freezer with larger fuses than specified on the data label.
- All repairs must be performed by an authorized Taylor service technician.
- The main power supplies to the machine must be disconnected prior to performing any repairs.
- Cord Connected Units: Only Taylor authorized service technicians or licensed electricians may install a plug or replacement cord on these units.
- Stationary appliances which are not equipped with a power cord and a plug or another device to disconnect the appliance from the power source, must have an all-pole disconnecting device with a contact gap of at least 3 mm installed in the external installation.
- Appliances that are permanently connected to fixed wiring and for which leakage currents may exceed 10 mA, particularly when disconnected or not used for long periods, or during initial installation, shall have protective devices such as a GFI, to protect against the leakage of current, installed by the authorized personnel to the local codes.
- Supply cords used with this unit shall be oil-resistant, sheathed flexible cable, not lighter than ordinary polychloroprene or other equivalent synthetic elastomer-sheathed cord (Code designation 60245 IEC 57) installed with the proper cord anchorage to relieve conductors from strain, including twisting, at the terminals and protect the insulation of the conductors from abrasion.

  If the supply cord is damaged, it must be replaced by the manufacturer, its service agent, or similarly qualified person, in order to avoid a hazard.

Failure to follow these instructions may result in electrocution. Contact your local authorized Taylor Distributor for service.

- **DO NOT** allow untrained personnel to operate this machine.
- **DO NOT** operate the freezer unless all service panels and access doors are restrained with screws.
- **DO NOT** remove any internal operating parts (examples: freezer door, beater, scraper blades, etc.) unless all control switches are in the OFF position.

Failure to follow these instructions may result in severe personal injury to fingers or hands from hazardous moving parts.

This unit has many sharp edges that can cause severe injuries.

- **DO NOT** put objects or fingers in the door spout. This may contaminate the product and cause severe personal injury from blade contact.
- **USE EXTREME CAUTION** when removing the beater asssembly. The scraper blades are very sharp.
- **CAUTION-SHARP EDGES:** Two people are required to handle the cup/cone dispenser. Protective gloves must be worn and the mounting holes must NOT be used to lift or hold the dispenser. Failure to follow this instruction can result in personal injury to fingers or equipment damage.

Access to the service area of the unit is restricted to persons having knowledge and practical experience with the appliance, in particular as far as safety and hygiene are concerned.

This machine must be placed on a level surface. Extreme care should be taken in moving it for any reason. Two or more persons are required to safely move this machine. Failure to comply may result in personal injury or equipment damage.

Cleaning and sanitizing schedules are governed by your state or local regulatory agencies and must be followed accordingly. Please refer to the cleaning section of this manual for the proper procedure to clean this unit.

This machine is designed to maintain product temperature under 41°F (5°C). Any product being added to this machine must be below 41°F (5°C). Failure to follow this instruction may result in health hazards and poor freezer performance.

DO NOT obstruct air intake and discharge openings:

The Model C722 air cooled unit requires a minimum of 6” (152 mm) on the left and right sides and 0” on the back. The C722 equipped with top air discharge requires 6” (152 mm) on the left side, 0” on the right side, and 0” on the back. This will allow for adequate air flow across the condenser. Failure to allow adequate clearance can reduce the refrigeration capacity of the freezer and possibly cause permanent damage to the compressor.

For Indoor Use Only: This unit is designed to operate indoors, under normal ambient temperatures of 70 - 75°F (21 - 24°C). The freezer has successfully performed in high ambient temperatures of 104°F (40°C) at reduced capacities.

DO NOT run the machine without product. Failure to follow this instruction can result in damage to the machine.

NOISE LEVEL: Airborne noise emission does not exceed 78 dB(A) when measured at a distance of 1.0 meter from the surface of the machine and at a height of 1.6 meters from the floor.

Notes:

Section 4 Operator Parts Identification

Model C722

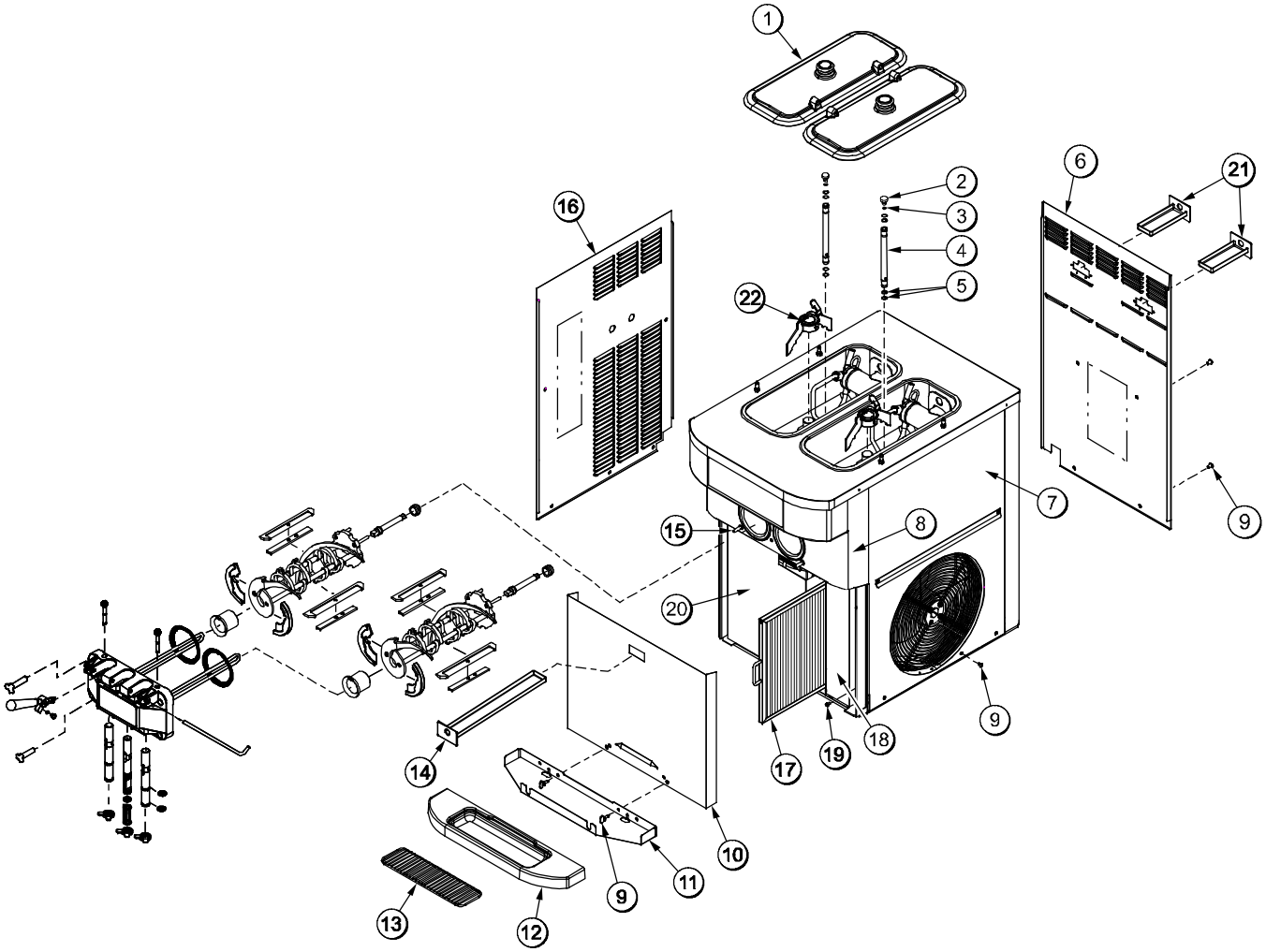

Figure 1

130506

Model C722 Exploded View Parts Identification

ITEM	DESCRIPTION	PART NO.
1	COVER-HOPPER-14 QT BLACK	041682-BLA
2	ORIFICE	022465-100
3	O-RING-11/16ODX.103W-RED	016132
4	TUBE A.-FEED-SS-5/32 HOLE	X29429-2
5	O-RING-.643 OD X .077W	018572
6	PANEL-REAR	080162
7	PANEL A.-SIDE RIGHT	X68854
8	PANEL A.-FRONT	X81843
9	SCREW-1/4-20X3/8 SLTD	011694
10	PANEL A.-FRONT-LOWER	X68858
11	SHELF-DRIP TRAY	080782

ITEM	DESCRIPTION	PART NO.
12	TRAY-DRIP	080781
13	SHIELD-SPLASH-WIRE	046177-SP
14	PAN A.-DRIP 15 1/8 LONG	X51601
15	STUD-NOSE CONE	055987
16	PANEL-SIDE LEFT	068851
17	FILTER A.	X81440
18	COVER-ACCESS-FRONT-R.	081833
19	SCREW-10X3/8 SLOTTED HEX	015582
20	COVER-ACCESS-LEFT	081834
21	PAN-DRIP-REAR	080226
*22	BLADE A.-AGITATOR	X56591-SP

*FACTORY-EQUIPPED AGITATOR UNITS, ONLY

Door and Beater Assembly

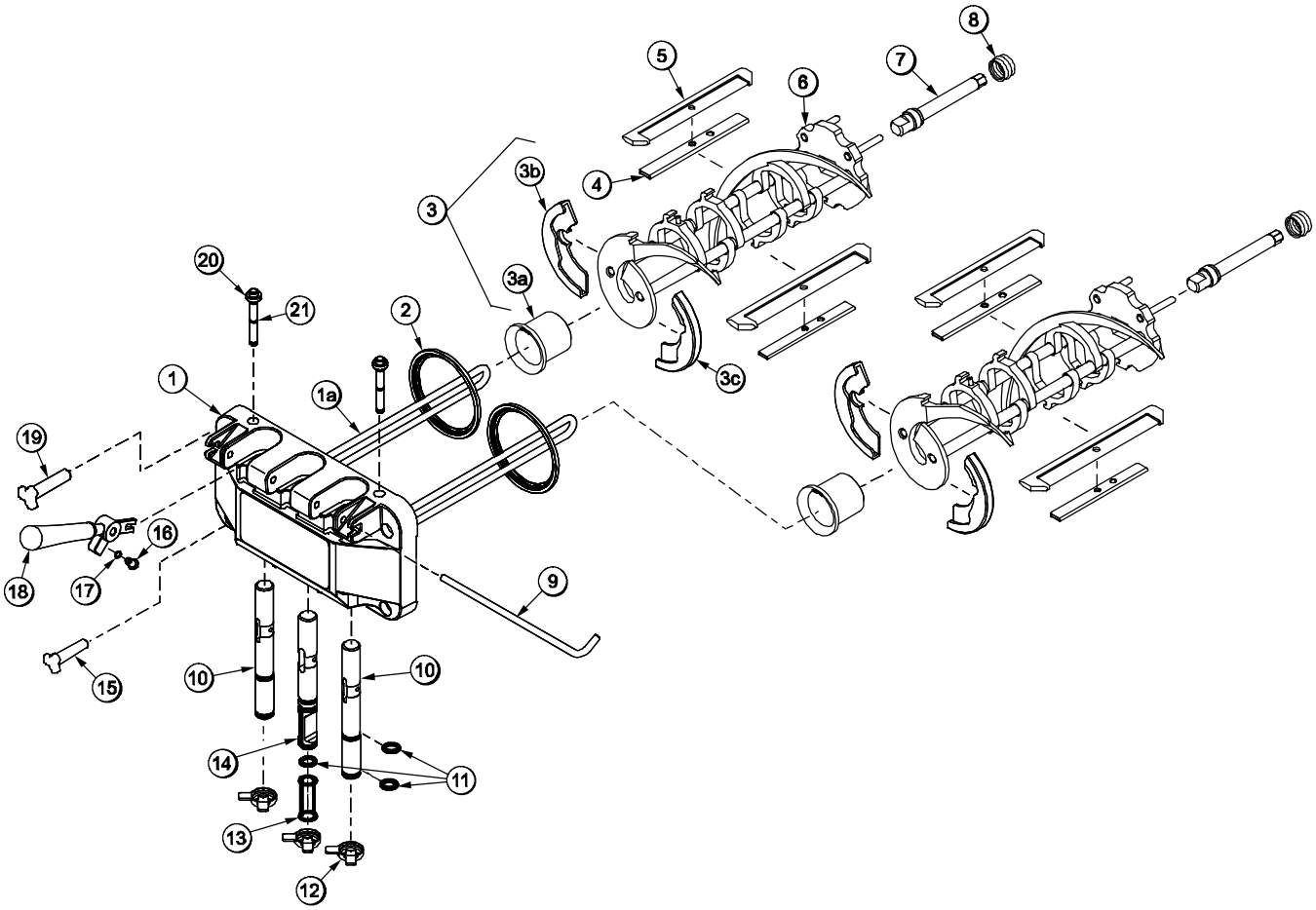

Figure 2

ITEM	DESCRIPTION	PART NO.
1	DOOR A.-SH BAF-W/PRG	X80157-SER
1a	BAFFLE A.-SHORT 4”	X50883
2	GASKET-DOOR HT 4"-DOUBLE	048926
3	KIT A.-BEATER-FRONT SHOES-BEARING	X50350
3a	BEARING-FRONT SHOE	*SEE NOTE
3b	SHOE-FRONT HELIX-FRONT	*SEE NOTE
3c	SHOE-FRONT HELIX-REAR	*SEE NOTE
4	CLIP-SCRAPER BLADE 5.50”	080293
5	BLADE-SCRAPER-PLASTIC	080292
6	BEATER A.-2.8QT-1 PIN	X80291
7	SHAFT-BEATER	081707
8	SEAL-DRIVE SHAFT	032560

ITEM	DESCRIPTION	PART NO.
9	PIN-HANDLE-TWIN	059894
10	VALVE A.-DRAW	X59843
11	O-RING-7/8 OD X .103W	014402
12	CAP-DESIGN 1.010"ID-6 POINT	014218
13	SEAL-DRAW VALVE-LARGE H	034698
14	VALVE A.-DRAW-CENTER	X62218
15	NUT-STUD-BLACK 2.563 LONG	058764
16	SCREW-ADJUSTMENT-5/16-24	056332
17	O-RING-1/4 OD X .070W	015872
18	HANDLE A.-DRAW	X56421-1
19	NUT-STUD-BLACK 3.250 LONG	058765
20	PLUG-PRIME TWIN	059936
21	O-RING-1/2OD X .070W	024278

*NOT AVAILABLE SEPARATELY. ORDER X50350 KIT.

130319

X69928-14S Pump A. - Mix Simplified S.S.

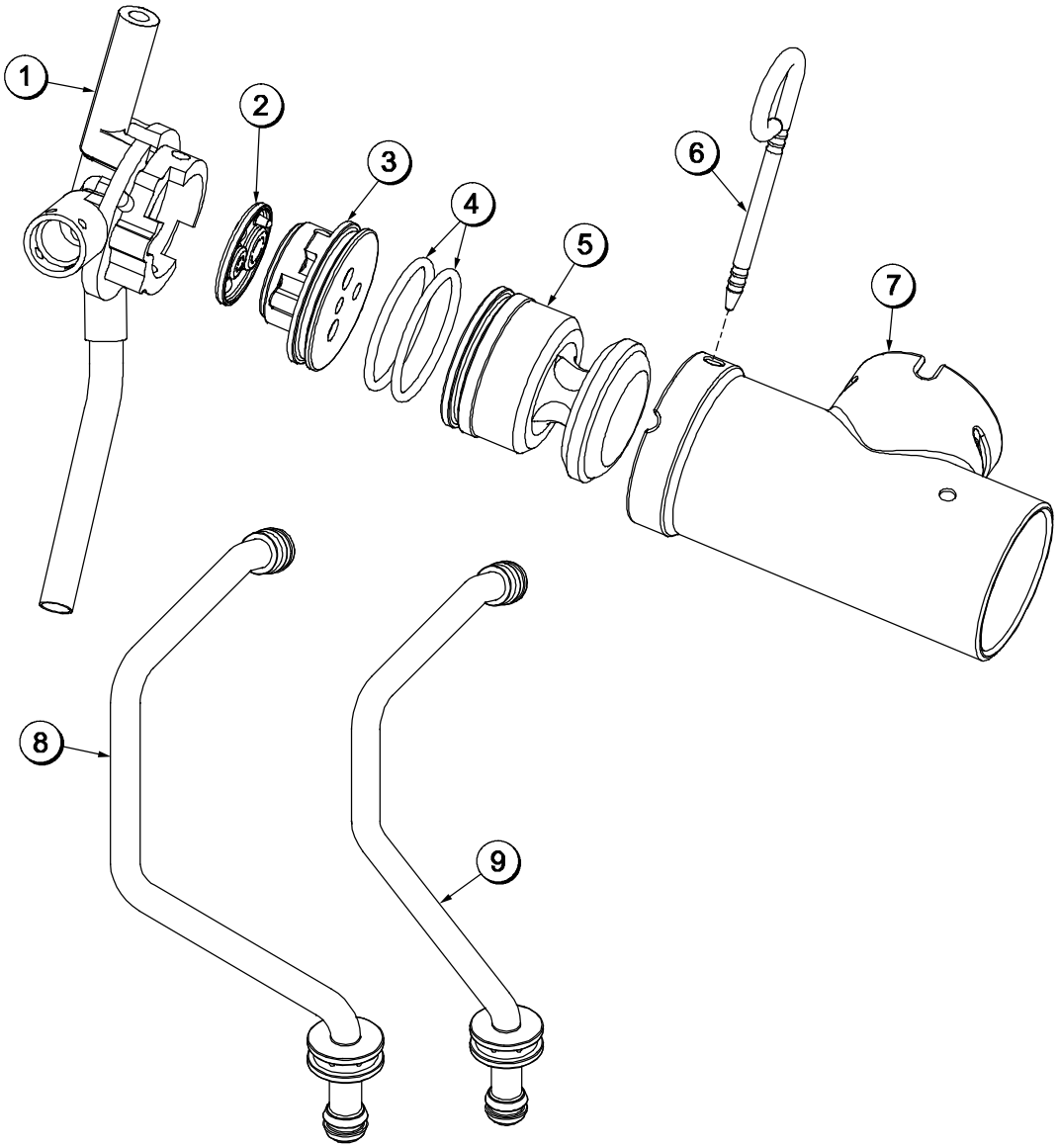

Figure 3

ITEM	DESCRIPTION	PART NO.
1	ADAPTOR A.-MIX INLET-SS	X80250
2	GASKET-SIMPLIFIED PUMP	053527
3	CAP-VALVE BODY SS	056874-14
4	O-RING-2-1/8 OD X .139W-#225	020051
5	PISTON-PUMP-SIMPLIFIED	069922

ITEM	DESCRIPTION	PART NO.
6	PIN-RETAINING	X55450
7	CYLINDER-PUMP HOPPER	069920
8	TUBE A.-FEED-LEFT	X69919
9	TUBE A.-FEED-RIGHT	X69924

Accessories

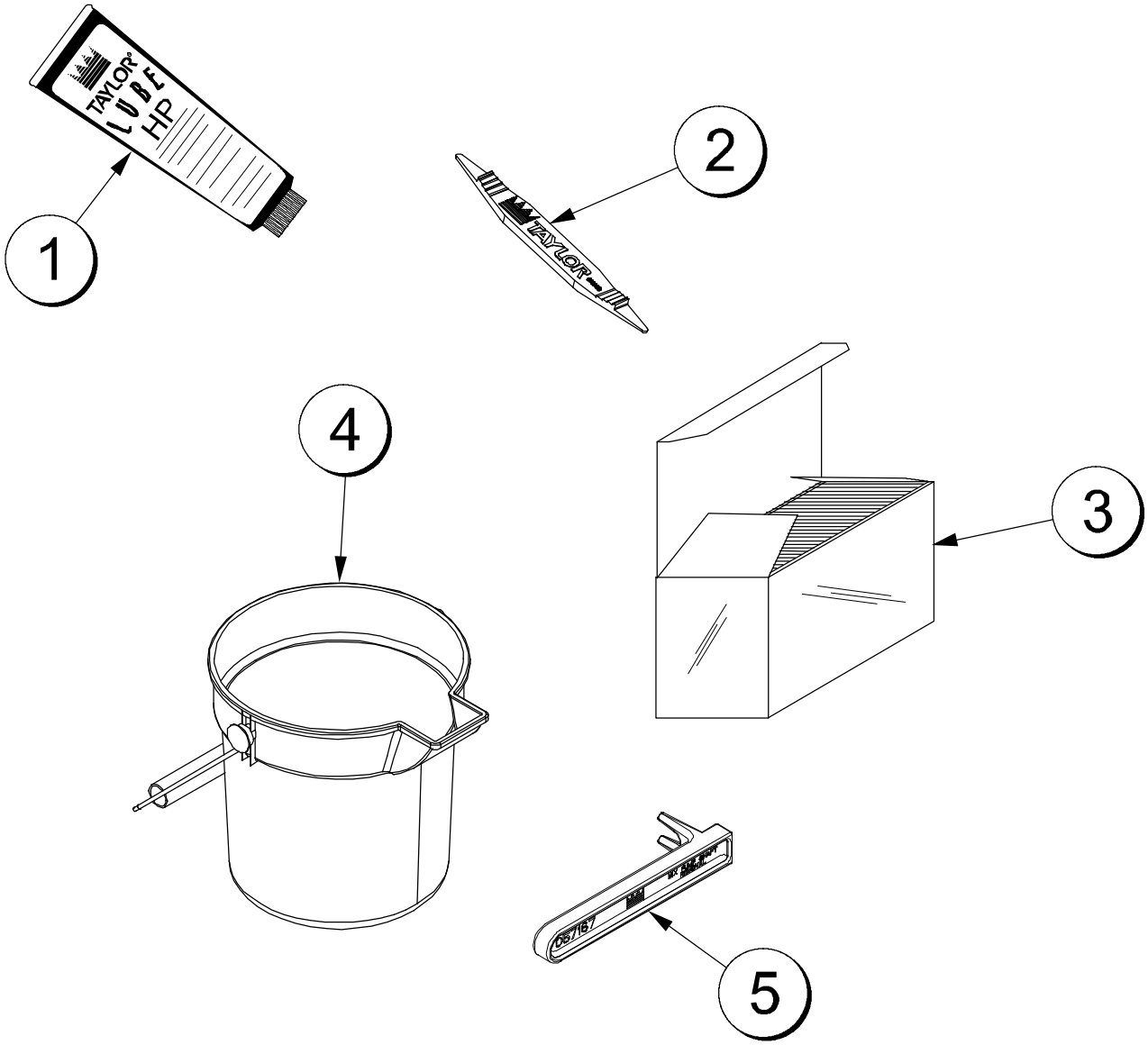

Figure 4

ITEM	DESCRIPTION	PART NO.
1	LUBRICANT-TAYLOR	047518
2	TOOL-O-RING REMOVAL	048260-WHT
*3	SANITIZER-STERA SHEEN	SEE NOTE
4	PAIL-MIX 10 QT	013163

ITEM	DESCRIPTION	PART NO.
5	TOOL-MIX PUMP SHAFT REMOVAL	057167
**	KIT A.-TUNE-UP	X49463-81

*A sample container of sanitizer is sent with the unit. For reorders, order Stera Sheen part no. 055492 (100 2 oz. packs) or Kay-5 part no. 041082 (200 packs).

**Not Shown.

130506

Brushes

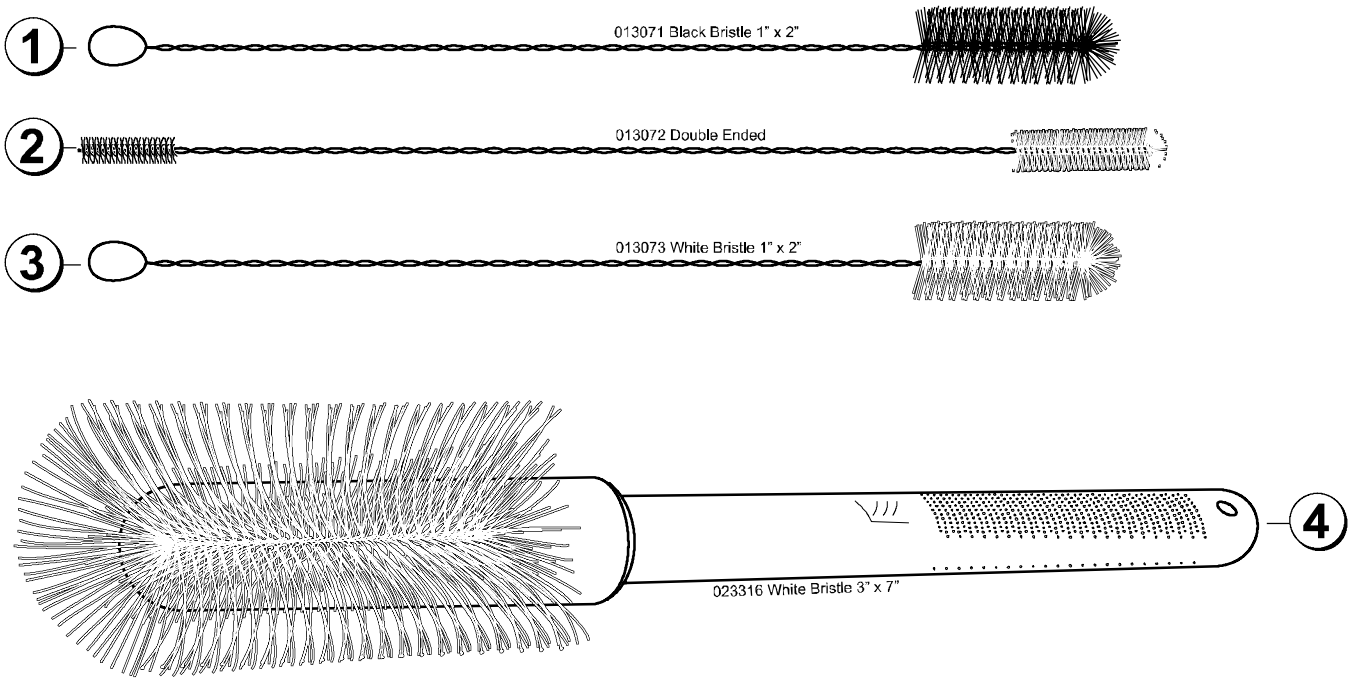

Figure 5

ITEM	DESCRIPTION	PART NO.
1	BLACK BRISTLE BRUSH	013071
2	DOUBLE END BRUSH	013072
3	WHITE BRISTLE BRUSH (1" x 2")	013073

ITEM	DESCRIPTION	PART NO.
4	WHITE BRISTLE BRUSH (3" x 7")	023316

Optional Carts

Cart A.-ADA (X69400)
C20600-AFB

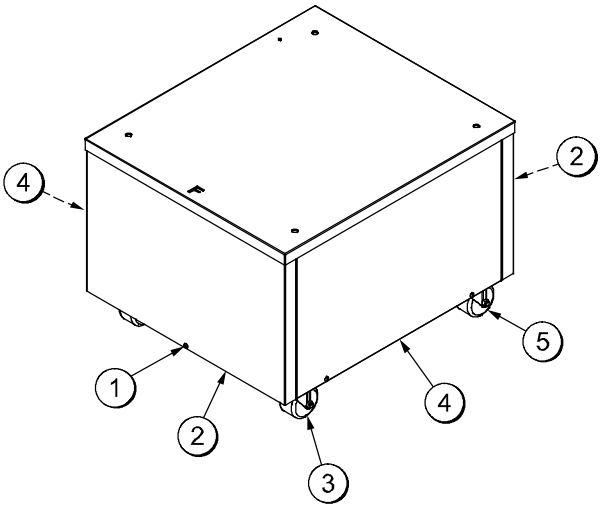

ITEM	DESCRIPTION	PART NO.
1	SCREW-10-32X1/2 SLTD TRUSS	037734
2	PANEL-FRONT/REAR-ADA	069402
3	CASTER-3" SWV 3/4-10 STEM W/BRAKE	030307
4	PANEL-SIDE-CART	069403
5	CASTER-3" SWV 3/4-10 STEM	021279

NOTE: ADA COMPLIANT HEIGHT CART, NOT EQUIPPED WITH A DOOR.

Cart A.-Std (X69425)
C20600-000

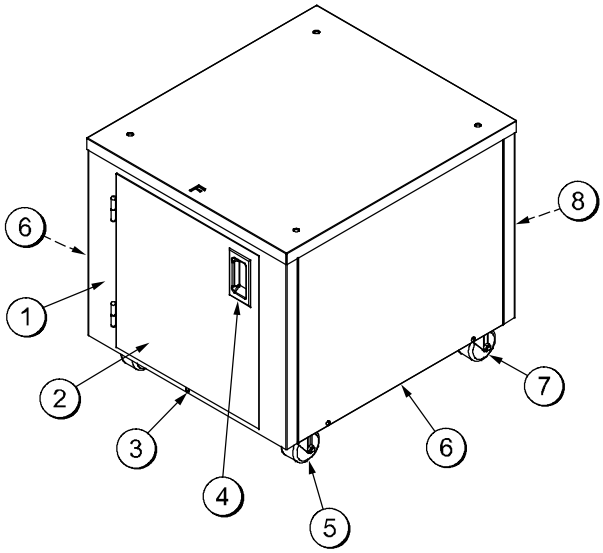

Figure 6

ITEM	DESCRIPTION	PART NO.
1	PANEL A.-STD CART-FRONT	X69426
2	DOOR A.-STD CART	X69295
3	SCREW-10-32X1/2 SLTD TRUSS	037734
4	HANDLE-STNLS FLUSH PULL	019043
5	CASTER-3" SWV 3/4-10 STEM W/BRAKE	030307
6	PANEL-SIDE-STD CART	069428
7	CASTER-3" SWV 3/4-10 STEM	021279
8	PANEL-REAR-STD CART	069429

NOTE: STANDARD HEIGHT CART WITH REVERSIBLE FRONT DOOR PANEL AND REAR PANEL.

Model C722

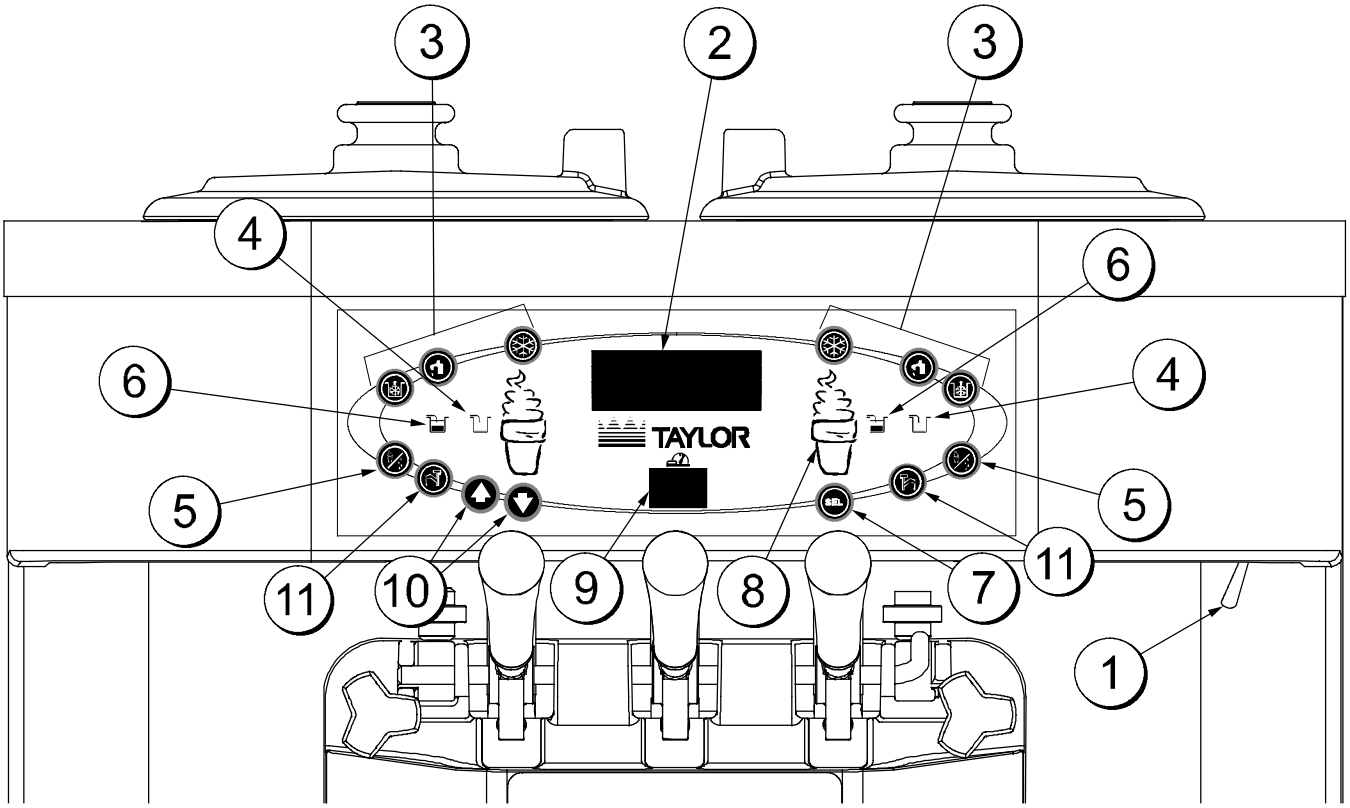

Figure 7

ITEM	DESCRIPTION
1	POWER SWITCH
2	LIQUID CRYSTAL DISPLAY
3	KEYPADS
4	MIX OUT INDICATORS
5	STANDBY INDICATORS
6	MIX LOW INDICATORS
7	SELECT KEY
8	SERVICE MENU KEY
9	BRUSH CLEAN COUNTER
10	ARROW KEYS
11	TOPPING HEATER KEYS (NOT FUNCTIONAL)

Symbol Definitions

To better communicate in the International arena, symbols have replaced words on many of our operator switches, function, and fault indicators. Your Taylor equipment is designed with these International symbols.

The following chart identifies the symbol definitions.

= SELECT

= ON

= OFF

= UP ARROW

= DOWN ARROW

= AUTO

= WASH

= MIX LOW

= MIX OUT

= MENU DISPLAY

= MIX PUMP

= STANDBY

= TOPPING HEATER-LEFT

= TOPPING HEATER-RIGHT

Power Switch

When placed in the ON position, the power switch allows control panel operation.

Fluorescent Display

The fluorescent display is located on the front control panel. During normal operation, the display is blank. The display is used to show menu options and notifies the operator if a fault is detected. On International models, the display will indicate the temperature of the mix in the hopper.

Indicator Lights

MIX LOW - When the MIX LOW symbol is illuminated, the mix hopper has a low supply of mix and should be refilled as soon as possible.

MIX OUT - When the MIX OUT symbol is illuminated, the mix hopper has been almost completely exhausted and has an insufficient supply of mix to operate the freezer. At this time, the AUTO mode is locked out and the freezer will be placed in the STANDBY mode. To initiate the refrigeration system, add mix to the mix hopper and touch the AUTO symbol . The freezer will automatically begin operation.

Optional feature: Some freezers are equipped with rear indicator lights.

Standby Symbol

During long “No Sale” periods, the unit can be placed into the Standby mode. This maintains product temperatures below 40°F (4.4°C) in both the hopper and the freezing cylinder, and helps prevent overbeating and product breakdown.

To activate Standby, select the STANDBY key or enter the access code for the Manager Menu and select the Standby Mode option (see pages 19 and 22). The STANDBY symbol will illuminate, indicating the Standby feature has been activated.

Note: To resume normal operation, press the AUTO symbol. When the unit cycles off, the product in the freezing cylinder will be at serving viscosity.

Wash Symbol

The WASH symbol will illuminate when it is touched. This indicates beater motor operation. The STANDBY or AUTO modes must be cancelled first to activate the WASH mode.

Auto Symbol

The AUTO symbol will illuminate when it is touched. This indicates that the refrigeration system has been activated. In the AUTO mode, the WASH or STANDBY functions are automatically cancelled.

Note: An indicating light and an audible tone will sound whenever a mode of operation has been selected. To cancel any function, touch the key again. The light and the mode of operation will shut off.

Topping Heater Symbols

The TOPPING HEATER symbols are not functional on the Model C722.

Reset Mechanism

The reset buttons are located in the left side panel of the machine. They protect the beater motors from an overload condition. Should an overload occur, the reset mechanism will trip. To properly reset the freezer, place the power switch in the OFF position. Press the reset button firmly. Turn the power switch to the ON position. Touch the WASH symbol and observe the freezer's performance.

WARNING: Do not use metal objects to press the reset button. Failure to comply may result in severe personal injury or death.

If the beater motor is turning properly, touch the WASH symbol to cancel the cycle. Touch the AUTO symbol to resume normal operation. If the freezer shuts down again, contact your authorized service technician.

Adjustable Draw Handle

This unit features an adjustable draw handle to provide the best portion control, giving a better, consistent quality to your product and controlling costs. The draw handle should be adjusted to provide a flow rate of 5 to 7-1/2 oz. (142 to 213 g.) of product by weight per 10 seconds. To INCREASE the flow rate, tighten the screw. To DECREASE the flow rate, loosen the screw. (See Figure 8.)

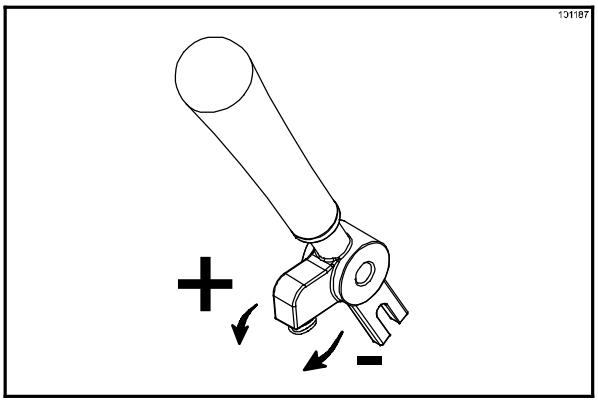

Figure 8

Operating Screen Descriptions

The fluorescent display located in the center of the control panel is normally blank during the daily operation of the machine. The display is activated when the SEL symbol or the Manager's Menu is selected. The display screen will also alert the operator of specific faults detected by the control.

Power Up

When the machine is powered, the control system will initialize to perform a system check. The screen will display “INITIALIZING”. There are four types of data the system will check: LANGUAGE, SYSTEM DATA, CONFIG DATA, and LOCKOUT DATA.

If the system detects corrupt data during “Initializing.....”, the detected faults will be displayed for acknowledgement after the “SAFETY TIMEOUT” display, if the power switch is on. The faults may be “CORRUPTED LANGUAGE,” CONFIG CRC ERR,” “SYSTEM CRC ERR, “FAULT HISTORY, ”LOCKOUT CRC ERR,” or “POWER FAILURE.”

Once the system has initialized, the number of days remaining before the next required brush cleaning is indicated on the control panel and the SAFETY TIMEOUT screen is displayed with the alarm turned on. (See Figure 9.)

SAFETY TIMEOUT
ANY KEY ABORTS

Figure 9

The SAFETY TIMEOUT screen will be displayed with the alarm on for 60 seconds, or until any control symbol is selected.

After the safety timeout has been completed and the power switch is OFF, the following screen is displayed. (See Figure 10.)

POWER SWITCH OFF
- = - = - = - = - = -
UNIT CLEANED

Figure 10

Power Switch ON

When the power switch is placed in the ON position, the control panel touch keys become operative. The fluorescent display will be either blank or will indicate that the unit has been cleaned. (See Figure 11.)

UNIT CLEANED

Figure 11

Brush Clean Counter

The Brush Clean Counter (item 9 on page 15) will display the number of hours since the freezer was last brush cleaned. After hour 99, it will change to a letter and a number (example: A0, A1, ... B0, B1, etc.).

Manager's Menu

The Manager's Menu is used to enter the operator function displays. To access the Menu, touch the center of the CONE symbol on the control panel on the right side of the machine. The arrow symbols, the SEL symbol, and the CONE symbol will be lit when the ACCESS CODE screen is displayed. (See Figure 12.)

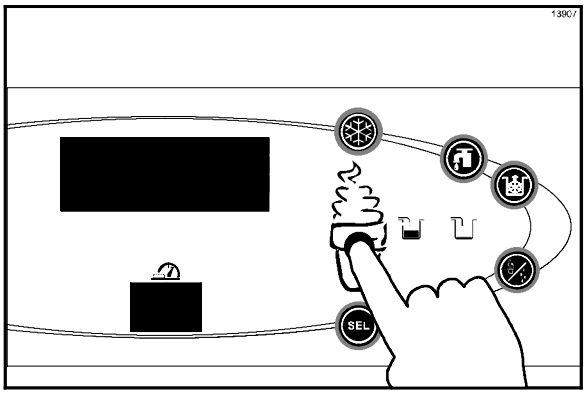

Figure 12

In the Menu program, the arrow symbols and the SEL symbol will function as menu keys.

UP ARROW - increases the value above the cursor and is used to scroll upward in text displays.

DOWN ARROW - decreases the value above the cursor and is used to scroll downward in text displays.

SEL - advances the cursor position to the right and is used to select menu options.

Note: The machine will continue operation in the mode it was in when the menu was selected. However, the control keys will not be lit and are non-functional when the Manager's Menu is displayed.

Entering Access Code

With the ACCESS CODE screen on the display, use the SEL symbol to set the first code number in the cursor position. When the correct number is selected, touch the SEL symbol to move the cursor to the next number position. (See Figure 13.)

ENTER ACCESS CODE

8 3 0 9

Figure 13

Continue to enter the proper access code numbers (8309) until all four numbers are displayed, and then touch the SEL symbol. The Manager's menu list will display on the screen, provided the correct access code is entered.

If an incorrect number is entered for the access code, the display will exit the Menu program when the SEL symbol is selected. (See Figure 14.)

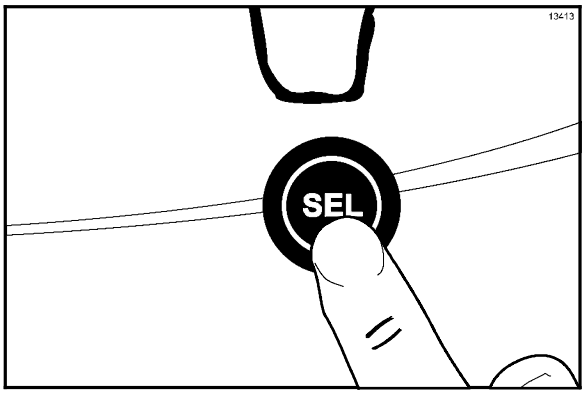

Figure 14

Menu Options

Touch the ARROW symbols to move up or down through the Menu. Select a Menu option by touching the SEL symbol. Exit the Menu program by selecting EXIT FROM MENU or touch the CONE symbol .

The following menu options are listed in the Manager's Menu.

EXIT FROM MENU
SERVINGS COUNTER
SET CLOCK
AUTO START TIME
STANDBY MODE
MIX LEVEL AUDIBLE
FAULT DESCRIPTION
FAULT HISTORY
LOCKOUT HISTORY
SYSTEM INFORMATION
CURRENT CONDITIONS
NET SERVICE PIN

Selecting “EXIT FROM MENU” will exit the Manager's Menu and then return the control panel symbols to normal operation.

The SERVINGS COUNTER screen is used to reset the servings counter to zero. (Note: The SERVINGS COUNTER automatically resets to zero when the machine is brush cleaned.) (See Figure 15.)

```
                SERVINGS COUNTER

            0        0        0
> Next
```

Figure 15

Reset the SERVINGS COUNTER by selecting the SEL symbol to advance to the next screen. Select the UP arrow symbol to move the arrow (>) to YES and touch the SEL symbol. The servings counter will reset to zero and exit back to the Manager's Menu. (See Figure 16.)

```
            Reset Counters
            ARE YOU SURE?
            Yes
>           No
```

Figure 16

The SET CLOCK option allows the Manager to adjust the control clock date and time. The date and time may only be changed after the freezer has been manually cleaned, but before it has been placed in the AUTO or STANDBY mode. The following message will be displayed if the SET CLOCK option is selected when the machine is not in a brush clean state. (See Figure 17.)

```
SET CLOCK
12:01              2/10/2012
NO CHANGES ALLOWED
Press Any Key
```

Figure 17

To change the date or time, select the SET CLOCK option in the menu. Touch the UP arrow symbol to advance the arrow from “Exit” to “Change”, and then touch the SEL symbol to select the Change option. (See Figure 18.)

```
SET CLOCK
12:01              2/10/2012
  Change
> Exit
```

Figure 18

Change the time by touching the UP arrow with the cursor under the hour position. Move the cursor to the minutes position by touching the SEL symbol. Once the correct minutes are entered, touch the SEL symbol to advance the cursor to the month. (See Figure 19.)

```
SET CLOCK
12:01              2/10/2012

> Exit
```

Figure 19

Enter the correct month, day, and year. After they have been entered, touch the SEL symbol to advance to the DAYLIGHT SAVING TIME (DST) screen. (See Figure 20.)

```
DAYLIGHT SAVING TIME
ENABLED
>       Enable
        Disable
```

Figure 20

Pressing the UP or DOWN arrow symbols will move the arrow to “Enable” or “Disable”. Pressing the SEL symbol next to “Disable” selects that option and returns to the Manager Menu. Pressing the SEL symbol next to “Enable” selects that option and displays the second screen. (See Figure 21.)

```
MAR Second Sunday
NOV First Sunday
  Change
> Exit
```

Figure 21

If the correct Sunday for the time change is not displayed, then “Change” should be selected. Pressing the SEL symbol with the arrow next to “Change” displays the third screen. Press the UP or DOWN symbol to move the arrow to the appropriate month for the start of DST. (See Figure 22.)

```
DST START MONTH
>       MAR
        APR
        MAY
```

Figure 22

Pressing the SEL symbol with the arrow next to the appropriate month will display the following screen. (See Figure 23.)

```
DST START WEEK
>       Second Sunday
        Third Sunday
        Fourth Sunday
```

Figure 23

Pressing the UP or DOWN symbol will move the arrow to the appropriate week for the start of DST. Pressing the SEL symbol next to the appropriate week will display the following screen. Press the UP or DOWN symbol to move the arrow to the appropriate month for the end of DST. (See Figure 24.)

```
DST END MONTH

>       NOV
        DEC
```

Figure 24

Pressing the SEL symbol next to the appropriate month will display the following screen. Press the UP or DOWN symbol to move the arrow to the appropriate week for the end of DST. (See Figure 25.)

```
DST END WEEK
>       First Sunday
        Second Sunday
        Third Sunday
```

Figure 25

Pressing the SEL symbol with the arrow by the appropriate week will select that setting and return to the Manager's Menu.

The AUTO START TIME option allows the Manager to set the time of day at which the machine automatically enters the AUTO mode from the STANDBY mode. The machine must be in the STANDBY mode in order to AUTO start at the programmable time. The AUTO START TIME can also be disabled and require starting the AUTO mode manually. (See Figure 26.)

```
AUTO START TIME
DISABLED
        Enable
>       Disable
```

Figure 26

Enable the AUTO START TIME by selecting the UP arrow symbol to move the arrow to “Enable.” Touch the SEL symbol to advance to the next screen. (See Figure 27.)

```
                AUTO START TIME
                      00:00
          Change
>         Exit
```

Figure 27

Program the AUTO START TIME by selecting the UP arrow symbol to move the arrow to “Change.” Touch the SEL symbol to advance to the next screen. (See Figure 28.)

```
AUTO START TIME
00:00
```

Figure 28

Use the arrow symbols to program the AUTO START TIME by increasing or decreasing the hour setting above the cursor. Touch the SEL symbol to advance the cursor and program the minutes setting. Select the SEL symbol to return to the previous screen with the new time setting displayed. Select the SEL symbol to exit the screen and return to the Manager's Menu.

The STANDBY option is used to manually place either side of the machine in the Standby mode during long, no draw periods. Select the STANDBY screen from the Menu. Touch the SEL symbol to activate Standby.

Discontinue Standby operation by exiting the Manager's Menu and selecting the AUTO mode. (See Figure 29.)

```
STANDBY MODE
  LEFT
  RIGHT
> Exit
```

Figure 29

The MIX LEVEL AUDIBLE option, when enabled, will alert the operator with an audible tone when there is a mix low or mix out condition. The following screen is displayed upon selecting this option. (See Figure 30.)

```
              MIX LEVEL AUDIBLE
                   ENABLED
>         Enable
          Disable
```

Figure 30

Disable the audible tone feature by selecting the DOWN arrow symbol to move the arrow to “Disable.” Select the SEL symbol to save the new setting and return to the Manager's Menu. The control panel icons for Mix Low and Mix Out will light as the mix level drops in the hopper but the audible tone will be disabled.

The FAULT DESCRIPTION screen lists any faults detected by the control and allows the Manager to clear them from the system. Faults are displayed on the second and/or third line. (See Figure 31.)

```
FAULT DESCRIPTION
L: Beater Overload
R: Beater Overload
```

Figure 31

Pressing the SEL symbol displays the next fault or returns to the Manager's Menu if no other faults exist. Pressing the SEL symbol any time faults are displayed will clear corrected faults upon returning to the Manager's Menu. Press the Menu symbol to return to the Manager's Menu.

The FAULT HISTORY screen displays a history of the last 100 faults. Page numbers are displayed in the upper right-hand corner. Page 1 contains the most recent fault. Use the arrow symbols to cycle through the history pages. The date and time of the event are displayed on the second line. The third line displays the reason for the fault.
(See Figure 32.)

```
FAULT HISTORY                    1
 02/27/12                    12:58
 HPCO COMPRESSOR
> Exit
```

Figure 32

The LOCKOUT HISTORY screen displays a history of the last 100 hardlocks, brush clean dates, etc. (See Figure 33.)

```
LOCKOUT HISTORY
02/27/12                     12:58
<        HPR THERM FAIL
>        Exit
```

Figure 33

Use the arrow symbols to advance forward or backward to view each screen. The following list indicates the variable messages that may appear. Press the SEL key to return to the Manager's Menu.

Note: If no fault was found, the message will state, **"NO FAULT FOUND".**

Faults Occurring While in AUTO or Standby Mode

BEATER OVERLOAD - Place the power switch in the OFF position. Wait 5 minutes for the machine to cool. Press the beater reset button firmly. Place the power switch in the ON position and restart in AUTO.

HPCO COMPRESSOR - Place the power switch in the OFF position. Wait 5 minutes for the machine to cool. Place the power switch in the ON position and restart in AUTO.

L - R HPR Therm Fail - The hopper thermistor failed. Call for service.

L - R BRL Therm Fail - The freezing cylinder thermistor failed. Call for service.

L - R HPR>59F (15C) - The mix temperature in the hopper exceeded 59°F (15°C).

L - R BRL>59F (15C) - The mix temperature in the freezing cylinder exceeded 59°F (15°C).

L - R HPR>45F (7C) AFTER 1 HR - The mix temperature in the hopper was above 45°F (7°C) more than one hour.

L - R BRL>45F (7C) AFTER 1 HR - The mix temperature in the freezing cylinder was above 45°F (7°C) more than one hour.

L - R HPR>41F (5C) AFTER 4 HR - The mix temperature in the hopper was above 41°F (5°C) more than four hours.

L - R BRL>41F (5C) AFTER 4 HR - The mix temperature in the freezing cylinder was above 41°F (5°C) more than four hours.

L - R HPR>41F (5C) AFTER PF - The mix temperature in the hopper was above 41°F (5°C) more than four hours, following a power failure.

L - R BRL>41F (5C) AFTER PF - The mix temperature in the freezing cylinder was above 41°F (5°C) more than four hours, following a power failure.

Note: Refer to your local health codes regarding temperature recommendations for procedures to follow if these fault screens appear.

The SYSTEM INFORMATION is displayed on three separate screens. The first screen contains the control and software version installed in the machine. (See Figure 34.)

```
SOFTWARE VERSION
  C722 CONTROL UVC4
  VERSION V00.00.000
> Next
```

Figure 34

Touch the SEL symbol to advance to the next system information screen containing the software language version. (See Figure 35.)

```
Language
V4.00 English

> Next
```

Figure 35

Touch the SEL symbol to advance to the third system information screen containing the model bill of material and machine serial number. Touching the SEL symbol again will return to the Manager's Menu. (See Figure 36.)

```
B.O.M.  C700000000
S/N     K0000000

> Next
```

Figure 36

The CURRENT CONDITIONS screen displays the current viscosity, and the hopper and barrel temperatures. Press the SEL or MENU symbols to return to the Manager's Menu. (See Figure 37.)

```
VISC        0.0    0.0
HOPPER     41.0   41.0
BARREL     41.0   41.0
```

Figure 37

The NET SERVICE PIN screens allows the Manager to initialize a network connection for networking kitchens. (See Figure 38.)

```
 NET SERVICE PIN
   ARE YOU SURE?
   Yes
> No
```

Figure 38

Use the arrow symbols to move the arrow up or down. Pressing the SEL symbol with the arrow next to “No” will return to the Manager's Menu. Pressing the SEL symbol with the arrow next to “Yes” will connect to the network if a gateway card is connected.

Note: If “Yes” is selected, it may take a few moments for the memory to clear and the defaults to load. The display may show the message “COMMUNICATIONS FAILURE” during this time.

Section 6 Operating Procedures

The Model C722 is a medium capacity soft serve machine. Mix is stored in the hoppers. The unit is equipped with a three spout door and two 2.8 quart (2.7 liter) capacity freezing cylinders.

We begin our instructions at the point where we enter the store in the morning and find the parts disassembled and laid out to air dry from the previous night's cleaning.

These opening procedures will show you how to assemble the parts into the freezer, sanitize them, and prime the freezer with fresh mix in preparation to serve your first portion.

If you are disassembling the machine for the first time or need information to get to this starting point in our instructions, turn to page 36, “Disassembly”, and start there.

Assembly

Note: When lubricating parts, use an approved food grade lubricant (example: Taylor Lube).

MAKE SURE THE POWER SWITCH IS IN THE “OFF” POSITION! Failure to follow this instruction may result in severe personal injury from hazardous moving parts.

Step 1
Lubricate the groove on the beater drive shaft.

Step 2
Slide the beater drive shaft boot seal over the small end of the beater drive shaft and engage into the groove on the shaft.

Step 3
Heavily lubricate the inside portion of the boot seal. Also lubricate the flat end of the boot seal that comes in contact with the rear shell bearing.

Step 4
Apply an even coat of lubricant to the shaft.
DO NOT lubricate the hex end.

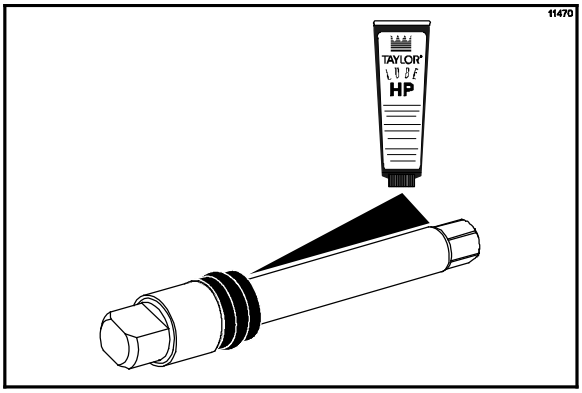

Figure 39

Note: To ensure that mix does not leak out of the back of the freezing cylinder, the middle section of the boot seal should be convex or extend out from the seal. If the middle section of the boot seal is concave or extending into the middle of the seal, turn the seal inside out.

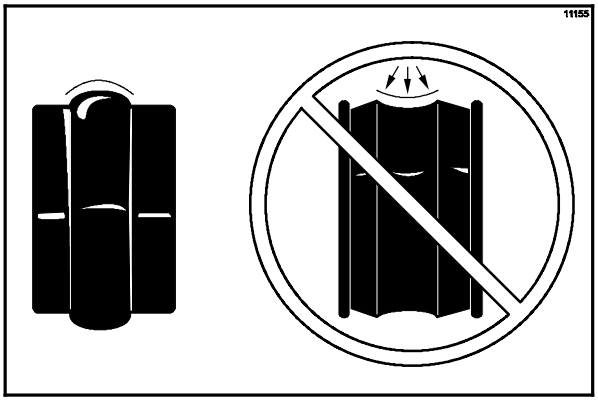

Figure 40

Step 5
Insert the beater drive shaft through the rear shell bearing in the freezing cylinder and engage the hex end firmly into the drive coupling.

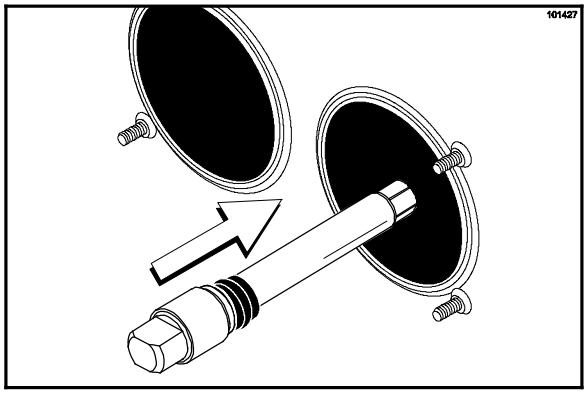

Figure 41

USE EXTREME CAUTION when handling the beater assembly. The scraper blades are very sharp and may cause injury.

Step 6
Before installing the beater assembly, check the scraper blades for any nicks or signs of wear. If any nicks are present, or if the blades are worn, replace both blades.

If the blades are in good condition, install the scraper blade clips over the scraper blades. Place the rear scraper blade over the rear holding pin on the beater. (See Figure 42.)

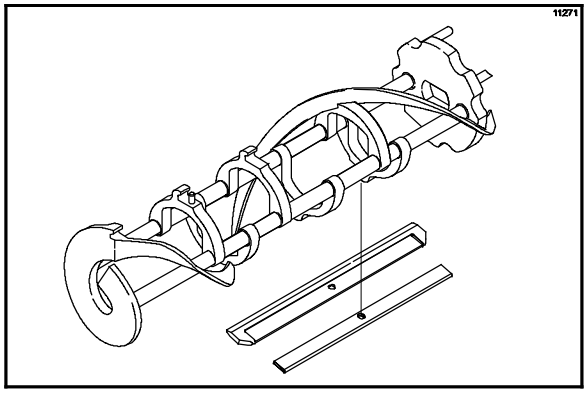

Figure 42

Note: Scraper blades should be replaced every 3 months.

Note: The hole on the scraper blade must fit securely over the pin to prevent costly damage.

Step 7
Holding the rear blade on the beater, slide it into the freezing cylinder halfway. Install the front scraper blade over the front holding pin. (See Figure 43.)

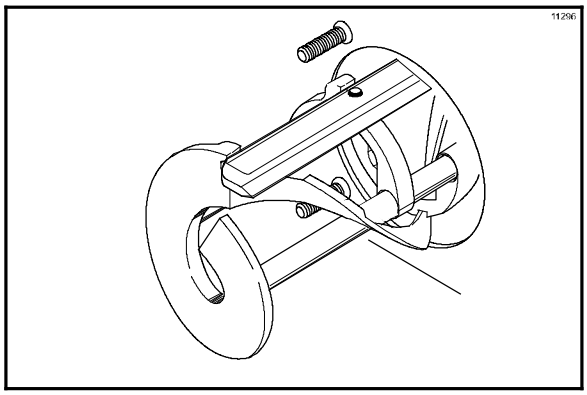

Figure 43

Step 8
Install the beater shoes. (See Figure 44.)

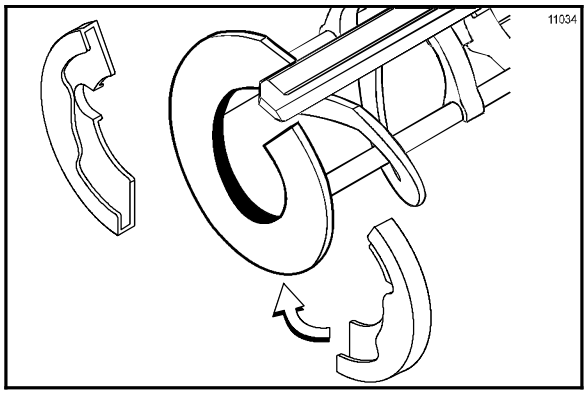

Figure 44

Step 9
Slide the beater assembly the rest of the way into the freezing cylinder.

Make sure the beater assembly is in position over the drive shaft by turning the beater slightly until the beater is properly seated. When in position, the beater will not protrude beyond the front of the freezing cylinder. (See Figure 45.)

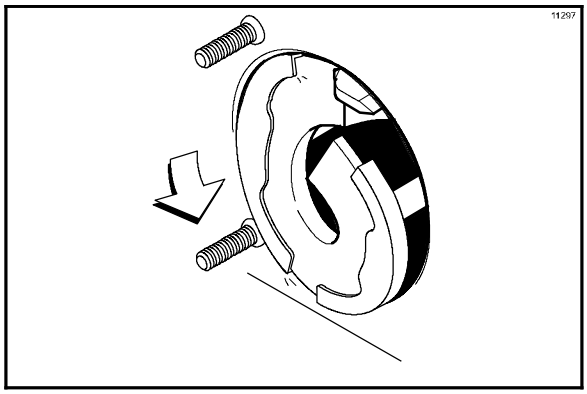

Figure 45

Repeat these steps for the other side of the machine.

Step 10
To assemble the freezer door, place the door gaskets into the grooves on the back of the freezer door. Do not lubricate the gaskets.

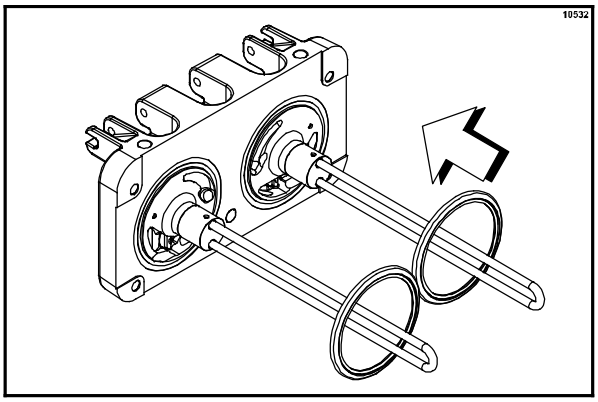

Figure 46

Step 11
Slide the front bearings over the baffle rods. The flanged edges should be against the door. **DO NOT lubricate the gaskets or front bearings.**

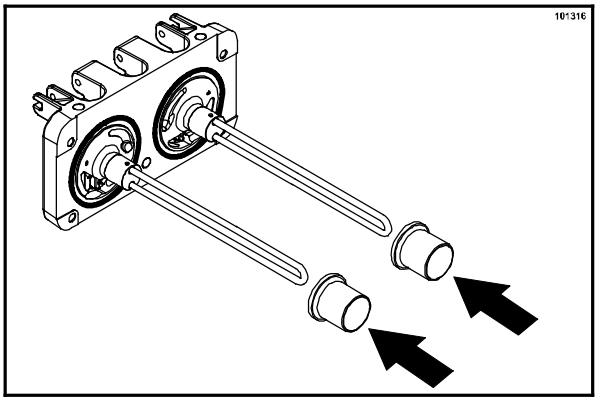

Slide the two o-rings into the grooves on each prime plug. Apply an even coat of Taylor Lube to the o-rings and shafts.

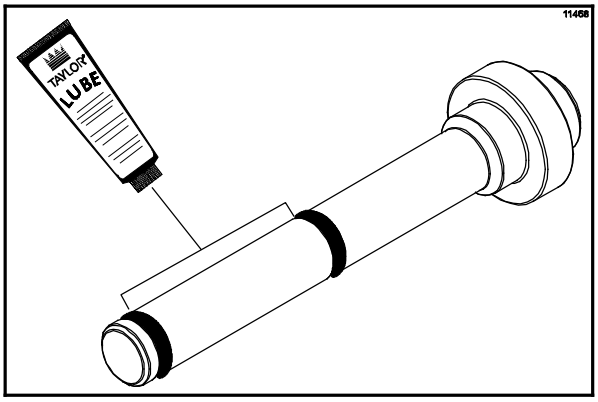

Figure 47

Step 12
Insert the prime plugs into the holes in the top of the freezer door, and push down.

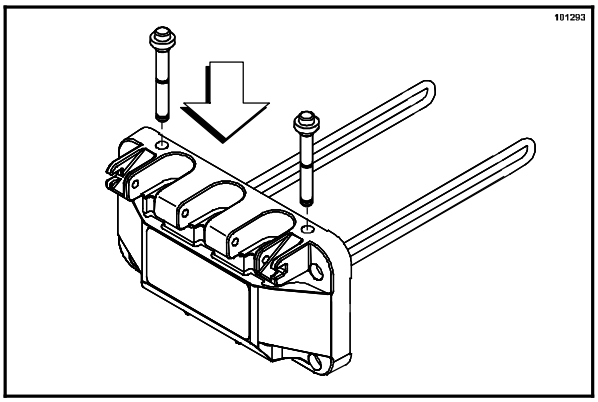

Figure 48

Step 13
To install the freezer door, insert the baffle rods through the beaters in the freezing cylinders.

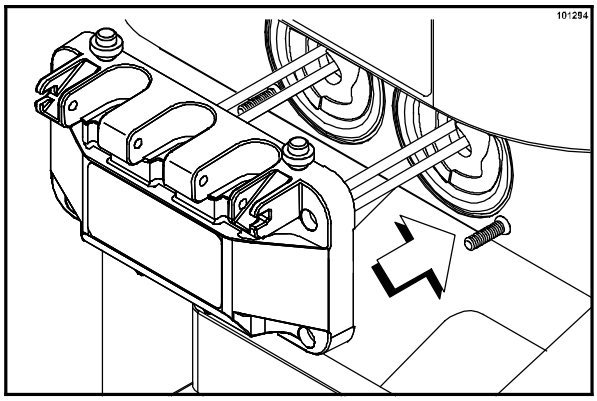

Figure 49

With the door seated on the freezer studs, install the handscrews. Use the long handscrews on the top and the short handscrews on the bottom. Tighten them equally in a criss-cross pattern to insure the door is snug.

Step 14
Slide the three o-rings into the grooves of each standard draw valve. Slide the H-ring and o-ring into the grooves of the center draw valve. Lubricate the H-ring and o-rings.

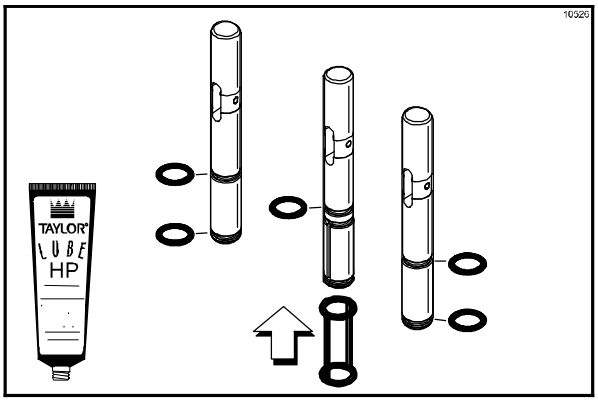

Figure 50

Step 15
Lubricate the inside of the freezer door spouts, top and bottom.

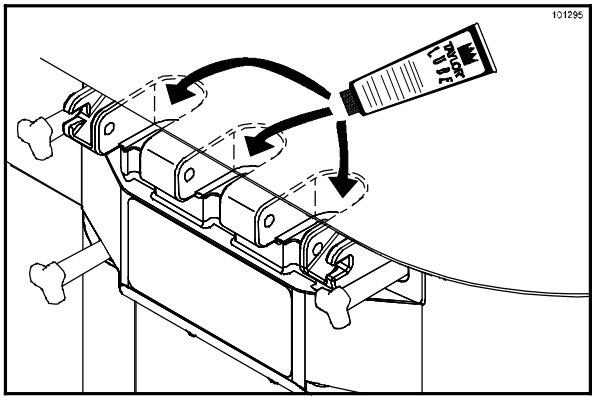

Figure 51

Step 16
Insert the draw valves from the bottom until the slot in each draw valve comes into view.

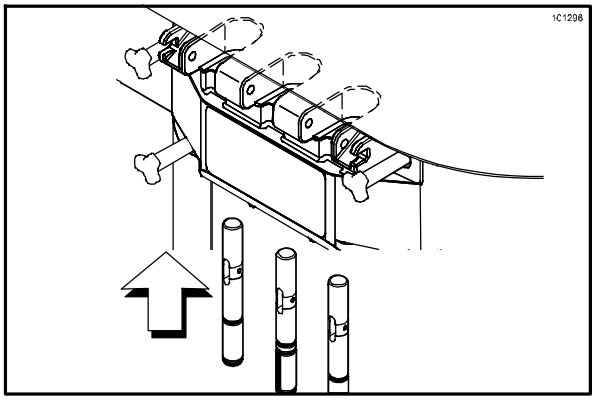

Figure 52

Step 17
Position each draw handle with the adjustment screw facing down. Slide the fork of each draw handle into the slot of each draw valve, starting from the right.

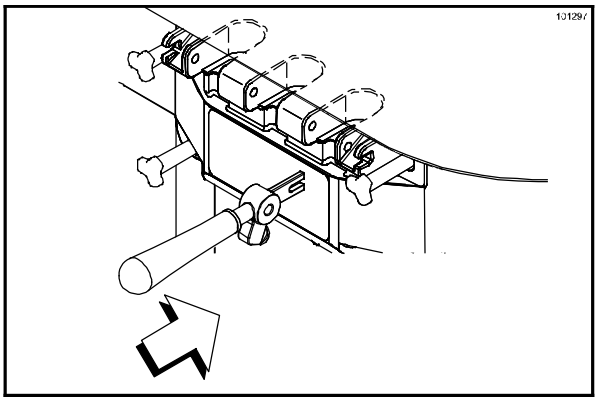

Figure 53

Step 18
Slide the pivot pin through the draw handles as the handles are inserted into the draw valves.

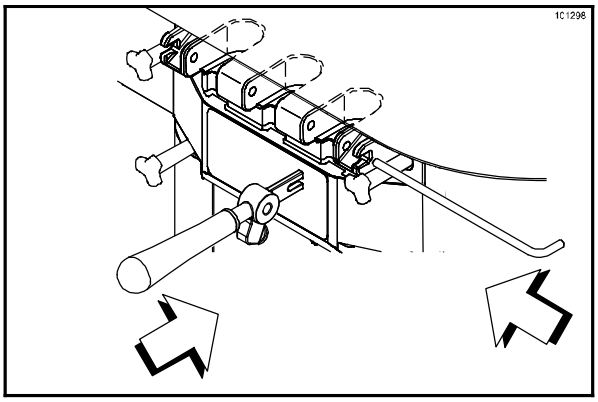

Figure 54

Note: This freezer features three adjustable draw handles to provide portion control, giving a better consistent quality to your product and controlling costs. The draw handle should be adjusted to provide a flow rate of 5 to 7-1/2 oz. (142 g. to 213 g.) of product by weight per 10 seconds.

To INCREASE the flow rate, tighten the screw. To DECREASE the flow rate, loosen the screw.

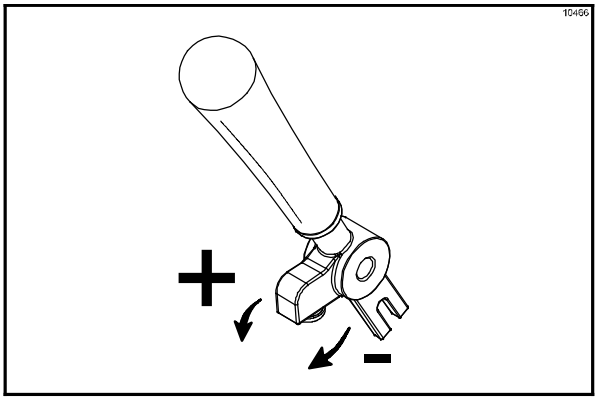

Figure 55

Step 19
Snap the design caps over the bottom of the door spouts.

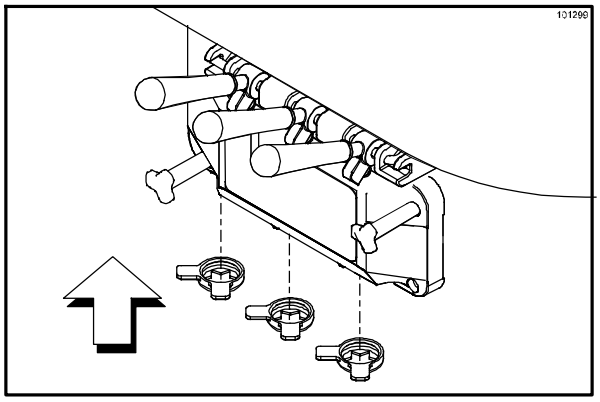

Figure 56

Step 20
Slide the drip pan into the hole in the front panel.

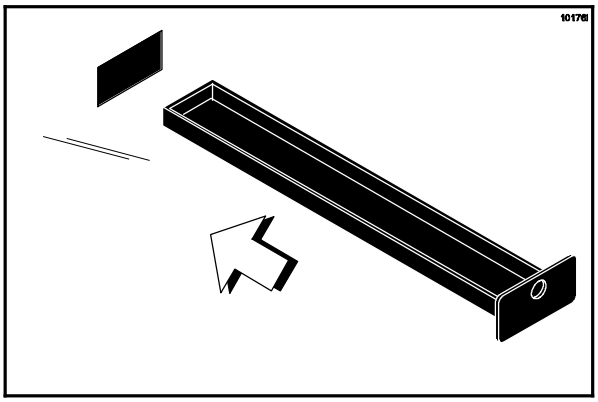

Figure 57

Step 21
Install the front drip tray and splash shield under the door spouts.

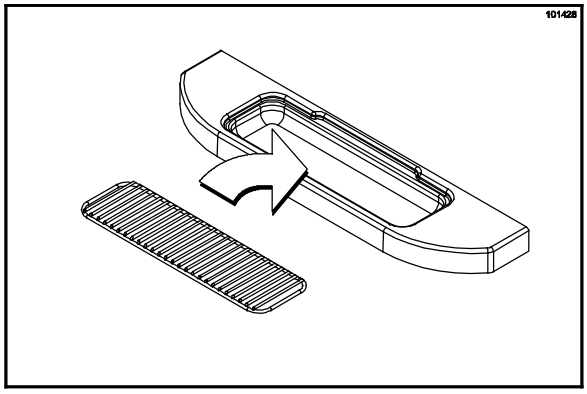

Figure 58

Mix Pump Assembly

Step 1
Inspect the rubber pump parts. O-rings and gasket must be in 100% good condition for the pump and entire machine to operate properly. The o-rings and gasket cannot properly serve their intended function if nicks, cuts, or holes in the material are present.

Replace any defective parts immediately and discard the old.

Step 2
Assemble the piston. Slide the red o-ring into the groove of the piston. DO NOT lubricate the o-ring. (See Figure 59.)

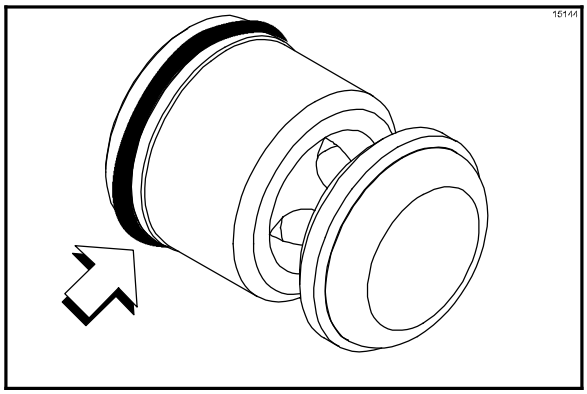

Figure 59

Step 3
Apply a thin layer of lubricant to the inside of the pump cylinder at the retaining pin hole end. (See Figure 60.)

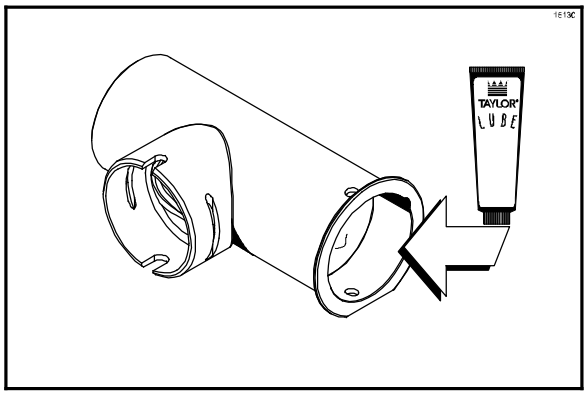

Figure 60

Step 4
Insert the piston into the retaining pin hole end of the pump cylinder. (See Figure 61.)

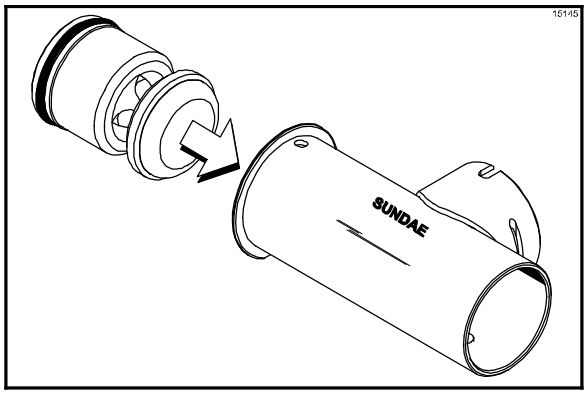

Figure 61

Step 5
Assemble the valve cap. Slide the o-ring into the groove of the valve cap. DO NOT lubricate the o-ring. (See Figure 62.)

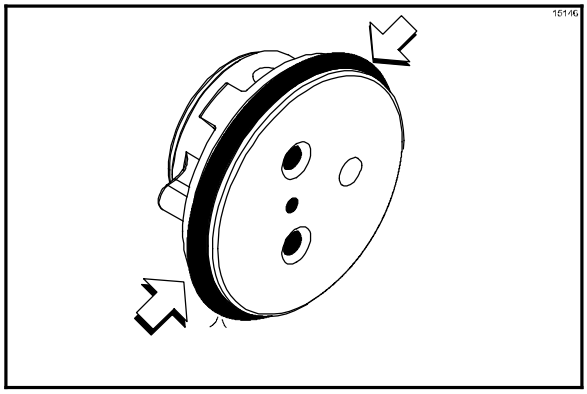

Figure 62

Step 6
Slide the pump valve gasket into the holes on the cap. DO NOT lubricate the gasket. (See Figure 63.)

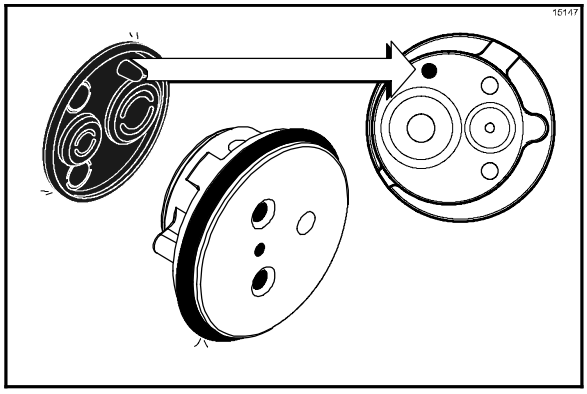

Figure 63

Step 7
Insert the valve body cap into the hole in the mix inlet adapter. (See Figure 64.)

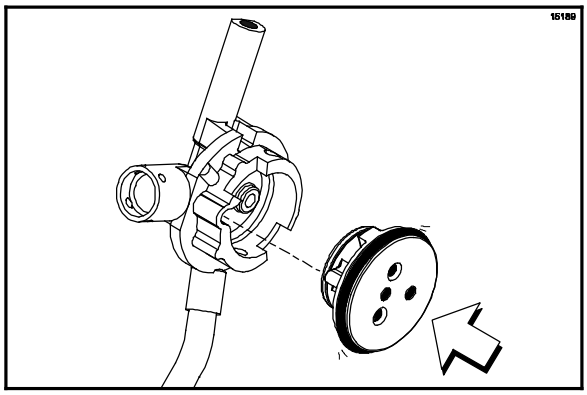

Figure 64

Step 8
Insert the mix inlet assembly into the pump cylinder. (See Figure 65.)

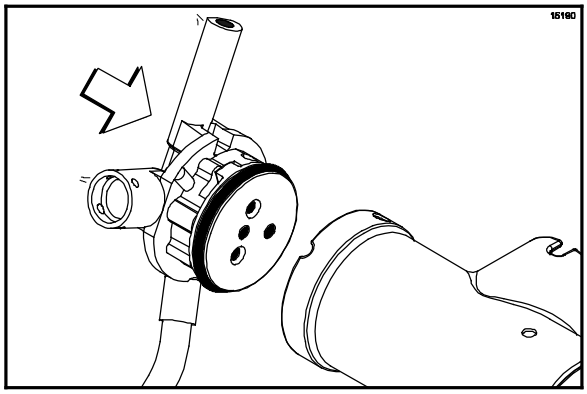

Figure 65

The adapter must be positioned into the notch located at the end of the pump cylinder.

Step 9
Secure the pump parts in position by sliding the retaining pin through the cross holes located at one end of the pump cylinder. (See Figure 66.)

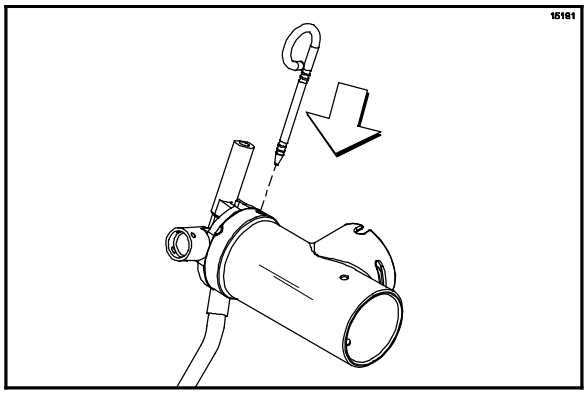

Figure 66

Note: The head of the retaining pin should be located at the top of the pump when installed.

Step 10
Assemble the feed tube assembly. Slide the check ring into the groove of the feed tube.
(See Figure 67.)

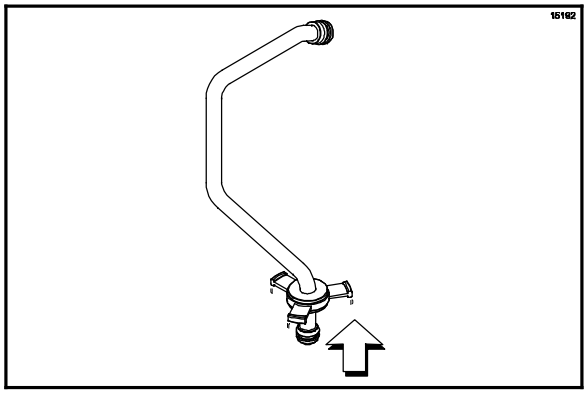

Figure 67

Step 11
Install one red o-ring on each end of the mix feed tube, and thoroughly lubricate. (See Figure 68.)

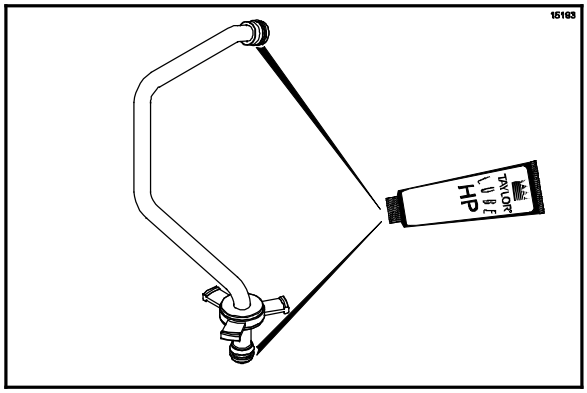

Figure 68

Step 12
Lay the pump assembly, pump clip, cotter pin, mix feed tube, and the agitator in the bottom of the mix hopper for sanitizing.

Step 13
Slide the large black o-ring and the two smaller black o-rings into the grooves on the drive shaft. Thoroughly lubricate the o-rings and shaft. DO NOT lubricate the hex end of the shaft. (See Figure 69.)

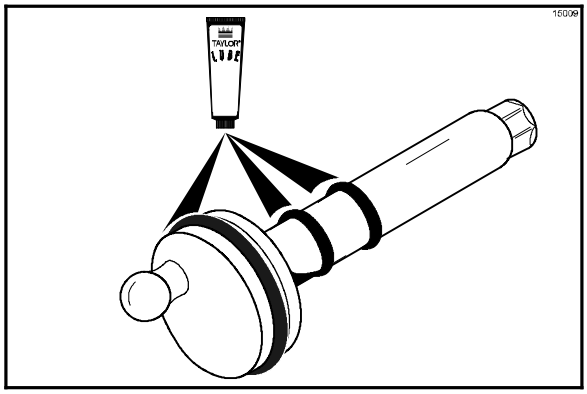

Figure 69

Step 14
Install the hex end of the drive shaft into the drive hub at the rear wall of the mix hopper.
(See Figure 70.)

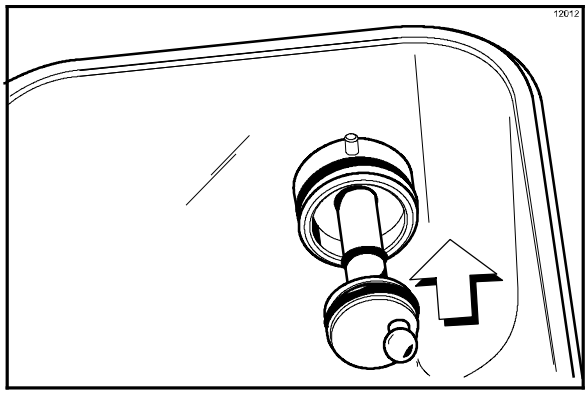

Figure 70

Note: For ease in installing the pump, position the ball crank of the drive shaft in the 3 o'clock position.

Repeat these steps for the other side of the machine.

Sanitizing

Step 1
Prepare a pail of cleaning/sanitizing solution with an active chlorine concentrate of 100 - 200 PPM (parts per million). USE WARM WATER AND FOLLOW THE MANUFACTURER'S SPECIFICATIONS.

Step 2
Pour sanitizing solution over all the parts in the bottom of the mix hopper and allow it to flow into the freezing cylinder. (See Figure 71.)

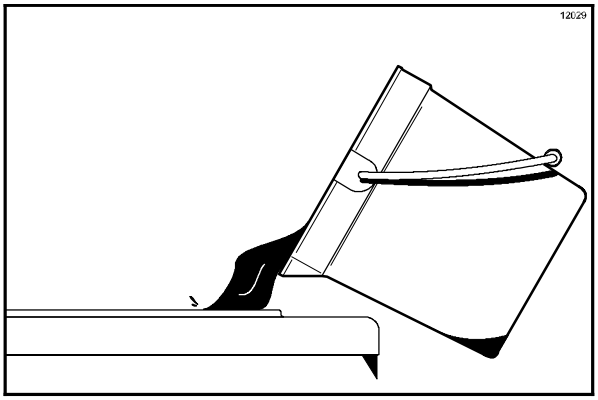

Figure 71

Note: You have just sanitized the mix hopper and parts; therefore, be sure your hands are clean and sanitized before proceeding with these instructions.

Step 3
While the solution is flowing into the freezing cylinder, take particular care to brush-clean the mix level sensing probe, the mix hopper, the mix inlet hole, the air/mix pump, the pump clip, the mix feed tube, the cotter pin, and the agitator.

Step 4
Install the pump assembly at the rear of the mix hopper. To position the pump on the drive hub, align the drive hole in the piston with the drive crank of the drive shaft. Secure the pump in place by slipping the pump clip over the collar of the pump, making sure the clip fits into the grooves in the collar. (See Figure 72.)

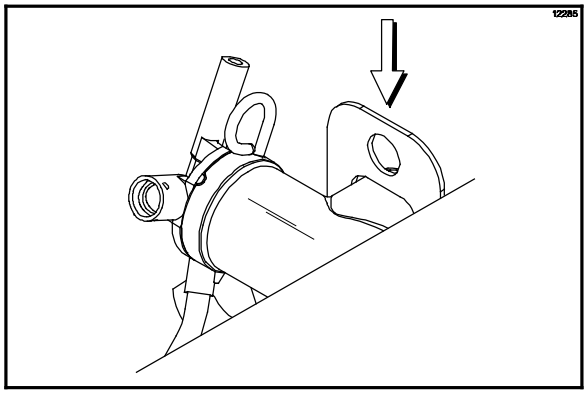

Figure 72

Step 5

Install the pump end of the mix feed tube and secure with the cotter pin. Failure to follow this instruction could result in sanitizer spraying on the operator. (See Figure 73.)

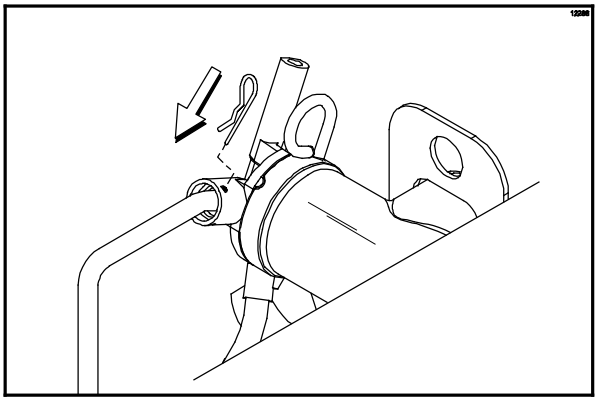

Figure 73

Step 6
Prepare another pail of cleaning/sanitizing solution with an active chlorine concentrate of 100 - 200 PPM. USE WARM WATER AND FOLLOW THE MANUFACTURER'S SPECIFICATIONS.

Step 7
Pour the sanitizing solution into the mix hopper.

Step 8
Brush the exposed sides of the hopper.

Step 9
Place the power switch in the ON position.

Step 10
Touch the WASH symbol . This will cause the sanitizing solution in the freezing cylinder to be agitated. Wait at least 5 minutes before proceeding with these instructions.

Step 11
With an empty pail beneath the door spouts, raise the prime plug and touch the PUMP symbol .

Step 12
When a steady stream of sanitizing solution is flowing from the prime plug opening in the bottom of the freezer door, open the draw valve. Momentarily open the center draw valve to sanitize the center door spout. Draw off the remaining sanitizing solution.

Step 13
Once the sanitizer stops flowing from the door spout, touch the WASH and PUMP symbols and close the draw valve.

Step 14
Place the agitator on the agitator drive shaft housing.

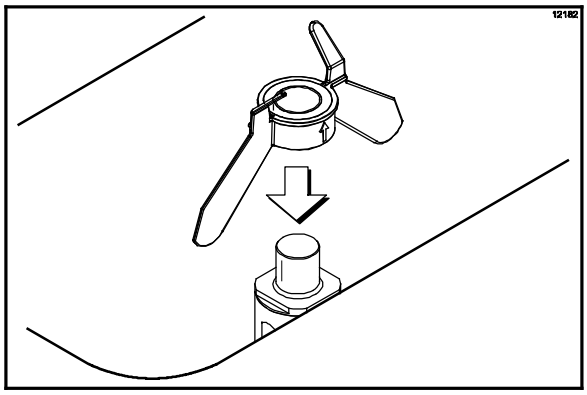

Figure 74

Note: If the agitator should stop turning during normal operation, with **sanitized hands**, remove agitator from agitator drive shaft housing and brush clean with sanitizing solution. Install the agitator back onto the agitator drive shaft housing.

Repeat these steps for the other side of the machine.

Note: Be sure your hands are clean and sanitized before proceeding with these instructions.

Priming

Note: Use only FRESH MIX when priming the freezer.

Step 1
Place an empty mix pail beneath the door spouts. With the prime plug in the UP position, pour 2-1/2 gallons (9.5 liters) of FRESH mix into the mix hopper and allow it to flow into the freezing cylinder.

Step 2
Open the draw valve to remove all sanitizing solution. When only fresh mix is flowing, close the draw valve.

Step 3
Once a steady stream of mix starts to flow from the prime plug opening in the bottom of the freezer door, push the prime plug down.

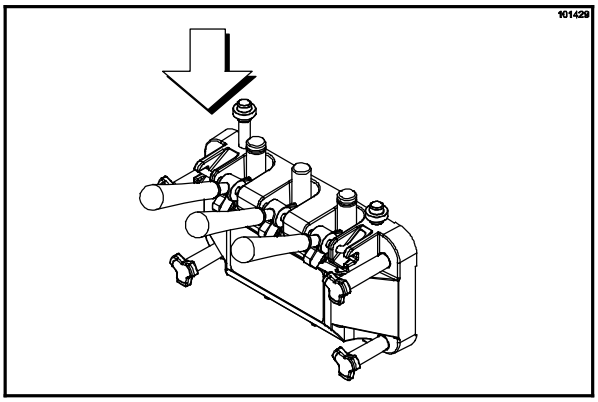

Figure 75

Step 4
When mix stops bubbling down into the freezing cylinder, remove the cotter pin from the outlet fitting of the mix pump. Insert the outlet end of the mix feed tube into the mix inlet hole in the mix hopper. Place the inlet end of the mix feed tube into the outlet fitting of the mix pump. Secure with cotter pin.

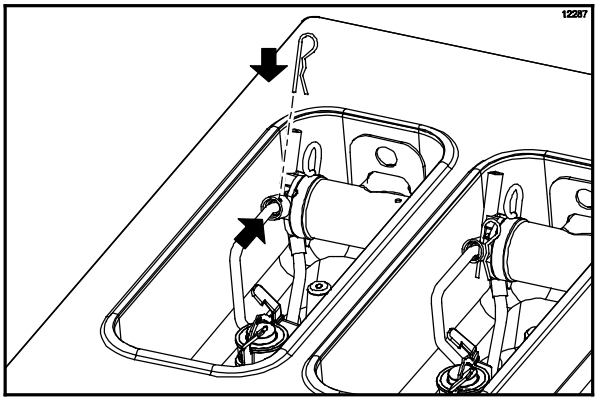

Figure 76

Step 5
Select the AUTO symbol ❄.

Note: The brush clean counter will start at this time.

Step 6
Fill the hopper with fresh mix and place the mix hopper cover in position.

Repeat these steps for the other side of the machine.

Manual Brush Cleaning

This Procedure Must Be Completed Every Day

ALWAYS FOLLOW LOCAL HEALTH CODES.

To disassemble the Model C722, the following items will be needed:

- Two cleaning and sanitizing pails
- Sanitizer/Cleaner
- Necessary brushes (provided with freezer)
- Single service towels

Draining Product From The Freezing Cylinder

Step 1
With a pail beneath the door spouts, open the draw valve. Touch the WASH and PUMP symbols .

IMPORTANT! DO NOT allow the pump to keep running when the draw valve is closed. Excessive pressure will build up causing product to spurt out when the draw valve is opened.

Drain the product from the freezing cylinder and the mix hopper.

Step 2
When the flow of product stops, touch the WASH and PUMP symbols , cancelling the WASH and PUMP modes. Close the draw valve.

Step 3
Remove the agitator, cotter pin, mix feed tube, pump clip and the assembled air/mix pump.

Repeat these steps for the other side of the machine.

Rinsing

Step 1
Pour two gallons (7.6 liters) of cool, clean water into the mix hopper. With the white hopper brush, scrub the mix hopper, the mix level sensing probe, and the outside of the agitator drive shaft housing. Using the double ended brush, brush clean the mix inlet hole. (See Figure 77.)

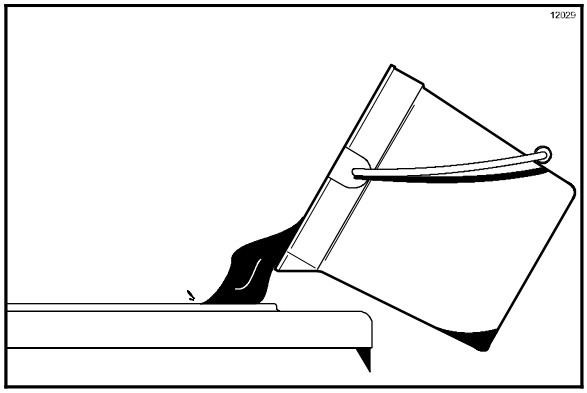

Figure 77

Note: Do not brush clean the mix inlet hole while the machine is in the WASH mode.

Step 2
With a mix pail beneath the door spouts, raise the prime plug and touch the WASH symbol .

Step 3
When a steady stream of rinse water is flowing from the prime plug opening in the bottom of the freezer door, open the draw valve. Drain all the rinse water from the door spout. Close the draw valve and push the prime plug down.

Step 4
Touch the WASH symbol, cancelling the Wash mode.

Step 5
Repeat this procedure using clean, warm water, until the water being discharged is clear.

Repeat these steps for the other side of the machine.

Hopper Cleaning

Step 1
Prepare a pail of cleaning/sanitizing solution with an active chlorine concentrate of 100 - 200 PPM. USE WARM WATER AND FOLLOW THE MANUFACTURER'S SPECIFICATIONS.

Step 2
With the prime plug pushed down, pour the cleaning solution into the hopper. Allow the solution to flow into the freezing cylinder.

Step 3
Using the white hopper brush, clean the mix hopper, the mix level sensing probes, and the outside of the agitator drive shaft housing. Using the double ended brush, clean the mix inlet hole. (**Note:** Do not brush clean the mix inlet hole while the machine is in the Wash mode.)

Step 4
Touch the WASH symbol . This will cause the cleaning solution in the freezing cylinder to come in contact with all areas of the freezing cylinder. Wait at least 5 minutes before proceeding with these instructions.

Step 5
Place an empty pail beneath the door spouts.

Step 6
Raise the prime plug.

Step 7
When a steady stream of cleaning solution is flowing from the prime plug opening in the bottom of the freezer door, open the draw valve. Draw off all the solution.

Step 8
Once the cleaning solution stops flowing from the door spout, close the draw valve and the prime plug.

Step 9
Touch the WASH symbol , cancelling the Wash mode.

Repeat these steps on the other side of the machine.

Disassembly

MAKE SURE THE POWER SWITCH IS IN THE "OFF" POSITION! Failure to follow this instruction may result in severe personal injury from hazardous moving parts.

Step 1
Remove the handscrews, freezer door, beaters, scraper blades, and drive shafts with drive shaft seals from the freezing cylinders.

Step 2
Remove the scraper blade clips from the scraper blades.

Step 3
Remove the drive shaft seal from each drive shaft.

Step 4
From each pump cylinder, remove the retaining pin, mix inlet adaptor, valve cap, pump gasket, and the piston. Remove the o-ring from the piston and valve cap.

Step 5
Remove the freezer door gaskets, front bearings, pivot pin, draw handles, draw valves, prime plugs, and design caps. Remove the o-rings from the draw valves.

Step 6
Remove the pump drive shafts from the drive hubs in the rear wall of the mix hoppers. (See Figure 78.)

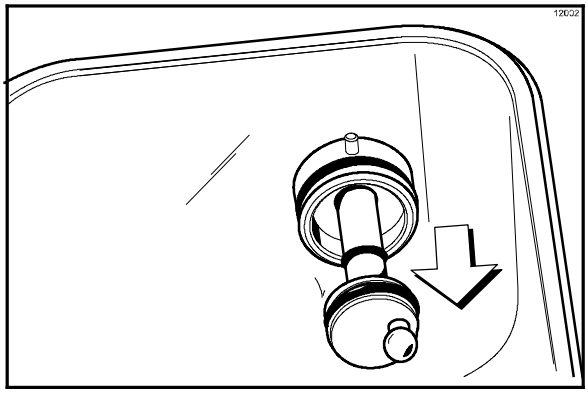

Figure 78

Step 7
Remove the two small o-rings and one large o-ring from each pump drive shaft.

Step 8
Remove the front drip tray and splash shield.

Step 9
Remove all drip pans. Take all parts removed in steps 1 - 9 the sink for cleaning. (See Figure 79.)

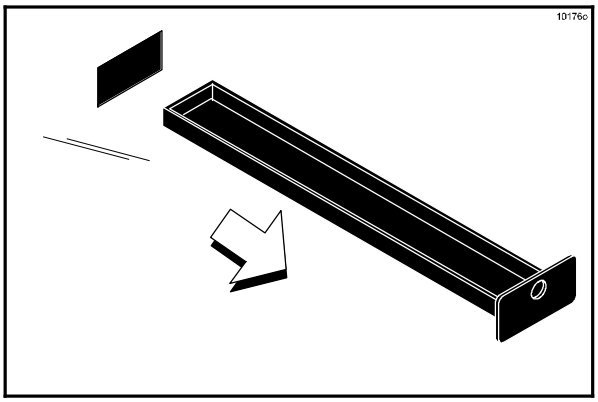

Figure 79

Note: If the drip pans are filled with an excessive amount of mix, it is an indication that the drive shaft seal(s) or o-ring(s) should be replaced or properly lubricated.

Brush Cleaning

Step 1
Prepare a sink with cleaning/sanitizing solution with an active chlorine concentrate of 100 - 200 PPM. USE WARM WATER AND FOLLOW THE MANUFACTURER'S SPECIFICATIONS. Make sure all brushes provided with the freezer are available for brush cleaning.

Step 2
Thoroughly brush clean all disassembled parts in the cleaning solution, making sure all lubricant and mix film is removed. Be sure to brush all surfaces and holes, especially the holes in the pump components and the draw valve holes in the freezer door.

Rinse all parts with clean, warm water. Place the parts on a clean, dry surface to air dry overnight.

Step 3
Return to the freezer with a small amount of cleaning solution. Using the black brush, clean the rear shell bearing at the back of each freezing cylinder. (See Figure 80.)

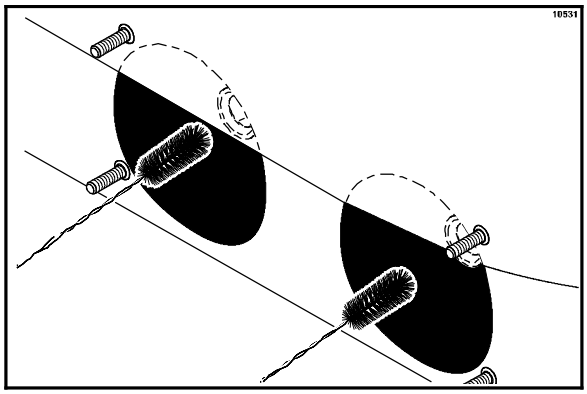

Figure 80

Step 4
Using the black brush, clean the drive hub opening in the rear wall of each mix hopper. (See Figure 81.)

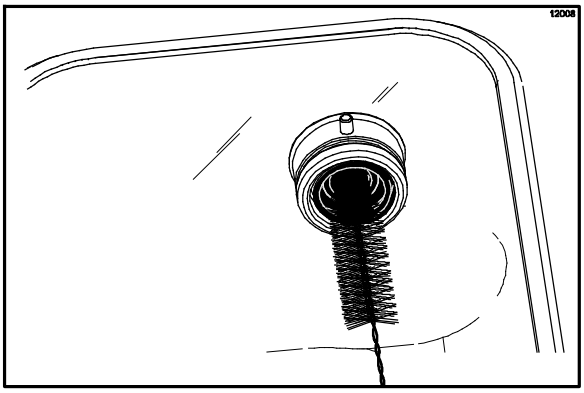

Figure 81

Step 5
Wipe all exterior surfaces of the freezer with a clean, sanitized towel.

Note: The brush clean counter will reset to zero at this time.

Section 7 Important: Operator Checklist

During Cleaning and Sanitizing

ALWAYS FOLLOW LOCAL HEALTH CODES.

Cleaning and sanitizing schedules are governed by federal, state, or local regulatory agencies, and must be followed accordingly. If the unit has a "Standby mode", it must not be used in lieu of proper cleaning and sanitizing procedures and frequencies set forth by the ruling health authority. The following check points should be stressed during the cleaning and sanitizing operations.

CLEANING AND SANITIZING MUST BE PERFORMED DAILY.

Troubleshooting Bacterial Count

☐ 1. Thoroughly clean and sanitize the machine regularly, including complete disassembly and brush cleaning.

☐ 2. Use all brushes supplied for thorough cleaning. The brushes are specially designed to reach all mix passageways.

☐ 3. Use the white bristle brush to clean the mix inlet hole which extends from the mix hopper down to the rear of the freezing cylinder.

☐ 4. Use the black bristle brush to thoroughly clean the rear shell bearing located at the rear of the freezing cylinder and the drive hub opening in the rear wall of the mix hopper. Be sure there is a generous amount of cleaning solution on the brush.

☐ 5. Properly prepare the cleaning and sanitizing solutions. Read and follow the label directions carefully. Too strong of a solution may damage the parts and too weak of a solution will not do an adequate job of cleaning or sanitizing.

☐ 6. The temperature of mix in the mix hopper and walk-in cooler should be below 40°F (4.4°C).

☐ 7. Discard remaining mix from the freezer during "Cleaning Procedures".

Regular Maintenance Checks

☐ 1. Replace scraper blades that are nicked or damaged. Before installing the beater assembly, be certain that scraper blades are properly attached to the helix.

☐ 2. Check the rear shell bearing for signs of wear (excessive mix leakage in rear drip pan) and be certain it is properly cleaned.

☐ 3. Using a screwdriver and cloth towel, keep the rear shell bearing and the female hex drive socket clean and free of lubricant and mix deposits.

☐ 4. Dispose of o-rings and seals if they are worn, torn, or fit too loosely, and replace with new ones.

☐ 5. Follow all lubricating procedures as outlined in "Assembly".

☐ 6. If your machine is air cooled, check the condensers for accumulation of dirt and lint. Dirty condensers will reduce the efficiency and capacity of the machine. Condensers should be cleaned **monthly** with a soft brush. **Never** use screwdrivers or other metal probes to clean between the fins.
Note: For machines equipped with an air filter, it will be necessary to vacuum clean the filters on a monthly schedule.

Caution: Always disconnect electrical power prior to cleaning the condenser. Failure to follow this instruction may result in electrocution.

☐ 7. If your machine is water cooled, check the water lines for kinks or leaks. Kinks can occur when the machine is moved back and forth for cleaning or maintenance purposes. Deteriorated or cracked water lines should be replaced only by an authorized Taylor distributor.

Winter Storage

If the place of business is to be closed during the winter months, it is important to protect the freezer by following certain precautions, particularly if the building is subject to freezing conditions.

Disconnect the freezer from the main power source to prevent possible electrical damage.

On water cooled freezers, disconnect the water supply. Relieve pressure on the spring in the water valve. Use air pressure on the outlet side to blow out any water remaining in the condenser. **This is extremely important.** Failure to follow this procedure may cause severe and costly damage to the refrigeration system.

Your local Taylor Distributor can perform this winter storage service for you.

Wrap detachable parts of the freezer such as beater, blades, drive shaft, and freezer door, and place them in a protected dry place. Rubber trim parts and gaskets can be protected by wrapping them with moisture-proof paper. All parts should be thoroughly cleaned of dried mix or lubrication which attract mice and other vermin.

It is recommended that an authorized service technician perform winter storage draining, to insure all water has been removed. This will guard against freezing and rupturing of the components.

PROBLEM	PROBABLE CAUSE	REMEDY	PAGE REF.
1. No product is being dispensed.	a. Low on mix. The MIX OUT light is on.	a. Add mix to mix hopper. Return to AUTO mode.	34
	b. Power switch is in the OFF position.	b. Turn power switch ON and select AUTO.	33
	c. Machine not in AUTO mode.	c. Select AUTO and allow machine to cycle off before drawing product.	34
	d. Beater motor is out on reset. The BEATER OVERLOAD message displayed.	d. Turn machine off. Press the reset button. Restart the machine in AUTO.	- - -
	e. Pump motor control is out on internal overload.	e. Turn power switch off. Remove and clean mix pump. Allow at least two minutes for power switch to remain off for control to reset. Once power is restored, before installing pump, press pump key and verify the pump shaft rotates counter-clockwise. **Note:** If this does not correct the problem or if rotation is clockwise, call an authorized service technician.	- - -
	f. Feed tube or check ring not properly installed.	f. Make sure feed tube and rubber check ring are properly installed.	31, 34
	g. Butterfat buildup in the pump.	g. Carefully remove the mix pump, clean and reinstall.	36
	h. Freeze-up in mix inlet hole.	h. Call an authorized service technician.	- - -
	i. The mix pump ball crank is broken.	i. Call an authorized service technician.	- - -
2. No control panel functions (power switch is ON).	a. Machine is unplugged.	a. Plug into wall receptacle.	- - -
	b. Circuit breaker OFF or blown fuse.	b. Turn the breaker ON or replace the fuse.	- - -

121004

PROBLEM	PROBABLE CAUSE	REMEDY	PAGE REF.
3. The product is too soft.	a. Draw rate is set too fast.	a. Adjust draw rate: 5 to 7-1/2 oz. (142 g. to 213 g.) of product by weight in 10 seconds.	29
4. The product is too thick.	a. Freezing cylinder not primed correctly.	a. Drain the freezing cylinder and reprime the machine.	34
	b. Air/mix pump incorrectly assembled.	b. Assemble and lubricate according to instructions in this manual.	30
	c. The viscosity control is set too cold.	c. Call an authorized service technician.	- - -
	d. Freeze-up in mix inlet hole.	d. Call an authorized service technician.	- - -
5. The mix in the hopper is too warm.	a. Hopper cover is not in position.	a. Clean and sanitize hopper cover and place in position.	34
	b. Agitator is not installed.	b. Clean, sanitize, and install the agitator.	33
	c. The hopper temperature is out of adjustment.	c. Call an authorized service technician.	- - -
6. The mix in the hopper is too cold.	a. The hopper temperature is out of adjustment.	a. Call an authorized service technician.	- - -
7. Mix Low and Mix Out probes are not functioning.	a. Milkstone build-up in the hopper.	a. Clean hoppers thoroughly.	37
8. The mix pump will not operate.	a. Pump motor control is out on internal overload.	a. Turn power switch off. Remove and clean mix pump. Allow at least two minutes for power switch to remain off, for control to reset. Once power is restored, before installing pump, press pump key and verify pump shaft rotates counter-clockwise. **Note:** If rotation is clockwise, call authorized service technician.	- - -
9. Product is collecting on top of the freezer door.	a. The top o-ring on draw valve is improperly lubricated or is worn.	a. Lubricate properly or replace the o-ring.	28

PROBLEM	PROBABLE CAUSE	REMEDY	PAGE REF.
10. Excessive mix leakage from the bottom of door spout.	a. Bottom o-ring on draw valve is improperly lubricated or is worn.	a. Lubricate properly or replace the o-ring.	28
11. Excessive mix leakage into the drip pan.	a. The seal on drive shaft is improperly lubricated or is worn.	a. Lubricate properly or replace the seal.	25
	b. The seal is installed inside-out on the drive shaft.	b. Install correctly.	25
	c. Inadequate lubrication of the drive shaft.	c. Lubricate properly.	25
	d. The drive shaft and beater assembly work forward.	d. Call an authorized service technician.	- - -
	e. Worn rear shell bearing.	e. Call an authorized service technician.	- - -
	f. Gear box out of alignment.	f. Call an authorized service technician.	- - -
12. The drive shaft is stuck in the drive coupling.	a. Mix and lubricant collected in drive coupling.	a. Brush clean the rear shell bearing area regularly.	37
	b. Rounded corners of drive shaft, drive coupling, or both.	b. Call an authorized service technician.	- - -
	c. Gear box is out of alignment.	c. Call an authorized service technician.	- - -
13. The freezing cylinder walls are scored.	a. Missing or worn front bearing.	a. Install or replace the front bearing.	27
	b. Broken freezer door baffle rod.	b. Replace freezer door.	- - -
	c. Broken beater pins.	c. Replace beater assembly.	26
	d. Beater assembly is bent.	d. Replace beater assembly.	- - -
	e. Gear box is out of alignment.	e. Call an authorized service technician.	- - -

PROBLEM	PROBABLE CAUSE	REMEDY	PAGE REF.
14. The product makes a popping sound when drawn.	a. Draw rate is set too fast.	a. Adjust draw rate: 5 to 7-1/2 oz. (142 g. to 213 g.) of product by weight in 10 seconds.	29
	b. Pump assembled incorrectly.	b. Assemble and lubricate according to instructions in this manual.	30
	c. Freezing cylinder not primed correctly.	c. Drain the freezing cylinder and reprime the machine.	34

Section 9 Parts Replacement Schedule

PART DESCRIPTION	EVERY 3 MONTHS	EVERY 6 MONTHS	ANNUALLY
Scraper Blade	X		
Drive Shaft Seal	X		
Freezer Door Gasket	X		
Front Bearing	X		
Front Beater Shoes	X		
Design Caps	X		
Draw Valve O-Ring	X		
Mix Feed Tube O-Ring	X		
Pump O-Ring	X		
Prime Plug O-Ring	X		
Pump Valve Gasket	X		
Mix Feed Tube Check Ring	X		
Pump Drive Shaft O-Ring	X		
White Bristle Brush, 3” x 7”		Inspect & Replace if Necessary	Minimum
White Bristle Brush, 1” x 2”		Inspect & Replace if Necessary	Minimum
Black Bristle Brush, 1” x 2”		Inspect & Replace if Necessary	Minimum
Double-Ended Brush		Inspect & Replace if Necessary	Minimum

Section 10 Limited Warranty on Equipment

TAYLOR COMPANY LIMITED WARRANTY ON FREEZERS

Taylor Company, a division of Carrier Commercial Refrigeration, Inc. (“Taylor”) is pleased to provide this limited warranty on new Taylor-branded freezer equipment available from Taylor to the market generally (the “Product”) to the original purchaser only.

LIMITED WARRANTY

Taylor warrants the Product against failure due to defect in materials or workmanship under normal use and service as follows. All warranty periods begin on the date of original Product installation. If a part fails due to defect during the applicable warranty period, Taylor, through an authorized Taylor distributor or service agency, will provide a new or re-manufactured part, at Taylor’s option, to replace the failed defective part at no charge for the part. Except as otherwise stated herein, these are Taylor’s exclusive obligations under this limited warranty for a Product failure. This limited warranty is subject to all provisions, conditions, limitations and exclusions listed below and on the reverse (if any) of this document.

Product	Part	Limited Warranty Period
Soft Serve	Insulated shell assembly	Five (5) years
Frozen Yogurt **Shakes**	Refrigeration compressor (except service valve)	Five (5) years
Smoothies	Beater motors	Two (2) years
Frozen Beverage	Beater drive gear	Two (2) years
Batch Desserts	Printed circuit boards and Softech controls beginning with serial number H8024200	Two (2) years
	Parts not otherwise listed in this table or excluded below	One (1) year

LIMITED WARRANTY CONDITIONS

1. If the date of original installation of the Product cannot be verified, then the limited warranty period begins ninety (90) days from the date of Product manufacture (as indicated by the Product serial number). Proof of purchase may be required at time of service.
2. This limited warranty is valid only if the Product is installed and all required service work on the Product is performed by an authorized Taylor distributor or service agency, and only if genuine, new Taylor parts are used.
3. Installation, use, care, and maintenance must be normal and in accordance with all instructions contained in the Taylor Operator’s Manual.
4. Defective parts must be returned to the authorized Taylor distributor or service agency for credit.
5. The use of any refrigerant other than that specified on the Product’s data label will void this limited warranty.

LIMITED WARRANTY EXCEPTIONS

This limited warranty does **not** cover:

1. Labor or other costs incurred for diagnosing, repairing, removing, installing, shipping, servicing or handling of defective parts, replacement parts, or new Products.
2. Normal maintenance, cleaning and lubrication as outlined in the Taylor Operator’s Manual, including cleaning of condensers.

3. Replacement of wear items designated as Class “000” parts in the Taylor Operator’s Manual.
4. External hoses, electrical power supplies, and machine grounding.
5. Parts not supplied or designated by Taylor, or damages resulting from their use.
6. Return trips or waiting time required because a service technician is prevented from beginning warranty service work promptly upon arrival.
7. Failure, damage or repairs due to faulty installation, misapplication, abuse, no or improper servicing, unauthorized alteration or improper operation or use as indicated in the Taylor Operator’s Manual, including but not limited to the failure to use proper assembly and cleaning techniques, tools, or approved cleaning supplies.
8. Failure, damage or repairs due to theft, vandalism, wind, rain, flood, high water, water, lightning, earthquake or any other natural disaster, fire, corrosive environments, insect or rodent infestation, or other casualty, accident or condition beyond the reasonable control of Taylor; operation above or below the electrical or water supply specification of the Product; or components repaired or altered in any way so as, in the judgment of the Manufacturer, to adversely affect performance, or normal wear or deterioration.
9. Any Product purchased over the Internet.
10. Failure to start due to voltage conditions, blown fuses, open circuit breakers, or damages due to the inadequacy or interruption of electrical service.
11. Electricity or fuel costs, or increases in electricity or fuel costs from any reason whatsoever.
12. Damages resulting from the use of any refrigerant other than that specified on the Product’s data label will void this limited warranty.
13. Any cost to replace, refill or dispose of refrigerant, including the cost of refrigerant.
14. **ANY SPECIAL, INDIRECT OR CONSEQUENTIAL PROPERTY OR COMMERCIAL DAMAGE OF ANY NATURE WHATSOEVER.** Some jurisdictions do not allow the exclusion of incidental or consequential damages, so this limitation may not apply to you.

This limited warranty gives you specific legal rights, and you may also have other rights which vary from jurisdiction to jurisdiction.

LIMITATION OF WARRANTY

THIS LIMITED WARRANTY IS EXCLUSIVE AND IS IN LIEU OF ALL OTHER WARRANTIES, CONDITIONS AND/OR REMEDIES UNDER THE LAW, INCLUDING ANY IMPLIED WARRANTIES OR CONDITIONS OF MERCHANTABILITY OR FITNESS FOR A PARTICULAR PURPOSE. THE ORIGINAL OWNER'S SOLE REMEDY WITH RESPECT TO ANY PRODUCTS SHALL BE REPAIR OR REPLACEMENT OF DEFECTIVE COMPONENTS UNDER THE TERMS OF THIS LIMITED WARRANTY. ALL RIGHTS TO CONSEQUENTIAL OR INCIDENTAL DAMAGES (INCLUDING CLAIMS FOR LOST SALES, LOST PROFITS, PRODUCT LOSS, PROPERTY DAMAGES OR SERVICE EXPENSES) ARE EXPRESSLY EXCLUDED. THE EXPRESS WARRANTIES MADE IN THIS LIMITED WARRANTY MAY NOT BE ALTERED, ENLARGED, OR CHANGED BY ANY DISTRIBUTOR, DEALER, OR OTHER PERSON, WHATSOEVER.

LEGAL REMEDIES

The owner **must** notify Taylor in writing, by certified or registered letter to the following address, of any defect or complaint with the Product, stating the defect or complaint and a specific request for repair, replacement, or other correction of the Product under warranty, mailed at least thirty (30) days before pursuing any legal rights or remedies.

Taylor Company
a division of Carrier Commercial Refrigeration, Inc.
750 N. Blackhawk Blvd.
Rockton, IL 61072

131121

Section 11 Limited Warranty on Parts

TAYLOR COMPANY LIMITED WARRANTY ON TAYLOR GENUINE PARTS

Taylor Company, a division of Carrier Commercial Refrigeration, Inc. (“Taylor”) is pleased to provide this limited warranty on new Taylor genuine replacement components and parts available from Taylor to the market generally (the “Parts”) to the original purchaser only.

LIMITED WARRANTY

Taylor warrants the Parts against failure due to defect in materials or workmanship under normal use and service as follows. All warranty periods begin on the date of original installation of the Part in the Taylor unit. If a Part fails due to defect during the applicable warranty period, Taylor, through an authorized Taylor distributor or service agency, will provide a new or re-manufactured Part, at Taylor’s option, to replace the failed defective Part at no charge for the Part. Except as otherwise stated herein, these are Taylor’s exclusive obligations under this limited warranty for a Part failure. This limited warranty is subject to all provisions, conditions, limitations and exclusions listed below and on the reverse (if any) of this document.

Part's Warranty Class Code or Part	Limited Warranty Period
Class 103 Parts[1]	Three (3) months
Class 212 Parts[2]	Twelve (12) months
Class 512 Parts	Twelve (12) months
Class 000 Parts	No warranty
Taylor Part #072454 (Motor-24VDC *C832/C842*)	Four (4) years

LIMITED WARRANTY CONDITIONS

1. If the date of original installation of the Part cannot be otherwise verified, proof of purchase may be required at time of service.
2. This limited warranty is valid only if the Part is installed and all required service work in connection with the Part is performed by an authorized Taylor distributor or service agency.
3. The limited warranty applies only to Parts remaining in use by their original owner at their original installation location in the unit of original installation.
4. Installation, use, care, and maintenance must be normal and in accordance with all instructions contained in the Taylor Operator’s Manual.
5. Defective Parts must be returned to the authorized Taylor distributor or service agency for credit.
6. This warranty is not intended to shorten the length of any warranty coverage provided pursuant to a separate Taylor Limited Warranty on freezer or grill equipment.
7. The use of any refrigerant other than that specified for the unit in which the Part is installed will void this limited warranty.

[1, 2] Except that Taylor Part #032129SER2 (Compressor-Air-230V SERV) and Taylor Part #075506SER1 (Compressor-Air-115V 60HZ) shall have a limited warranty period of twelve (12) months when used in Taylor freezer equipment and a limited warranty period of two (2) years when used in Taylor grill equipment.

LIMITED WARRANTY EXCEPTIONS

This limited warranty does **not** cover:

1. Labor or other costs incurred for diagnosing, repairing, removing, installing, shipping, servicing or handling of defective Parts, replacement Parts, or new Parts.
2. Normal maintenance, cleaning and lubrication as outlined in the Taylor Operator's Manual, including cleaning of condensers or carbon and grease buildup.
3. Required service, whether cleaning or general repairs, to return the cooking surface assemblies, including the upper platen and lower plate, to an operational condition to achieve proper cooking or allow proper assembly of release sheets and clips as a result of grease build-up on the cooking surfaces, including but not limited to the platen and plate, sides of the shroud or top of the shroud.
4. Replacement of cooking surfaces, including the upper platen and lower plate, due to pitting or corrosion (or in the case of the upper platen, due to loss of plating) as a result of damage due to the impact of spatulas or other small wares used during the cooking process or as a result of the use of cleaners, cleaning materials or cleaning processes not approved for use by Taylor.
5. Replacement of wear items designated as Class "000" Parts in the Taylor Operator's Manual, as well as any release sheets and clips for the Product's upper platen assembly.
6. External hoses, electrical power supplies, and machine grounding.
7. Parts not supplied or designated by Taylor, or damages resulting from their use.
8. Return trips or waiting time required because a service technician is prevented from beginning warranty service work promptly upon arrival.
9. Failure, damage or repairs due to faulty installation, misapplication, abuse, no or improper servicing, unauthorized alteration or improper operation or use as indicated in the Taylor Operator's Manual, including but not limited to the failure to use proper assembly and cleaning techniques, tools, or approved cleaning supplies.
10. Failure, damage or repairs due to theft, vandalism, wind, rain, flood, high water, water, lightning, earthquake or any other natural disaster, fire, corrosive environments, insect or rodent infestation, or other casualty, accident or condition beyond the reasonable control of Taylor; operation above or below the gas, electrical or water supply specification of the unit in which a part is installed; or Parts or the units in which they are installed repaired or altered in any way so as, in the judgment of Taylor, to adversely affect performance, or normal wear or deterioration.
11. Any Part purchased over the Internet.
12. Failure to start due to voltage conditions, blown fuses, open circuit breakers, or damages due to the inadequacy or interruption of electrical service.
13. Electricity, gas or other fuel costs, or increases in electricity or fuel costs from any reason whatsoever.
14. Damages resulting from the use of any refrigerant other than that specified for the unit in which the Part is installed will void this limited warranty.
15. Any cost to replace, refill or dispose of refrigerant, including the cost of refrigerant.
16. **ANY SPECIAL, INDIRECT OR CONSEQUENTIAL PROPERTY OR COMMERCIAL DAMAGE OF ANY NATURE WHATSOEVER.** Some jurisdictions do not allow the exclusion of incidental or consequential damages, so this limitation may not apply to you.

This limited warranty gives you specific legal rights, and you may also have other rights which vary from jurisdiction to jurisdiction.

131121

LIMITATION OF WARRANTY

THIS LIMITED WARRANTY IS EXCLUSIVE AND IS IN LIEU OF ALL OTHER WARRANTIES, CONDITIONS AND/OR REMEDIES UNDER THE LAW, INCLUDING ANY IMPLIED WARRANTIES OR CONDITIONS OF MERCHANTABILITY OR FITNESS FOR A PARTICULAR PURPOSE. THE ORIGINAL OWNER'S SOLE REMEDY WITH RESPECT TO ANY PRODUCTS SHALL BE REPAIR OR REPLACEMENT OF DEFECTIVE PARTS UNDER THE TERMS OF THIS LIMITED WARRANTY. ALL RIGHTS TO CONSEQUENTIAL OR INCIDENTAL DAMAGES (INCLUDING CLAIMS FOR LOST SALES, LOST PROFITS, PRODUCT LOSS, PROPERTY DAMAGES OR SERVICE EXPENSES) ARE EXPRESSLY EXCLUDED. THE EXPRESS WARRANTIES MADE IN THIS LIMITED WARRANTY MAY NOT BE ALTERED, ENLARGED, OR CHANGED BY ANY DISTRIBUTOR, DEALER, OR OTHER PERSON, WHATSOEVER.

LEGAL REMEDIES

The owner **must** notify Taylor in writing, by certified or registered letter to the following address, of any defect or complaint with the Part, stating the defect or complaint and a specific request for repair, replacement, or other correction of the Part under warranty, mailed at least thirty (30) days before pursuing any legal rights or remedies.

Taylor Company
a division of Carrier Commercial Refrigeration, Inc.
750 N. Blackhawk Blvd.
Rockton, IL 61072

C72227FWBE - 208-230V 60HZ 1PH & 208-230V 60HZ 3PH - A/C-BRISTOL-(R404A) - ROHS COMPLIANT

DESCRIPTION	PART NUMBER	QTY.	WARR. CLASS	REMARKS
ACCUMULATOR-COPPER 2"DIA 10"LG	047062	1	103	
ACTUATOR A.-DRAW SWITCH *	X69835	1	103	
ARM-DRAW SWITCH-LEFT	069166	1	103	
ARM-DRAW SWITCH-RIGHT	069167	1	103	
BRACKET A.-SPRING-RETURN	X69481	1	103	
BRACKET A.-SWITCH *C71X*	X69836	1	103	
E-RING 1/4 BLACK PHOS	032190	3	000	
PIN-PIVOT-DRAW SWITCH	038484	1	103	
ROD-SPRING RETAINER	038254-SP	1	103	
SCREW-ADJUSTMENT-DRAW PADDLE	069374	2	000	
SPRING-EXTENSION.467X.062X1.	069392	2	103	
SPRING-RETURN-LEFT-TWIN TWIS	038923	1	103	
SPRING-RETURN-RIGHT-TWIN TWI	038924	1	103	
ADAPTOR A.-MIX INLET-SS	X80250	2	103	REPLACED 069921 1/25/2012
ADAPTOR-MIX INLET-SS-RED*C72	069921	2	103	PUMP
BEARING FRONT				SEE KIT A.-SHOE X50350
BEARING-REAR SHELL-NICKEL	031324	2	000	
+GUIDE-DRIP SEAL	028992	2	000	
+NUT-BEARING	028991	2	000	
+WASHER-BEARING LOCK	012864	2	000	
BEATER A.-2.8QT-1 PIN-SUP	X80291	2	103	
+BLADE-SCRAPER-PLASTIC 6-5	080292	4	000	INSTRUCTION-PLASTIC BLADE 046349
+CLIP-SCRAPER BLADE 5.50 I	080293	4	103	
BELT-AX35	022848	4	000	
BLOCK-TERMINAL 2P L1,L2	039422	1	103	208-230V 60HZ 1PH
BLOCK-TERMINAL 3P L1,L2,L	039423	1	103	203-230V 60HZ 3PH
BLOCK-TERMINAL-PLUG 4P .2 SIP	040322-001	2	103	
BLOCK-TERMINAL-PLUG 7P .2 SI	040322-003	3	103	
BLOCK-TERMINAL-PLUG 10P .2 S	040322-005	2	103	
BLOCK-TERMINAL-PLUG 2P .2 SI	040322-009	2	103	

DESCRIPTION	PART NUMBER	QTY.	WARR. CLASS	REMARKS
BLOCK-TERMINAL 2P .25 SPADE	051644	1	103	
BRACKET-ACCESS VALVES	068843	1	103	
BRACKET-DRIP TRAY-FR	068857	1	103	
BRACKET-RECEIVER MOUNT	052990	1	103	
BRACKET-VALVE-DANF-LWR	069197	1	103	
BRACKET-VALVE-DANF-UPR	080241	1	103	
BRUSH-REAR BRG 1"D X 2"LG X 14	013071	1	000	
BRUSH-DBL END-PUMP & FEED TUBE	013072	1	000	
BRUSH-DRAW VALVE 1"OD X 2"X17"	013073	1	000	
BRUSH-MIX PUMP BODY-3" X 7" WH	023316	1	000	
BUSHING-PANEL	013289	2	103	
BUSHING-SNAP 11/16 ID X 7/8OD	010548	3	103	
BUSHING-SNAP 15/16 ID X 1-3/32	023396	4	103	
BUSHING-SNAP 1-5/8ID X 2 OD	043637	4	103	
BUSHING-SPLIT 43/64ID X 7/8OD	027691	1	103	MAIN COMP
CABLE-CONTROL/INTERFACE	069023	1	103	
CABLE-RIBBON-14C-3"L-SIL/SIL	056864	1	103	DEC PLATE
CABLE-RIBBON-50C-20"L-DIL/DIL	040040-011	1	103	
CABLE-RIBBON-20C-17"L-DIL/DILR	040040-013	1	103	
CABLE-RIBBON-50C-25"L.DIL/DIL	040040-025	1	103	
CABLE-RIBBON-20C-14"L-DIL/DIL	040040-040	1	103	
CABLE-RIBBON-20C-16"L-DIL/DIL	040040-049	1	103	
CAP-DESIGN 1.010"ID-6 POINT	014218	3	000	
CAP-VALVE BODY SS	056874-14	2	103	PUMP
CAP-VALVE BODY SS	056874-12	2	103	
CAP-VALVE BODY SS	056874-16	2	103	
CAPACITOR-RUN 15UF/440V	062009	2	103	
CAPACITOR-RUN 25UF/440V	037431	1	103	MAIN COMP
CAPACITOR-RUN 4.0UF/400V	500311	1	103	
CAPACITOR-START 189-227UF/330V	033044-1	1	103	
CAPACITOR-START 60UF-220/275V	047703	1	103	

DESCRIPTION	PART NUMBER	QTY.	WARR. CLASS	REMARKS
CAPACITOR-START 88-106UF/330V	062007	2	103	
CARD-ASSY SIMPLIFIED PUMP	057031	1	000	
CARD-CHECKOUT WARRANTY	033941-W5	1	000	
CLIP-RETAINER-MIX PUMP	044641	2	103	
CLIP-SCRAPER BLADE 5.50 INCH	080293	4	103	
COMPRESSOR L64A113BBCA	048259-27E	1	512	208-230V 60HZ 1PH
+CAPACITOR-RUN 25UF/440V	037431	1	103	
+CAPACITOR-START 189-227UF/330V	033044-1	1	103	
+RELAY-START-COMPRESSOR	062363	1	103	
+SCREW-5/16-18X1-1/2 HEX HEAD	001894	4	000	
+GROMMET-COMPRESSOR MOUNTING	037428	4	000	
+SLEEVE-MOUNTING-COMP.	039924	4	000	
COMPRESSOR L63A113DBLA	048259-33	1	512	208-230V 60HZ 3PH
+SCREW-5/16-18X1-1/2 HEX HEAD	001894	4	000	
+GROMMET-COMPRESSOR MOUNTING	037428	4	000	
+SLEEVE-MOUNTING-COMP.	039924	4	000	
COMPRESSOR TL3G-R134A	047701-27	1	512	DANFOSS/AUX
+CAPACITOR-START 60UF-220/275V	047703	1	103	
+COVER-TERMINAL-COMPRESSOR	047739	1	103	
+DRYER-CAP. TUBE .026ID X 13FT	047699	1	000	
+KIT-MOUNTING-COMPRESSOR	047704	1	000	
+RELAY-START-COMPRESSOR-TL3G	047702-27	1	103	
+SHROUD-DANFOSS	068883	1	103	
CONDENSER-AC 16X16 3ROW 14FPI	056944	1	103	FAN MOTOR 208-230V 60HZ 1PH
CONDENSER-AC 7X6X1.25-2 ROW	027155	1	103	DANFOSS/AUX
CONTROL-MOTOR BISON	068568-05	2	103	
COVER A.-WIRE-FAN *C708*	X57287	1	103	
COVER-HOPPER-14 QT-BLACK	041682-BLA	2	103	
CYLINDER-PUMP HOPPER SOFTSER	069920	2	103	
DECAL-DOOR-3 SPOUT-TWIN TWIST	062239	1	000	
DECAL-INST-CLN-PMP HPR	042170	1	000	

DESCRIPTION	PART NUMBER	QTY.	WARR. CLASS	REMARKS
DECAL-TROUBLESHOOT	038374	1	000	
DIAGRAM-WIRING *C722*	080525-27	1	000	208-230V 60HZ 1PH
DIAGRAM-WIRING *C722*	080525-33	1	000	208-230V 60HZ 3PH
DOOR A.-*SH BAF*W/PRG	X80157-SER	1	103	
BAFFLE A.-SHORT 4 IN W/RAD T	X50883	2	103	
DECAL-DOOR-3 SPOUT-TWIN TWIS	062239	1	000	
+KIT A.-BEATER FRONT SHOES	X50350	1	000	
+GASKET-DOOR HT 4"-DOUBLE	048926	2	000	
+HANDLE A.-DRAW	X56421-1	3	103	
+O-RING-1/2OD X .070W	024278	4	000	
+O-RING-1/4 OD X .070W 50 DUR	015872	3	000	
+O-RING-7/8 OD X .103W	014402	5	000	
+PIN-HANDLE-TWIN	059894	1	103	
+PLUG-PRIME TWIN	059936	2	103	
+SCREW-ADJUSTMENT-5/16-24	056332	3	103	
+SEAL-DRAW VALVE *LARGE H-RIN	034698	1	000	
+VALVE A.-DRAW	X59843	2	103	
+VALVE A.-DRAW-CENTER	X62218	1	103	
DRYER-FILTER-HP62-3/8 X 1/4S	048901	1	000	
DRYER-CAP. TUBE .026ID X 13FT	047699	1	000	AUX COND
ENCLOSURE-CONTROL	080152	1	103	
ENCLOSURE-POWER SUPPLY	080149	1	103	
FASTENER-CLIP 1/4-20 U-TYPE	045865	14	000	
FASTENER-DOOR LATCH	030787	2	000	LOWER PANEL
FASTENER-DOOR STRIKE	030788	2	000	LOWER PANEL
FILTER-AIR-21.688X15.813HX.70W	052779-9	1	000	
FILTER-CORCOM 6EH1	040140-001	1	103	UPPER CONTROL
FUSE-BUSS-ABC-8-R ROHS COMPL	080607	2	000	HARNESS-WIRE-CAP&RELAY
FUSE-BUSS-ABC-15-R ROHS COMPL	076414	2	000	REPLACES 045293 FUSE & 045606 HOLDER
+HOLDER-FUSE-INLINE-TYPE HFA-R	064538	1	000	
FORM-QUALITY REPORT BY FAX	065712	1	000	

DESCRIPTION	PART NUMBER	QTY.	WARR. CLASS	REMARKS
GASKET-BASE PAN *C723*	068776	1	000	
+SCREW-10X7/16 UNSL TD HWH	066234	12	000	PAN GASKET
GASKET-DOOR HT 4"-DOUBLE	048926	2	000	
GASKET-SIMPLIFIED PUMP VALVE	053527	2	000	
GEAR A.*REDUCER 4.21:1 SERVICE	021286-SER	2	212	
+SCREW-5/16-18X3-1/4 HEX HEAD	022678	8	000	GEAR
GUARD-POWER SWITCH	034830	1	103	
GUARD-FAN	028534-1	1	103	
GUIDE A.-DRIP PAN	X51567	1	103	
GUIDE A.-DRIP PAN-MIX PUMP	X80225	2	103	
GUIDE-DRIP PAN	068932	2	103	
GUIDE-FILTER-LEFT	056941	1	103	208-230V 60HZ 1PH
GUIDE-FILTER-RIGHT	056943	1	103	
HARNESS-WIRE-BTR MTR L	068915-27L	1	103	208-230V 60HZ 1PH
HARNESS-WIRE-BTR MTR R	068915-27R	1	103	208-230V 60HZ 1PH
HARNESS-WIRE-BTR MTR *C72	068915-33L	1	103	208-230V 60HZ 3PH
HARNESS-WIRE-BTR MTR *C72	068915-33R	1	103	208-230V 60HZ 3PH
HARNESS-WIRE-CAP/RELAY BOX	069079-27	1	103	208-230V 60HZ 1PH
HARNESS-WIRE-CAP&RELAY *C	080597	1	103	FUSE 080607
HARNESS-WIRE-COMP *C723*	069079-33G	1	103	203-230V 60HZ 3PH
HARNESS-WIRE-CNTRL	068874	1	103	UPPER CONTROL
HARNESS-WIRE-LW V-CNTL	068917	1	103	
HARNESS-WIRE-MAIN POWER	069083-27G	1	103	208-230V 60HZ 1PH
HARNESS-WIRE-MAIN POWER *	069083-33G	1	103	208-230V 60HZ 3PH
HARNESS-WIRE-MIX LVL *C72	068873	1	103	
HARNESS-WIRE-PWR SUPPLY	080598-27	1	103	
HOLDER-FUSE-INLINE-TYPE HFA-R	064538	2	000	
JACK A.-FLAVORBURST	X56353	2	103	
KIT A.-HOPPER CVR-14 QT-BLA	X69146	1	103	
COVER-HOPPER-14 QT-BLACK	041682-BLA	2	103	
KIT A.-TUNE C712 SIMPL PU	X49463-81	1	000	

DESCRIPTION	PART NUMBER	QTY.	WARR. CLASS	REMARKS
KIT A.-BEATER FRONT SHOES	X50350	2	000	
BEARING-FRONT-SHOE	050348	2	000	
SHOE-FRONT HELIX *REAR*	050346	2	000	
SHOE-FRONT HELIX *FRONT*	050347	2	000	
KIT A.-PUMP-SIMPLIFIED SS/SH	X56200-10	2	000	
GASKET-SIMPLIFIED PUMP VALVE	053527	2	000	
O-RING-1-3/4 OD X .139W	008904	2	000	
O-RING-11/16ODX.103W-RED	016132	2	000	
O-RING-2-1/8 OD X .139W-#225	020051	4	000	
O-RING 1/2 ID X .139W	048632	4	000	
RING-CHECK-FEED-TUBE	056524	2	000	
KIT A.-DRAW VALVE C712	X56200-17	1	000	
CAP-DESIGN 1.010"ID-6 POINT	014218	3	000	
O-RING-7/8 OD X .103W	014402	5	000	
O-RING-1/2OD X .070W	024278	4	000	
SEAL-DRAW VALVE	034698	1	000	
GASKET-DOOR HT 4"-DOUBLE	048926	2	000	
SEAL-DRIVE SHAFT	032560	2	000	
TOOL-O-RING REMOVAL-FREEZER	048260-WHT	1	000	
LABEL-3PH MTR PROT/1PH C-	025949	1	000	208-230V 60HZ 3PH
LABEL-CK MTR ROTATE-CW-EN	020090	1	000	208-230V 60HZ 3PH
LABEL-DOOR-MOVE PART	032749	1	000	
LABEL-SW-POWER-OFF/ON-SYMBOL	052632	1	000	
LABEL-WARN-CONDENSER-SHARP	059287	2	000	
LABEL-WARN-COVER	051433	5	000	
LABEL-WARN-ELEC-SGL-SMALL	032717	6	000	
LID-POWER SUPPLY *C722*	080153	1	103	
LIP-DRIP-NOSE CONE-TWIN	036434	1	000	
LUBRICANT-TAYLOR 4 OZ.	047518	1	000	
MAN-OPER C722	080568-M	1	000	
MOTOR-1.0 HP	013102-27	2	212	208-230V 60HZ 1PH

DESCRIPTION	PART NUMBER	QTY.	WARR. CLASS	REMARKS
MOTOR-1.0 HP	013102-33	2	212	208-230V 60HZ 3PH
MOTOR-FAN 185W *WITH GUARD*	500302-27	1	103	208-230V 60HZ 1PH
+CAPACITOR-RUN 4.0UF/400V	500311	1	103	208-230V 60HZ 1PH
MOTOR-FAN 95.3 CFM 2700 RPM	062253-27	1	103	
+SHROUD-DANFOSS	068883	1	103	
+SCREW-10-32X3/8 UNSL HWH SERR	039381	4	000	
+GUARD-FAN	028534-1	1	103	
MOTOR-GEAR SENSORLESS BLDC 24V	068542-05	2	103	
NUT-STUD-BLACK 2.563 LONG	058764	2	103	
NUT-STUD-BLACK 3.250 LONG	058765	2	103	
ORIFICE	022465-100	2	103	
+O-RING-3/8 OD X .070W	016137	4	000	
PAIL-MIX 10 QT.	013163	1	000	
PAN A.-DRIP 15 1/8 LONG	X51601	1	103	
PAN A.-DRIP-HINGED	X41844	1	103	
+CHANNEL-REAR BEARING DRIP	041819	1	103	
PAN-DRIP	080226	1	103	
PANEL A.-FRONT	X68777	1	103	
PANEL A.-FRONT-LOWER	X68858	1	103	
PANEL A.-SIDE RIGHT	X68854	1	103	
PANEL-REAR	080162	1	103	
PANEL-SIDE LEFT	068851	1	103	
PCB A.-CONTROL UVC4	X69137-SER	1	212	MODULE-PROGRAM C722 UVC4 X40615
CONTROL-UVC4	X68114-SER	1	212	
PCB A.-INTERFACE-HT-SS-UK ROHS	X63964-SER	2	212	LOWER CONTROL
PCB A.-INTERFACE BASE-UK	X63920-SER	2	212	
CHIP-SOFTWARE MIX LEVEL	X40799-SER	2	103	
PCB A.-ROHS-PERSONALITY-HT-SS	X63922-SER	2	212	
PCB A.-INTERFACE*ROHS	X63925-SER	1	212	DEC PLATE
CHIP-SOFTWARE FP	X40821-SER	1	103	
+CABLE-RIBBON-14C-3"L-SIL/SIL	056864	1	212	

DESCRIPTION	PART NUMBER	QTY.	WARR. CLASS	REMARKS
+INSULATOR-PCB-INTERFACE	057168	1	000	
PIN-COTTER-HAIRPIN-1/8DIA	044731	2	103	
PIN-RETAINING	X55450	2	103	PUMP
PISTON-PUMP-SIMPLIFIED*SHORT	069922	2	103	
PLATE-DEC	080158	1	103	
PLATE A.-MOTOR MOUNT-R	X80145	1	103	
PLATE A.-MOTOR MOUNT-L	X80147	1	103	
PROBE A.-MIX	X56912	2	103	
+SPACER-PROBE-MIX-UPPER	056910	2	000	
+SPACER-MIX PROBE	056985	2	000	
PROBE-MIX OUT	056908	2	103	
+SPACER-PROBE-MIX-MIDDLE	056907	2	000	
PULLEY-2AK64-5/8 BORE	039695	2	103	
PULLEY-2AK1.72PD-5/8 BORE	080227	2	103	
PUMP A.-MIX SIMPLIFIED S.	X69928-14S	2	103	
ADAPTOR-MIX INLET-SS-RED	X80250	2	103	
CAP-VALVE BODY SS	056874-14	2	103	
CYLINDER-PUMP HOPPER SOFTSER	069920	2	103	
GASKET-SIMPLIFIED PUMP VALVE	053527	2	000	
O-RING-2-1/8 OD X .139W-#225	020051	4	000	
PIN-RETAINING	X55450	2	103	
PISTON-PUMP-SIMPLIFIED*SHORT	069922	2	103	
+CLIP-RETAINER-MIX PUMP	044641	2	103	
RELAY-3 POLE-20A-208/240 50/60	066795-33	1	103	UPPER CONTROL
RELAY-DPDT 100UA TO 7A 1/8HP	052111-03	2	103	UPPER CONTROL
RELAY-DPDT 100UA TO 7A	052111-76	2	103	PUMP
RELAY-START-COMPRESSOR-TL3G	047702-27	1	103	DANFOSS/AUX
RELAY-START-COMPRESSOR	062363	1	103	MAIN COMP
RING A.-AIR FLOW-COND.	X57006	1	103	208-230V 60HZ 3PH
RING-CHECK-FEED-TUBE	056524	2	000	
SANITIZER-STERA SHEEN -GREEN	055492	1	000	

DESCRIPTION	PART NUMBER	QTY.	WARR. CLASS	REMARKS
SHAFT A.-DRIVE-MIX PUMP-HOPPER	X41947	2	103	
CRANK-DRIVE-HOPPER MIX PUMP	039235	2	103	
O-RING 1/2 ID X .139W	048632	4	000	
O-RING-1-3/4 OD X .139W	008904	2	000	
SHAFT-DRIVE-MIX PUMP-HOPPER	041948	2	103	
SHAFT-BEATER *C722*	081707	2	103	M3013881 & UP - REPLACES 080617
+SEAL-DRIVE SHAFT	032560	2	000	
SHELF-DRIP TRAY	080782	1	103	
SHELL A.-INSULATED *C722*	X80671	1	512	
STUD-NOSE CONE *C602*	055987	4	103	
SHIELD-SPLASH-WIRE *C722*C723*	046177-SP	1	103	
SHROUD A.-CONDENSER	X56922	1	103	208-230V 60HZ 3PH
SHROUD-DANFOSS	068883	1	103	DANFOSS/AUX
SUPPLY-POWER 240W 24VDC	068571-27	1	103	
+ENCLOSURE-POWER SUPPLY	080152	1	103	
+GUARD-POWER SWITCH	034830	1	103	
+LID-POWER SUPPLY	080153	1	103	
SWITCH A.-DUAL LEVER	X69838	1	103	
ACTUATOR-TANDEM LEAF	062408	2	103	
BRACKET-SWITCH *C71X*	069839	1	103	
SWITCH-LEVER-SPDT-10A-125-250V	028889	4	103	
WASHER-#6 SAE FLAT 18-8 SS	023546	2	000	
SWITCH A.-REED INTERLOCK DOOR	X65658	1	103	
SWITCH-REED*DOOR INTERLOCK*68"	056771	1	103	
SPRING-INTERLOCK DOOR	065409	1	000	
SWITCH-PRESSURE 350 PSI-SOLDER	048231	1	103	208-230V 60HZ 1PH
SWITCH-PRESSURE 440 PSI-SOLDER	048230	1	103	208-230V 60HZ 3PH
SWITCH-TOGGLE-DPDT*VDE APPROVD	054809	1	103	
STARTER-1 PHASE 4 TO 6.5 AMP	066794-27J	2	103	208-230V 60HZ 1PH - UPPER CONTROL
OVERLOAD-THERMAL-1P-4.0/6.5A	067461-1J	2	103	208-230V 60HZ 1PH
STARTER-3 PHASE 2.5 TO 4	066794-33H	2	103	208-230V 60HZ 3PH

DESCRIPTION	PART NUMBER	QTY.	WARR. CLASS	REMARKS
OVERLOAD-THERMAL-3P-2.5/4.0A	067461-3H	2	103	208-230V 60HZ 3PH
STUD-NOSE CONE	055987	4	103	
TOOL-O-RING REMOVAL-FREEZER	048260-WHT	1	000	
TOOL-MIX PUMP SHAFT REMOVAL	057167	1	000	
TRANS.-240V PR1/24V SEC 1	030132-27	1	103	
TRANS.-CONT.-32VA 120/200/240V	054834	1	103	
TRAY-DRIP *C722*C723*	080781	1	103	
TRIM-REAR CORNER-L	080238	1	103	
+BUSHING-PANEL	013289	2	103	
+SCREW-8X3/8 SAW SLOT PAN HEAD	013234	2	000	
TRIM-REAR CORNER-R	068847	1	103	
TUBE A.-FEED-SS-5/32 HOLE DIA	X29429-2	2	103	
VALVE-ACCESS-1/4MFL X 3/8 ODSDR	053565	4	103	LINE A.-DISCHARGE *C723*
+CAP-VALVE-ACCESS 9/16 HEX	054518	4	000	
+CAP-VALVE-ACCESS 13/16 HEX	054519	4	000	
+COUPLING-3/8FS X 1/4FS	031791	3	103	
VALVE-EPR 1/4S	022665	1	103	LINE A.-DANFOSS *C723*
VALVE-EXP-AUTO-1/4S X1/4 FPT	046365	2	103	
+BOOT-VALVE-EXPANSION	050900	2	000	
VALVE-SOLENOID 7/16 ORF 5/8O	048626-27	2	103	
VALVE-SOLENOID 7/64ORF X 1/4S	043449-27	2	103	LINE A.-LIQUID *C723*

HOPPER AGITATOR - C72227FWBE

DESCRIPTION	PART NUMBER	QTY.	WARR. CLASS	REMARKS
BLADE A.-AGITATOR *794*	X56591-SP	2	103	
BODY-AGITATOR HOUSING	056588	2	103	
BLOCK-TERMINAL 2P .25 SPADE	051644	1		
HARNESS-WIRE-MIX LVL	068873-HA	1	103	
HOUSING A.-AGITATOR	X56586-03	4	103	
BODY-AGITATOR HOUSING	056588	2	103	
CAP-AGITATOR HOUSING	080827	2	103	

DESCRIPTION	PART NUMBER	QTY.	WARR. CLASS	REMARKS
MAGNET A.-AGITATOR-INNER	066937	2	103	
MOTOR-AGITATOR-24VAC 50/60 H	050535-03	2	103	
+CAPACITOR-MOTOR-AGITATOR	057525	2	103	
O-RING-1-3/8 OD X .070W	017395	2	000	
PLATE-HOLDING-AGITATOR	056587	2	103	
SCREW-4-40X1/4 SOCKET HEAD	600165	8	000	
SCREW-8-32X3/16 SOCKET SET	006812	4	000	
SHELL A.-INSULATED *C722*	X69448-SER	1	512	
STUD-NOSE CONE	055987	4	103	
TRANS.-120/208/240V PRI 24VSEC	051660	1	103	

WATER COOLED

DESCRIPTION	PART NUMBER	QTY.	WARR. CLASS	REMARKS
ACCUMULATOR-COPPER 2"DIA 13"	053377	1		
BRACKET-CAP/RELAY *C723*	069175	1		
BRACKET-FAN *453/750*	038641	1		
CONDENSER-WC-SPIRAL 11-1/	049309	1		
COUPLING-3/8FS X 1/4FS	031791	1		
COVER-ACCESS *C723*WC	069196	1		
HARNESS-WIRE-CAP&RELAY *C722	080597-W	1		
HARNESS-WIRE-CAP/RELAY BOX	069079-27	1		
LABEL-8 FUSE REPLACEMENT	074978-8	1		
LABEL-INLET	037288	1		
MOTOR-FAN-25W 230V	015184-27	1		
+FAN-5 BLADE 10 " PUSH	013043	1		
PANEL-REAR *C722*WC	080673	1		
PANEL-SIDE-RIGHT *C723*WC	069170	1		
SWITCH-PRESSURE 350 PSI-SOLD	048231	1		
VALVE-ACCESS-1/4MFL X 3/8ODS	053565	1		
VALVE A.-WATER *C723*WC	X69150	1		
+BRACKET A.-FITTING*C706/C707	X64145-SP2	1		
+VALVE-WATER 3/8 REG/HEAD PRE	046686	1		

DESCRIPTION	PART NUMBER	QTY.	WARR. CLASS	REMARKS
+ELBOW-3/8MPT X 1/2MFL-BRASS	067125	2		
+NIPPLE-3/8 X 2 GALV	069149	1		

TOP AIR DISCHARGE

DESCRIPTION	PART NUMBER	QTY.	WARR. CLASS	REMARKS
PANEL A.-DUCT-RIGHT	X68875	1		

REAR MIX LIGHTS

DESCRIPTION	PART NUMBER	QTY.	WARR. CLASS	REMARKS
CABLE-RIBBON-10C-73 DIL/D	040040-030	1		
TRIM A.-CORNER-LIGHTS	X80240	1		

C72240FWBE - 220-240V 50HZ 1PH - A/C-BRISTOL - (R404A) - ROHS COMPLIANT - HOPPER AGITATOR

DESCRIPTION	PART NUMBER	QTY.	WARR. CLASS	REMARKS
BLOCK-TERMINAL 2P L1,N	039421	1	103	
BRACKET-CAPACITOR C	059353	1	103	
CAPACITOR A.-RF	X58666	1	000	
COMPRESSOR L63A113BBKA	048259-40	1	512	
+CAPACITOR-RUN 25UF/370VAC	023739	1	103	
+CAPACITOR-START 161-193UF	031790	1	103	
+RELAY-START-COMPRESSOR	038146	1	103	
DIAGRAM-WIRING	080504-40	1	000	
HARNESS-WIRE-MAIN POWER *	069083-40G	1	103	
HARNESS-WIRE-CAP/RELAY BOX	069079-40	1	103	
HARNESS-WIRE-CAP&RELAY *C	080597	1	103	
HARNESS-WIRE-PWR SUPPLY	080598-40	1	103	
MOTOR-1.0 HP	013102-34	1	212	
PULLEY-2AK21 X.6255-.6265	080510	2	103	
RELAY-DPDT 100UA TO 7A	052111-03	2	103	

Model C722
080525-27
6/3/13

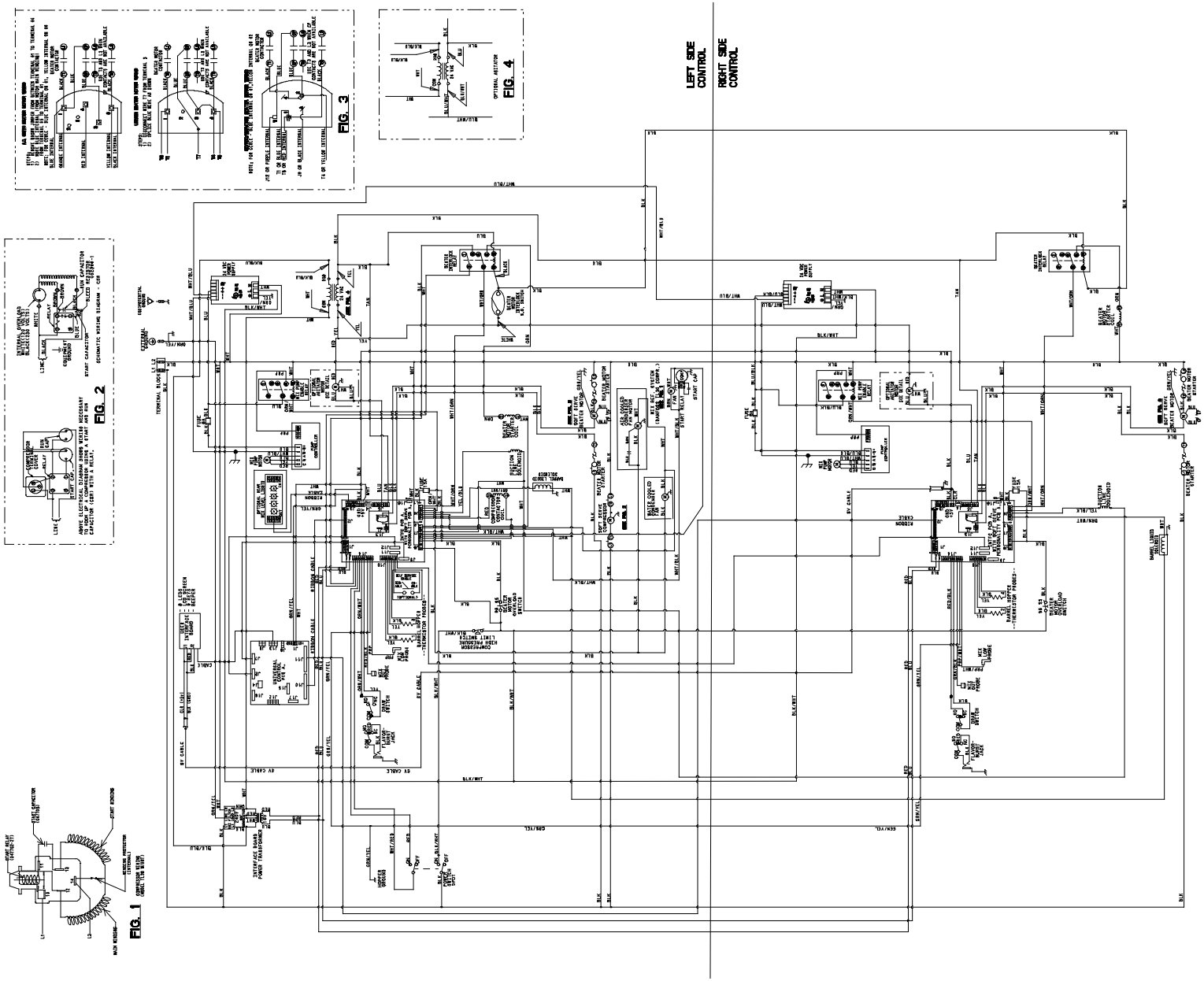

	UVC4 BOARD	FUNCTION	JUMPER INSTALLED INITIALLY
JP1	PINS 1 AND 2	JUMPER INSTALLED - BARREL AND HOPPER TEMPERATURES ARE CHECKED DURING AUTO/STANDBY. UNIT IS LOCKED OUT IF EITHER BARREL OR HOPPER IS TOO WARM FOR A PERIOD OF TIME. LOCKOUT OCCURS WHEN BARREL OR HOPPER IS ABOVE 45F(7C) FOR MORE THAN ONE HOUR OR ABOVE 41F(5C) FOR MORE THAN FOUR HOURS.	YES
		NO JUMPER INSTALLED - NO LOCKOUT DURING AUTO/STANDBY IF BARREL OR HOPPER IS TOO WARM FOR A PERIOD OF TIME.	
	PINS 3 AND 4	RESERVED (DO NOT USE)	NO
JP2	PINS 1 AND 2	DOMESTIC CONFIGURATION - JUMPER INSTALLED. HOPPER TEMPERATURE NOT DISPLAYED ON SCREEN/HEAT SYMBOL KEYS ONLY ACTIVE WHEN A LOCKOUT CONDITION HAS OCCURRED.	YES
		INTERNATIONAL CONFIGURATION - NO JUMPER INSTALLED. HOPPER TEMPERATURES DISPLAYED ON SCREEN/MANUAL HEAT CYCLE START BY SELECTING HEAT SYMBOL	
JP3		RESERVED (DO NOT USE)	NO
JP4		RESERVED (DO NOT USE)	NO
JP5		RESERVED (DO NOT USE)	NO
JP6		RESERVED (DO NOT USE)	NO
JP7		JUMPER INSTALLED DISABLES RESET.	NO
RTCK		RESERVED (DO NOT USE)	NO
DBGEN		RESERVED (DO NOT USE)	NO

	LEFT BARREL INTERFACE BOARD	FUNCTION	JUMPER INSTALLED INITIALLY
W1		RESERVED (DO NOT USE)	NO
W2		JUMPER INSTALLED - FORCE BRUSH CLEAN STATUS.	NO
W3		RESERVED (DO NOT USE)	NO
W4		JUMPER INSTALLED - OPEN ALL LEFT SOLENOIDS.	NO
W5		RESERVED (DO NOT USE)	NO
W6		JUMPER INSTALLED - REDUCED MIX LOW SENSITIVITY.	NO
W7		JUMPER INSTALLED - REDUCED MIX OUT SENSITIVITY.	NO
J10		JUMPER INSTALLED W/SWITCH - SELF SERVE APPLICATION ONLY. LOCKS OUT TOUCH PANEL. NEW SWITCH ACTS AS THE ON/OFF ABILITY TO ACTIVATE THE TOUCH PANEL.	NO
A		0-6 AMP BEATER MOTOR AMPERAGE RANGE	NO
B		0-12 AMP BEATER MOTOR AMPERAGE RANGE	YES

	RIGHT BARREL INTERFACE BOARD	FUNCTION	JUMPER INSTALLED INITIALLY
W1		RESERVED (DO NOT USE)	NO
W2		JUMPER INSTALLED - ENABLES 59F HOPPER TEMPERATURE CHECK.	YES
W3		RESERVED (DO NOT USE)	NO
W4		JUMPER INSTALLED - OPEN ALL RIGHT SOLENOIDS.	NO
W5		RESERVED (DO NOT USE)	NO
W6		JUMPER INSTALLED - REDUCED MIX LOW SENSITIVITY.	NO
W7		JUMPER INSTALLED - REDUCED MIX OUT SENSITIVITY.	NO
A		0-6 AMP BEATER MOTOR AMPERAGE RANGE	NO
B		0-12 AMP BEATER MOTOR AMPERAGE RANGE	YES

NOTE:

1. STATIC ELECTRICITY MAY CAUSE DAMAGE TO SOLID STATE COMPONENTS. ELIMINATE STATIC ELECTRICITY BY TOUCHING GROUNDED UNIT BEFORE HANDLING SOLID STATE COMPONENTS.

2. RED WIRE ON RIBBON CABLES MUST BE CONNECTED TO PIN 1 AT EACH END.

GROUND FRAME SECURELY

Model C722
080525-40
6/3/13

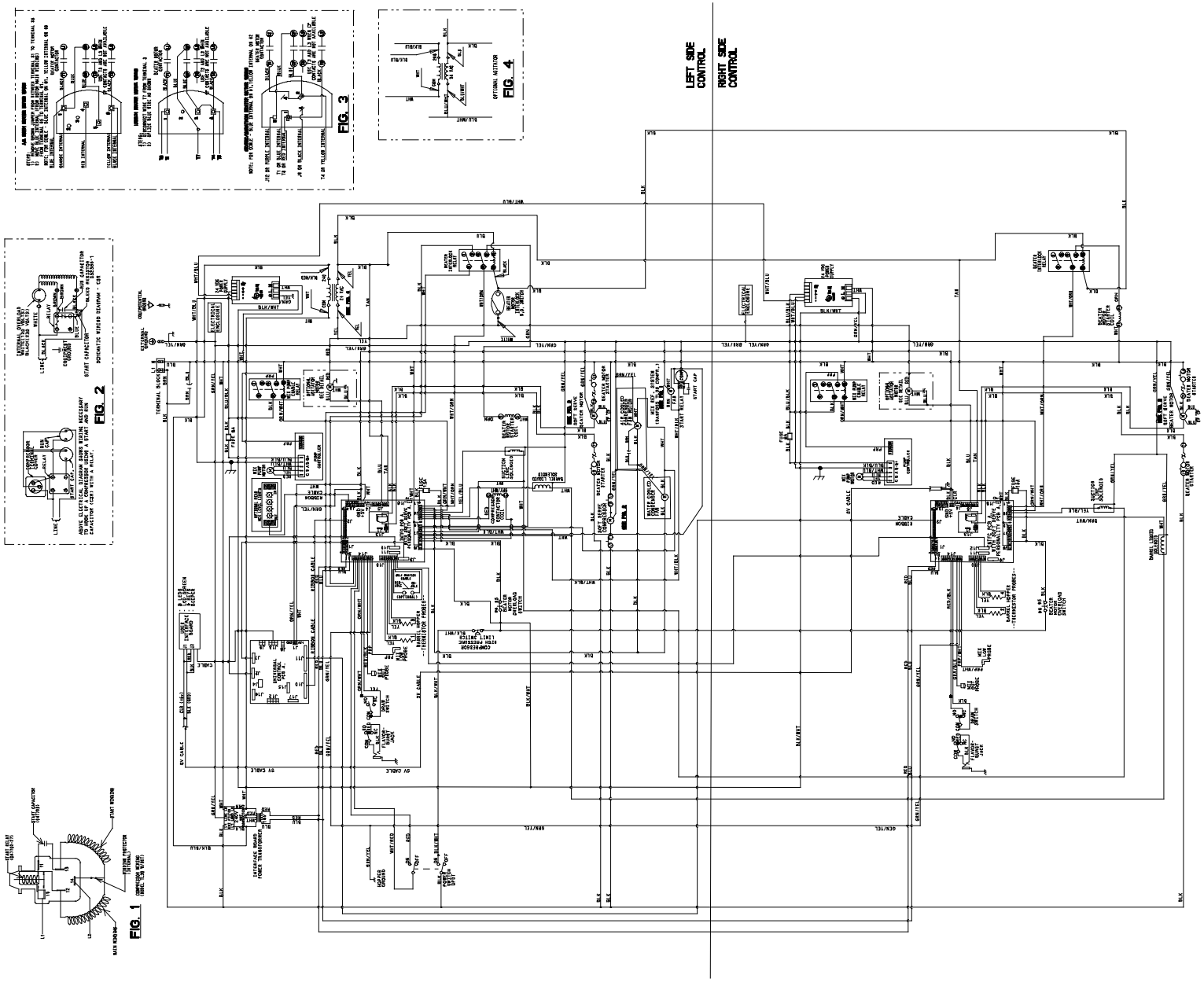

	UVC4 BOARD	FUNCTION	JUMPER INSTALLED INITIALLY
JP1	PINS 1 AND 2	JUMPER INSTALLED - BARREL AND HOPPER TEMPERATURES ARE CHECKED DURING AUTO/STANDBY. UNIT IS LOCKED OUT IF EITHER BARREL OR HOPPER IS TOO WARM FOR A PERIOD OF TIME. LOCKOUT OCCURS WHEN BARREL OR HOPPER IS ABOVE 45F(7C) FOR MORE THAN ONE HOUR OR ABOVE 41F(5C) FOR MORE THAN FOUR HOURS.	YES
		NO JUMPER INSTALLED - NO LOCKOUT DURING AUTO/STANDBY IF BARREL OR HOPPER IS TOO WARM FOR A PERIOD OF TIME.	
	PINS 3 AND 4	RESERVED (DO NOT USE)	NO
JP2	PINS 1 AND 2	DOMESTIC CONFIGURATION - JUMPER INSTALLED. HOPPER TEMPERATURE NOT DISPLAYED ON SCREEN/HEAT SYMBOL KEYS ONLY ACTIVE WHEN A LOCKOUT CONDITION HAS OCCURRED. INTERNATIONAL CONFIGURATION - NO JUMPER INSTALLED. HOPPER TEMPERATURES DISPLAYED ON SCREEN/MANUAL HEAT CYCLE START BY SELECTING HEAT SYMBOL.	NO
JP3		RESERVED (DO NOT USE)	NO
JP4		RESERVED (DO NOT USE)	NO
JP5		RESERVED (DO NOT USE)	NO
JP6		RESERVED (DO NOT USE)	NO
JP7		JUMPER INSTALLED DISABLES RESET.	NO
RTCK		RESERVED (DO NOT USE)	NO
DBGEN		RESERVED (DO NOT USE)	NO

	LEFT BARREL INTERFACE BOARD	FUNCTION	JUMPER INSTALLED INITIALLY
W1		RESERVED (DO NOT USE)	NO
W2		JUMPER INSTALLED - FORCE BRUSH CLEAN STATUS.	NO
W3		RESERVED (DO NOT USE)	NO
W4		JUMPER INSTALLED - OPEN ALL LEFT SOLENOIDS.	NO
W5		RESERVED (DO NOT USE)	NO
W6		JUMPER INSTALLED - REDUCED MIX LOW SENSITIVITY.	NO
W7		JUMPER INSTALLED - REDUCED MIX OUT SENSITIVITY.	NO
J10		JUMPER INSTALLED W/SWITCH - SELF SERVE APPLICATION ONLY. LOCKS OUT TOUCH PANEL. NEW SWITCH ACTS AS THE ON/OFF ABILITY TO ACTIVATE THE TOUCH PANEL.	NO
A		0-6 AMP BEATER MOTOR AMPERAGE RANGE	NO
B		0-12 AMP BEATER MOTOR AMPERAGE RANGE	YES

	RIGHT BARREL INTERFACE BOARD	FUNCTION	JUMPER INSTALLED INITIALLY
W1		RESERVED (DO NOT USE)	NO
W2		JUMPER INSTALLED - ENABLES 59F HOPPER TEMPERATURE CHECK.	YES
W3		RESERVED (DO NOT USE)	NO
W4		JUMPER INSTALLED - OPEN ALL RIGHT SOLENOIDS.	NO
W5		RESERVED (DO NOT USE)	NO
W6		JUMPER INSTALLED - REDUCED MIX LOW SENSITIVITY.	NO
W7		JUMPER INSTALLED - REDUCED MIX OUT SENSITIVITY.	NO
A		0-6 AMP BEATER MOTOR AMPERAGE RANGE	NO
B		0-12 AMP BEATER MOTOR AMPERAGE RANGE	YES

NOTE:

1. STATIC ELECTRICITY MAY CAUSE DAMAGE TO SOLID STATE COMPONENTS. ELIMINATE STATIC ELECTRICITY BY TOUCHING GROUNDED UNIT BEFORE HANDLING SOLID STATE COMPONENTS.
2. RED WIRE ON RIBBON CABLES MUST BE CONNECTED TO PIN 1 AT EACH END.

GROUND FRAME SECURELY