Models C708 & C716

Heat Treatment Soft Serve Freezer

Operating Instructions

059061-M

6/17/08

Complete this page for quick reference when service is required:

Taylor Distributor: _____

Address: _____

Phone: _____

Service: _____

Parts: _____

Date of Installation: _____

Information found on the data label:

Model Number: _____

Serial Number: _____

Electrical Specs: Voltage _____ Cycle _____

Phase _____

Maximum Fuse Size: _____ A

Minimum Wire Ampacity: _____ A

© January, 2005 Taylor
All rights reserved.
059061-M

TAYLOR®

The word Taylor and the Crown design are registered trademarks in the United States of America and certain other countries.

Taylor Company
a division of Carrier Commercial Refrigeration, Inc.
750 N. Blackhawk Blvd.
Rockton, IL 61072

Table of Contents

Section 1 To the Installer 1

Installer Safety 1
Site Preparation 1
Air Cooled Units 2
Water Connections (Water Cooled Units Only) 2
Electrical Connections 2
Beater Rotation 3
Refrigerant 3

Section 2 To the Operator 4

Compressor Warranty Disclaimer 4

Section 3 Safety 5

Section 4 Operator Parts Identification 7

Model C708 7
Model C716 8
Model C708 Single Spout Door and Beater Assembly 9
Model C716 Door and Beater Assembly 10
X57029-XX Pump A. - Mix Simplified (Model C708) 11
X57029-XX Pump A. - Mix Simplified (Model C716) 12
Accessories 13
Brush Kit Assembly X44127 14

Section 5 Important: To the Operator 15

Symbol Definitions 16
Operating Screen Descriptions 17
Freezer Locks 20
Manager's Menu 22

Section 6 Operating Procedures 29

Freezing Cylinder Assembly 29
Freezer Door Assembly 31
Mix Pump Assembly 34
Sanitizing 37

Priming 39
Daily Closing Procedures 40
Daily Opening Procedures 41
Manual Brush Cleaning 42
Draining Product From The Freezing Cylinder 42
Rinsing 43
Hopper Cleaning 43
Disassembly 44
Brush Cleaning 45

Section 7 Important: Operator Checklist 46

During Cleaning and Sanitizing 46
Troubleshooting Bacterial Count 46
Regular Maintenance Checks 46
Winter Storage 47

Section 8 Troubleshooting Guide 48

Section 9 Parts Replacement Schedule 52

Section 10 Parts List 53

Wiring Diagrams 69

Note: Continuing research results in steady improvements; therefore, information in this manual is subject to change without notice.

© January, 2005 Taylor
All rights reserved.
059061-M

TAYLOR®

The word Taylor and the Crown design are registered trademarks in the United States of America and certain other countries.

Taylor Company
a division of Carrier Commercial Refrigeration, Inc.
750 N. Blackhawk Blvd.
Rockton, IL 61072

Section 1 To the Installer

The following are general installation instructions. For complete installation details, please see the check out card.

Installer Safety

In all areas of the world, equipment should be installed in accordance with existing local codes. Please contact your local authorities if you have any questions.

Care should be taken to ensure that all basic safety practices are followed during the installation and servicing activities related to the installation and service of Taylor equipment.

- Only authorized Taylor service personnel should perform installation and repairs on the equipment.
- Authorized service personnel should consult OSHA Standard 29CFRI910.147 or the applicable code of the local area for the industry standards on lockout/tagout procedures before beginning any installation or repairs.
- Authorized service personnel must ensure that the proper PPE is available and worn when required during installation and service.
- Authorized service personnel must remove all metal jewelry, rings, and watches before working on electrical equipment.

The main power supply(s) to the freezer must be disconnected prior to performing any repairs. Failure to follow this instruction may result in personal injury or death from electrical shock or hazardous moving parts as well as poor performance or damage to the equipment.

Note: All repairs must be performed by an authorized Taylor Service Technician.

This unit has many sharp edges that can cause severe injuries.

Site Preparation

Review the area the unit is to be installed in before uncrating the unit making sure that all possible hazards the user or equipment may come into have been addressed.

For Indoor Use Only: This unit is designed to operate indoors, under normal ambient temperatures of 70°-75°F (21°-24°C). The freezer has successfully performed in high ambient temperatures of 104°(40°C) at reduced capacities.

This unit must **NOT** be installed in an area where a water jet or hose can be used. **NEVER** use a water jet or hose to rinse or clean the unit. Failure to follow this instruction may result in electrocution.

This unit must be installed on a level surface to avoid the hazard of tipping. Extreme care should be taken in moving this equipment for any reason. Two or more persons are required to safely move this unit. Failure to comply may result in personal injury or equipment damage.

Uncrate the unit and inspect it for damage. Report any damage to your Taylor Distributor.

This piece of equipment is made in the USA and has USA sizes of hardware. All metric conversions are approximate and vary in size.

Air Cooled Units

DO NOT obstruct air intake and discharge openings:

Model C708: Requires a minimum of 6” (152 mm) of clearance on both sides and 0” in the rear of the unit.
Model C716: Requires a minimum of 3” (76 mm) of clearance on all sides. Install the deflector provided to prevent recirculation of warm air.

This will allow for adequate air flow across the condensers. Failure to allow adequate clearance can reduce the refrigeration capacity of the freezers and possibly cause permanent damage to the compressors.

Water Connections

(Water Cooled Units Only)

An adequate cold water supply must be provided with a hand shut-off valve. On the underside of the base pan or on the right side, two 3/8” I.P.S. water connections for inlet and outlet are provided for easy hook-up. 1/2” inside diameter water lines should be connected to the machine. (Flexible lines are recommended, if local codes permit.) Depending on local water conditions, it may be advisable to install a water strainer to prevent foreign substances from clogging the automatic water valve. There will be only one water “in” and one water “out” connection. DO NOT install a hand shut-off valve on the water “out” line! Water should always flow in this order: first, through the automatic water valve; second, through the condenser; and third, through the outlet fitting to an **open trap drain.**

A back flow prevention device is required on the incoming water connection side. Please refer to the applicable National, State, and local codes for determining the proper configuration.

Electrical Connections

In the United States, this equipment is intended to be installed in accordance with the National Electrical Code (NEC), ANSI/NFPA 70-1987. The purpose of the NEC code is the practical safeguarding of persons and property from hazards arising from the use of electricity. This code contains provisions considered necessary for safety. In all other areas of the world, equipment should be installed in accordance with the existing local codes. Please contact your local authorities.

FOLLOW YOUR LOCAL ELECTRICAL CODES!

Each freezer requires one power supply for each data label. Check the data label on the freezer for fuse, circuit ampacity and electrical specifications. Refer to the wiring diagram provided inside of the electrical box, for proper power connections.

CAUTION: THIS EQUIPMENT MUST BE PROPERLY GROUNDED! FAILURE TO DO SO CAN RESULT IN SEVERE PERSONAL INJURY FROM ELECTRICAL SHOCK!

This unit is provided with an equipotential grounding lug that is to be properly attached to the rear of the frame by the authorized installer. The installation location is marked by the equipotential bonding symbol (5021 of IEC 60417-1) on both the removable panel and the equipments frame.

- Stationary appliances which are not equipped with a power cord and a plug or another device to disconnect the appliance from the power source must have an all-pole disconnecting device with a contact gap of at least 3mm installed in the external installation.
- Appliances that are permanently connected to fixed wiring and for which leakage currents may exceed 10 mA, particularly when disconnected or not used for long periods, or during initial installation, shall have protective devices such as a GFI, to

protect against the leakage of current, installed by the authorized personnel to the local codes.

- Supply cords used with this unit shall be oil-resistant, sheathed flexible cable not lighter than ordinary polychloroprene or other equivalent synthetic elastomer-sheathed cord (Code designation 60245 IEC 57) installed with the proper cord anchorage to relieve conductors from strain, including twisting, at the terminals and protect the insulation of the conductors from abrasion.

Beater Rotation

Beater rotation must be clockwise as viewed looking into the freezing cylinder.

Note: The following procedures must be performed by an authorized Taylor service technician.

To correct rotation on a three-phase unit, interchange any two incoming power supply lines at freezer main terminal block only.

To correct rotation on a single-phase unit, change the leads inside the beater motor. (Follow diagram printed on motor.)

Electrical connections are made directly to the terminal block provided in the main control box, located: C708 - behind the rear panel.
C716 - behind the lower front panel.

Refrigerant

In consideration of our environment, Taylor proudly uses only earth friendly HFC refrigerants. The HFC refrigerant used in this unit is R404A. This refrigerant is generally considered non-toxic and non-flammable, with an Ozone Depleting Potential (ODP) of zero (0).

However, any gas under pressure is potentially hazardous and must be handled with caution.

NEVER fill any refrigerant cylinder completely with liquid. Filling the cylinder to approximately 80% will allow for normal expansion.

Refrigerant liquid sprayed onto the skin may cause serious damage to tissue. Keep eyes and skin protected. If refrigerant burns should occur, flush immediately with cold water. If burns are severe, apply ice packs and contact a physician immediately.

Taylor reminds technicians to be cautious of government laws regarding refrigerant recovery, recycling, and reclaiming systems. If you have any questions regarding these laws, please contact the factory Service Department.

WARNING: R404A refrigerant used in conjunction with polyolester oils is extremely moisture absorbent. When opening a refrigeration system, the maximum time the system is open must not exceed 15 minutes. Cap all open tubing to prevent humid air or water from being absorbed by the oil.

Section 2 To the Operator

Your freezers have been carefully engineered and manufactured to give you dependable operation. These units, when properly operated and cared for, will produce a consistent quality product. Like all mechanical products, they will require cleaning and maintenance. A minimum amount of care and attention is necessary if the operating procedures outlined in this manual are followed closely.

This Operator's Manual should be read before operating or performing any maintenance on your equipment.

Your Taylor freezer will NOT eventually compensate for and correct any errors during the set-up or filling operations. Thus, the initial assembly and priming procedures are of extreme importance. It is strongly recommended that personnel responsible for the equipment's operation, both assembly and disassembly, go through these procedures together in order to be properly trained and to make sure that no confusion exists.

In the event you should require technical assistance, please contact your local authorized Taylor Distributor.

Note: Warranty is valid only if the parts are authorized Taylor parts, purchased from an authorized Taylor Distributor, and the required service work is provided by an authorized Taylor service technician. Taylor reserves the right to deny warranty claims on equipment or parts if non-approved parts or refrigerant were installed in the machine, system modifications were performed beyond factory recommendations, or it is determined that the failure was caused by neglect or abuse.

Note: Constant research results in steady improvements; therefore, information in this manual is subject to change without notice.

If the crossed out wheeled bin symbol is affixed to this product, it signifies that this product is compliant with the EU Directive as well as other similar legislation in effect after August 13, 2005. Therefore, it must be collected separately after its use is completed, and cannot be disposed as unsorted municipal waste.

The user is responsible for returning the product to the appropriate collection facility, as specified by your local code.

For additional information regarding applicable local laws, please contact the municipal facility and/or local distributor.

Compressor Warranty Disclaimer

The refrigeration compressors on this machine are warranted for the term indicated on the warranty card accompanying this machine. However, due to the Montreal Protocol and the U.S. Clean Air Act Amendments of 1990, many new refrigerants are being tested and developed, thus seeking their way into the service industry. Some of these new refrigerants are being advertised as drop-in replacements for numerous applications. It should be noted that, in the event of ordinary service to this machine's refrigeration system, **only the refrigerant specified on the affixed data label should be used**. The unauthorized use of alternate refrigerants will void your compressor warranty. It will be the owner's responsibility to make this fact known to any technician he employs.

It should also be noted that Taylor does not warrant the refrigerant used in its equipment. For example, if the refrigerant is lost during the course of ordinary service to this machine, Taylor has no obligation to either supply or provide its replacement either at billable or unbillable terms. Taylor does have the obligation to recommend a suitable replacement if the original refrigerant is banned, obsoleted, or no longer available during the five year warranty of the compressor.

Taylor will continue to monitor the industry and test new alternates as they are being developed. Should a new alternate prove, through our testing, that it would be accepted as a drop-in replacement, then the above disclaimer would become null and void. To find out the current status of an alternate refrigerant as it relates to your compressor warranty, call the local Taylor Distributor or the Taylor Factory. Be prepared to provide the Model/Serial Number of the unit in question.

Section 3 Safety

We at Taylor Company are concerned about the safety of the operator when he or she comes in contact with the freezer and its parts. Taylor has gone to extreme efforts to design and manufacture built-in safety features to protect both you and the service technician. As an example, warning labels have been attached to the freezer to further point out safety precautions to the operator.

IMPORTANT - Failure to adhere to the following safety precautions may result in severe personal injury or death. Failure to comply with these warnings may damage the machine and its components. Component damage will result in part replacement expense and service repair expense.

DO NOT operate the freezer without reading this Operator Manual. Failure to follow this instruction may result in equipment damage, poor freezer performance, health hazards, or personal injury.

This unit is provided with an equipotential grounding lug that is to be properly attached to the rear of the frame by the authorized installer. The installation location is marked by the equipotential bonding symbol (5021 of IEC 60417-1) on both the removable panel and the equipments frame.

DO NOT use a water jet to clean or rinse the freezer. Failure to follow these instructions may result in serious electrical shock.

- **DO NOT** operate the freezer unless it is properly grounded.
- **DO NOT** operate the freezer with larger fuses than specified on the freezer data label.
- **DO NOT** attempt any repairs unless the main power supply to the freezer has been disconnected. Contact your local authorized Taylor Distributor for service.
- Stationary appliances which are not equipped with a power cord and a plug or another device to disconnect the appliance from the power source must have an all-pole disconnecting device with a contact gap of at least 3mm installed in the external installation.
- Appliances that are permanently connected to fixed wiring and for which leakage currents may exceed 10 mA, particularly when disconnected or not used for long periods, or during initial installation, shall have protective devices such as a GFI, to protect against the leakage of current, installed by the authorized personnel to the local codes.
- Supply cords used with this unit shall be oil-resistant, sheathed flexible cable not lighter than ordinary polychloroprene or other equivalent synthetic elastomer-sheathed cord (Code designation 60245 IEC 57) installed with the proper cord anchorage to relieve conductors from strain, including twisting, at the terminals and protect the insulation of the conductors from abrasion.

Failure to follow these instructions may result in electrocution. Contact your local authorized Taylor Distributor for service.

- **DO NOT** allow untrained personnel to operate this machine.
- **DO NOT** operate the freezer unless all service panels and access doors are restrained with screws.
- **DO NOT** remove any internal operating parts (example: freezer door, beater, scraper blades, etc.) unless all control switches are in the OFF position.

Failure to follow these instructions may result in severe personal injury from hazardous moving parts.

This unit has many sharp edges that can cause severe injuries.

- **DO NOT** put objects or fingers in the door spout. This may contaminate the product and cause severe personal injury from blade contact.
- **USE EXTREME CAUTION** when removing the beater asssembly. The scraper blades are very sharp.
- **CAUTION-SHARP EDGES:** Two people are required to handle the cup/cone dispenser. Protective gloves must be worn and the mounting holes must NOT be used to lift or hold the dispenser. Failure to follow this instruction can result in personal injury to fingers or equipment damage.

This freezer must be placed on a level surface. Failure to comply may result in personal injury or equipment damage.

Cleaning and sanitizing schedules are governed by your state or local regulatory agencies and must be followed accordingly. Please refer to the cleaning section of this manual for the proper procedure to clean this unit.

DO NOT obstruct air intake and discharge openings:

C708: A minimum of 6” (152 mm) air space is required on both sides and 0” on the rear.

C716: A minimum of 3” (76 mm) air space is required on all sides. Install the deflector provided to prevent recirculation of warm air.

Failure to follow these instructions may cause poor freezer performance and damage to the machines.

For Indoor Use Only: This unit is designed to operate indoors, under normal ambient temperatures of 70° - 75°F (21° - 24°C). The freezer has successfully performed in high ambient temperatures of 104°(40°C) at reduced capacities.

NOISE LEVEL: Airborne noise emission does not exceed 78 dB(A) when measured at a distance of 1.0 meter from the surface of the machine and at a height of 1.6 meters from the floor.

Section 4 Operator Parts Identification

Model C708

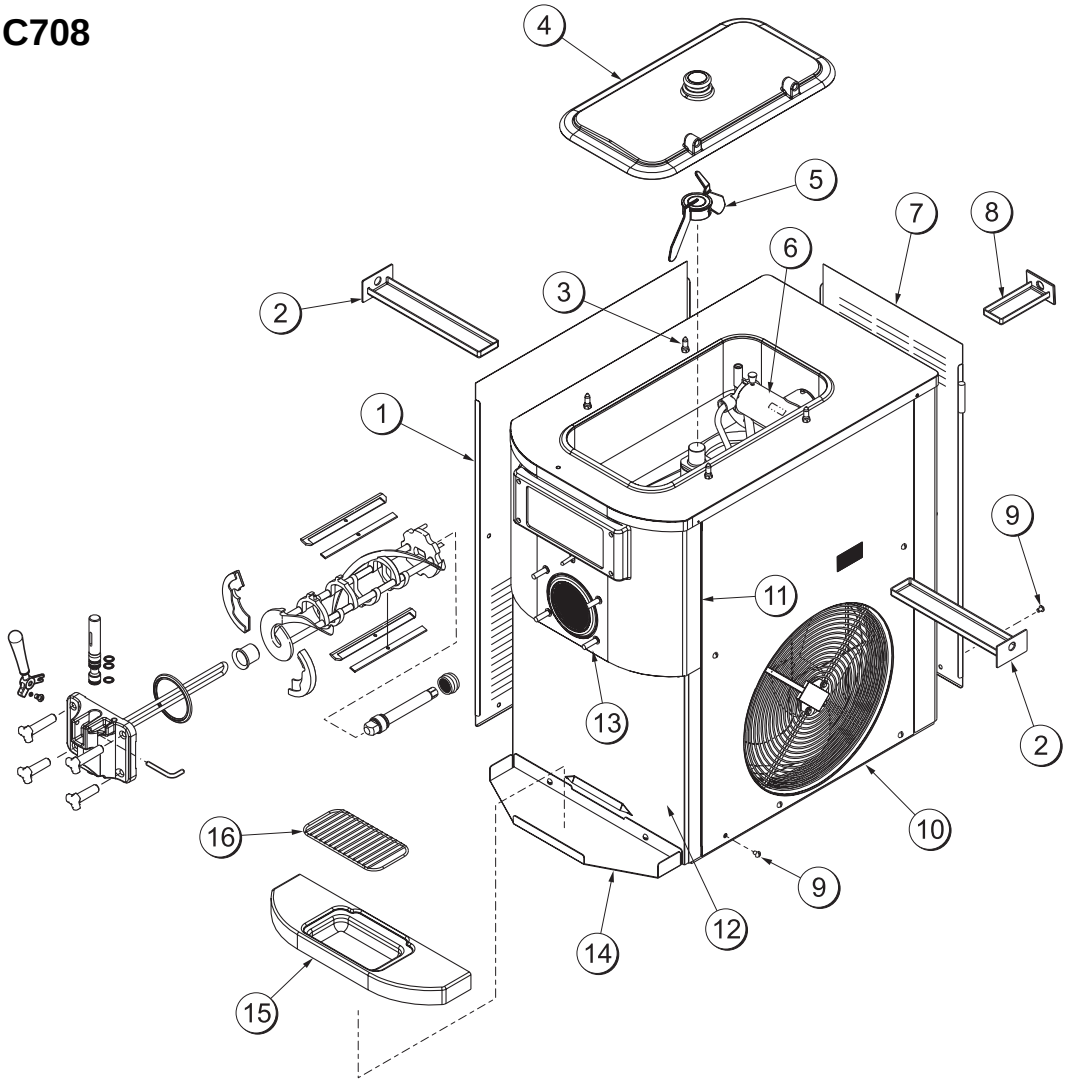

Figure 1

ITEM	DESCRIPTION	PART NO.
1	PANEL-SIDE-LEFT	056963
2	PAN-DRIP 11-5/8 LONG	027503
3	PIN-RETAINING-HOPPER CVR	043934
4	COVER-HOPPER *BLACK	053809-1
5	BLADE A.-AGITATOR	X56591
6	PUMP A.-MIX SIMPLIFIED S.S.	X57029-14
7	PANEL-REAR	056077
8	PAN A.-DRIP 5 1/2” LONG	X56074

ITEM	DESCRIPTION	PART NO.
9	SCREW-1/4-20X3/8 RHM-STNLS	011694
10	PANEL A-SIDE-RIGHT	X57871
11	PANEL A.-FRONT-UPPER	X59423
12	PANEL A.-FRONT-LOWER	X58955
13	STUD-NOSE CONE	055987
14	SHELF-TRAY-DRIP	056076
15	TRAY-DRIP	056858
16	SHIELD-SPLASH	049203

Model C716

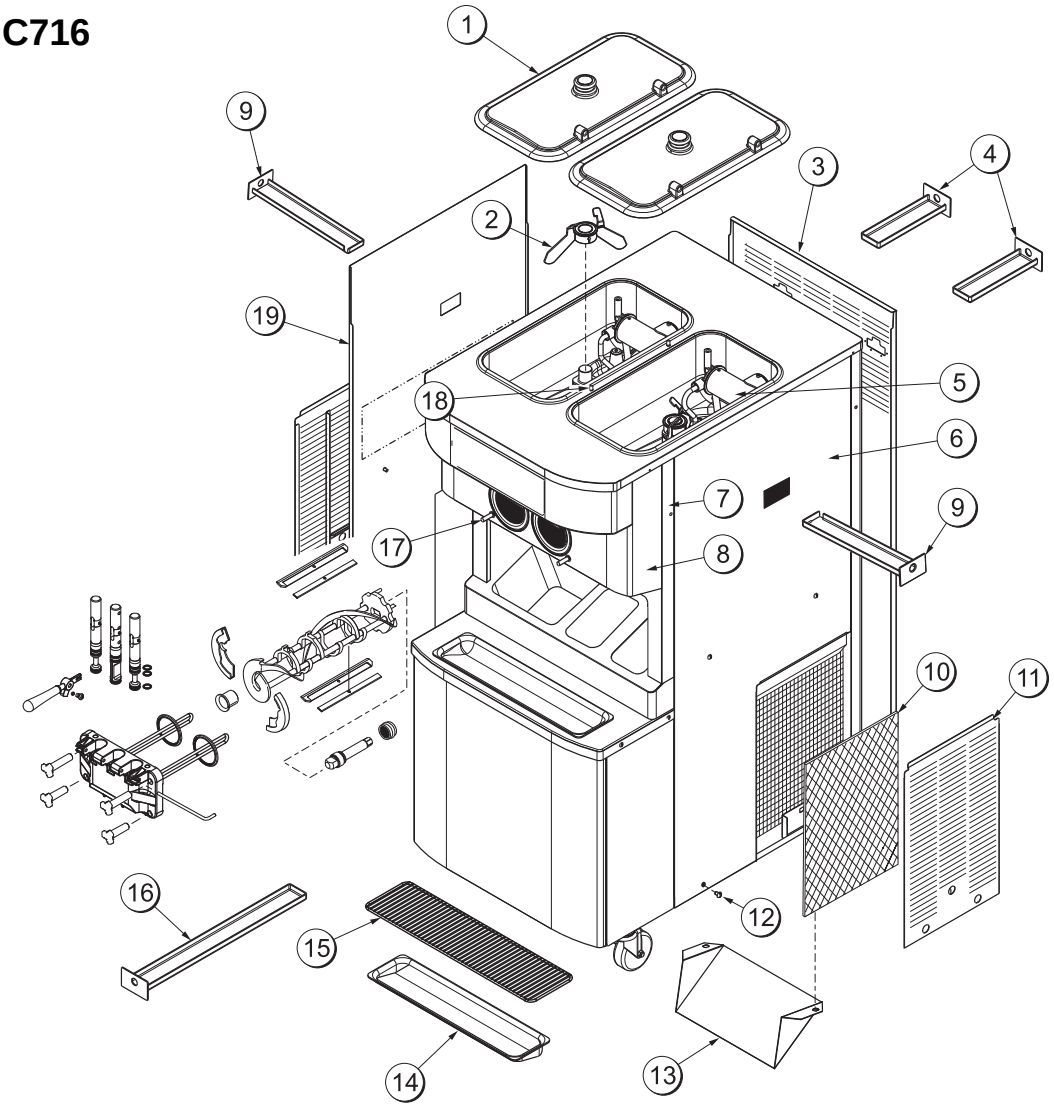

Figure 2

ITEM	DESCRIPTION	PART NO.
1	COVER-HOPPER	053809-1
2	BLADE A.-AGITATOR	X56591
3	PANEL-REAR	059916
4	PAN-DRIP 7.875	059737
5	PUMP A.-MIX SIMPLIFIED	X57029-14
6	PANEL-SIDE-RIGHT	059907
7	PANEL A.-FRONT	X63879
8	PANEL A.-FRONT	X59836
9	PAN-DRIP 12.5	059736
10	FILTER-AIR-POLY-FLO	052779-11

ITEM	DESCRIPTION	PART NO.
11	PANEL A.-FILTER-LOUVERED	X59928
12	SCREW-1/4-20 X 3/8 RHM-SS	011694
13	DEFLECTOR	059929
14	TRAY-DRIP-19-5/8 L X 4-7/8	033812
15	SHIELD-SPLASH-WIRE-19-3/4 L	033813
16	PAN-DRIP 19-1/2 LONG	035034
17	STUD-NOSE CONE	055987
18	PIN-RETAINING-HOPPER CVR	043934
19	PANEL-SIDE-LEFT	059906

061228

Model C708 Single Spout Door and Beater Assembly

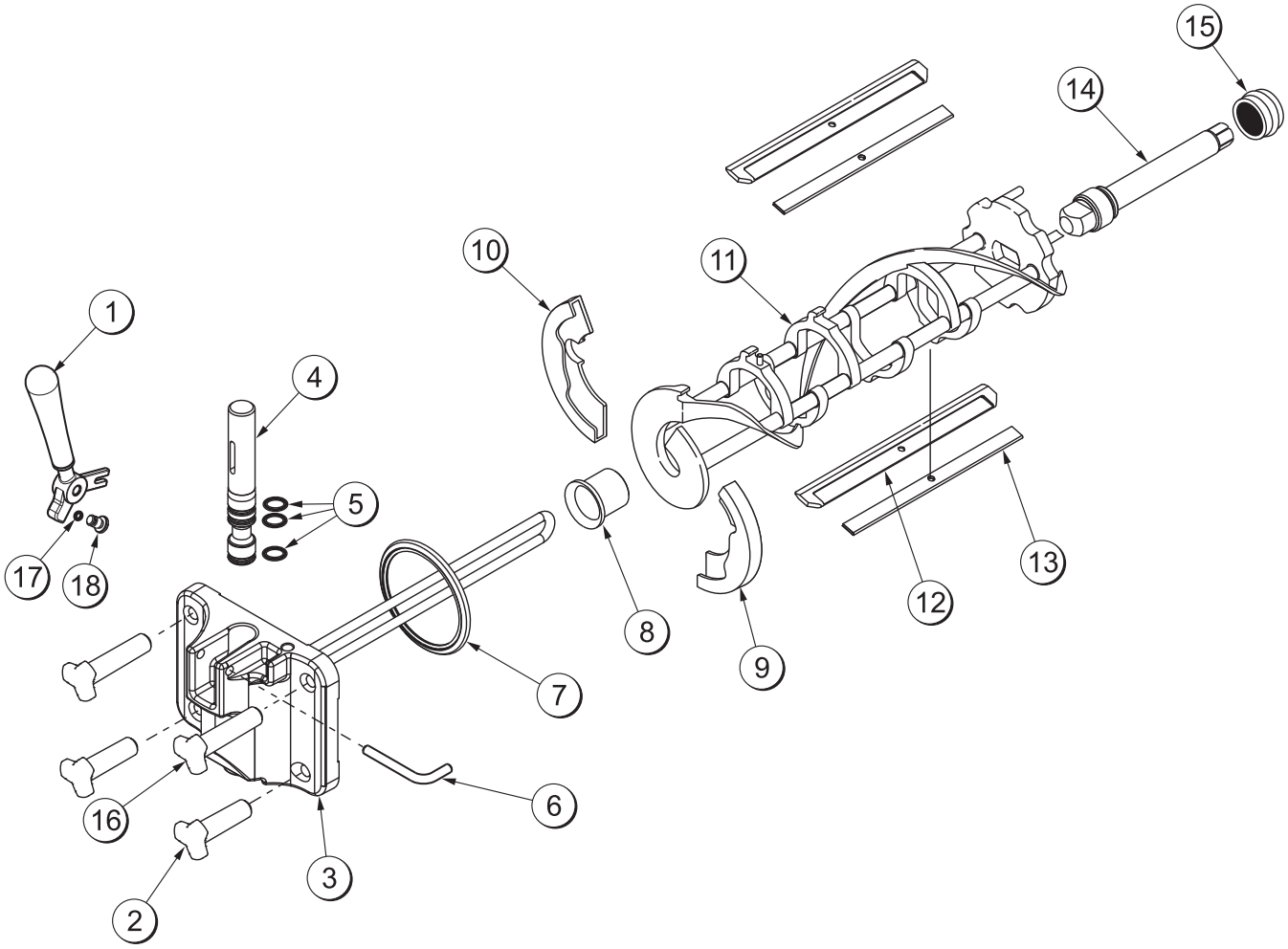

Figure 3

ITEM	DESCRIPTION	PART NO.
1	HANDLE A.-DRAW-WELDED	X56246
2	NUT-STUD-BLACK 2.563“	058764
3	DOOR A.-W/BAFFLE	X57332-SER
4	VALVE A.-DRAW	X55820
5	O-RING-DRAW VALVE-S.S.	014402
6	PIN-HANDLE-SS	055819
7	GASKET-DOOR HT 4”-DBL	048926
8	BEARING-FRONT-SHOE	050348
9	SHOE-FRONT HELIX *REAR*	050346

ITEM	DESCRIPTION	PART NO.
10	SHOE-FRONT HELIX *FRONT*	050347
11	BEATER A.-3.4QT-1 PIN	X46231
12	BLADE-SCRAPER-PLASTIC	046235
13	CLIP-SCRAPER BLADE 7.00	046236
14	SHAFT-BEATER	056078
15	SEAL-DRIVE SHAFT	032560
16	NUT-STUD-BLACK 3.250”	058765
17	O-RING-1/4 OD X .070W 50	015872
18	SCREW-ADJUSTMT-5/16-24	056332

Model C716 Door and Beater Assembly

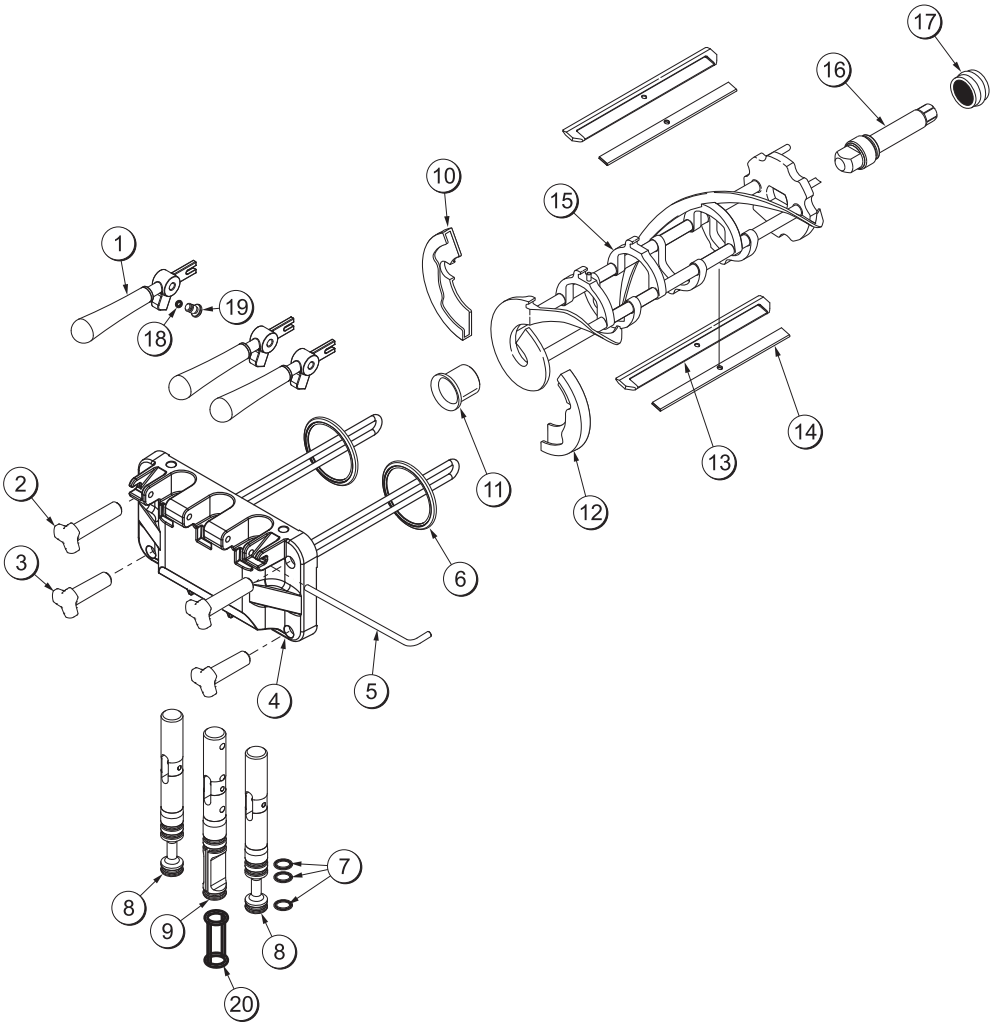

Figure 4

ITEM	DESCRIPTION	PART NO.
1	HANDLE A.-DRAW-WELDED	X56421-1
2	NUT-STUD-BLACK 3.250 LONG	058765
3	NUT-STUD*BLACK 2.563 LONG	058764
4	DOOR A.-3SPT*HT*LG BAF	X59923-SER
5	PIN-HANDLE-TWIN	059894
6	GASKET-DOOR HT 4”-DOUBLE	048926-1
7	O-RING--7/8 OD X .103W	014402
8	VALVE A.-DRAW	X59888
9	VALVE A.-DRAW*CENTER	X59890
10	SHOE-FRONT HELIX *FRONT*	050347

ITEM	DESCRIPTION	PART NO.
11	BEARING-FRONT-SHOE	050348
12	SHOE-FRONT HELIX *REAR*	050346
13	BLADE-SCRAPER-PLAS 8-1/8L	046235
14	CLIP-SCRAPER BLADE 7.00”	046236
15	BEATER A.-3.4QT-1 PIN	X46231
16	SHAFT-BEATER	032564
17	SEAL-DRIVE SHAFT	032560
18	O-RING-1/4 OD X .070W 50	015872
19	SCREW-ADJUSTMENT-5/16-24	056332
20	SEAL-DRAW VALVE H-RING	034698

080805

X57029-XX Pump A. - Mix Simplified (Model C708)

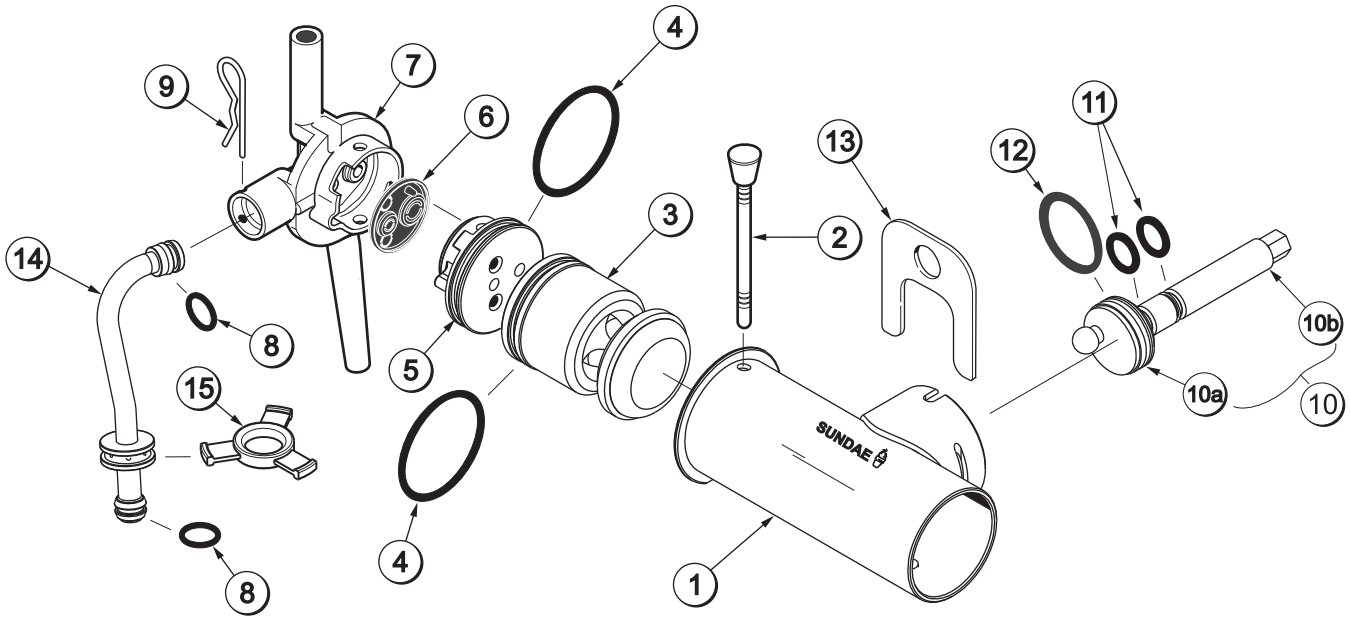

Figure 5

ITEM	DESCRIPTION	PART NO.
1 - 7	**PUMP ASSEMBLY - MIX SIMPLIFIED SOFT SERVE**	**X57029-14***
1	CYLINDER-PUMP-HOPPER-SOFT SERVE	057943
2	PIN A.-RETAINING	X55450
3	PISTON	053526
4	O-RING 2-1/8” OD - RED	020051
5	CAP-VALVE	056874-14*
6	GASKET - SIMPLIFIED PUMP VALVE	053527
7	ADAPTOR - MIX INLET	054825
8	O-RING - 11/16 OD - RED	016132

ITEM	DESCRIPTION	PART NO.
9	PIN - COTTER	044731
10	SHAFT A.-DRIVE-MIX PUMP-HOPPER	X41947
10a	CRANK-DRIVE	039235
10b	SHAFT-DRIVE	041948
11	O-RING - DRIVE SHAFT	048632
12	O-RING 1-3/4	008904
13	CLIP-MIX PUMP RETAINER	044641
14	TUBE A.-FEED HOPPER SOFT SERVE	X56521
15	RING-CHECK .120 OD	056524

***NOTE:** THE STANDARD PUMP X57029-XX IS A -14. OVERRUN CAN BE CHANGED HIGHER OR LOWER BY SUBSTITUTING THE CAP (056874-XX) WITH CAPS AVAILABLE -1 THROUGH -20. THE HIGHER THE DASH (-) NUMBER, THE HIGHER THE OVERRUN.

X57029-XX Pump A. - Mix Simplified (Model C716)

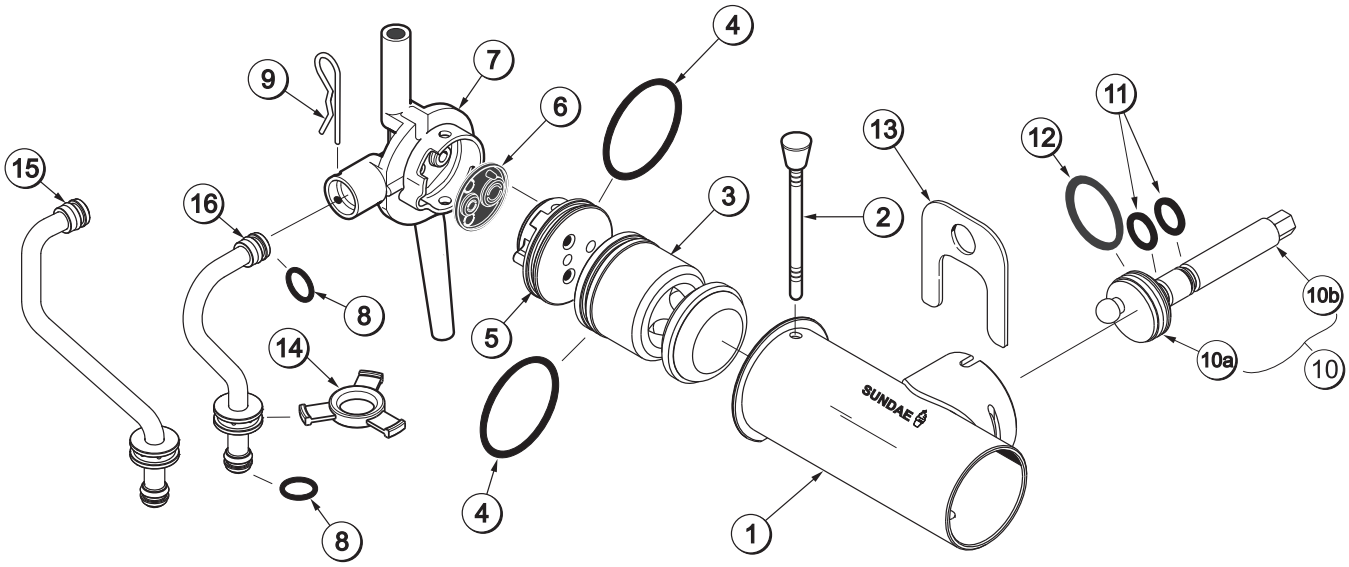

Figure 6

ITEM	DESCRIPTION	PART NO.
1 - 7	**PUMP ASSEMBLY - MIX SIMPLIFIED SOFT SERVE**	**X57029-14***
1	CYLINDER-PUMP-HOPPER-SOFT SERVE	057943
2	PIN A.-RETAINING	X55450
3	PISTON	053526
4	O-RING 2-1/8” OD - RED	020051
5	CAP-VALVE	056874-14*
6	GASKET - SIMPLIFIED PUMP VALVE	053527
7	ADAPTOR - MIX INLET	054825
8	O-RING - 11/16 OD - RED	016132

ITEM	DESCRIPTION	PART NO.
9	PIN - COTTER	044731
10	SHAFT A.-DRIVE-MIX PUMP-HOPPER	X41947
10a	CRANK-DRIVE	039235
10b	SHAFT-DRIVE	041948
11	O-RING - DRIVE SHAFT	048632
12	O-RING 1-3/4	008904
13	CLIP-MIX PUMP RETAINER	044641
14	RING-CHECK .120 OD	056524
15	TUBE A.-FEED-LEFT	X59808
16	TUBE A.-FEED-RIGHT	X59809

***NOTE:** THE STANDARD PUMP X57029-XX IS -14. OVERRUN CAN BE CHANGED HIGHER OR LOWER BY SUBSTITUTING THE CAP (056874-XX) WITH CAPS AVAILABLE -1 THROUGH -20. THE HIGHER THE DASH (-) NUMBER, THE HIGHER THE OVERRUN.

Accessories

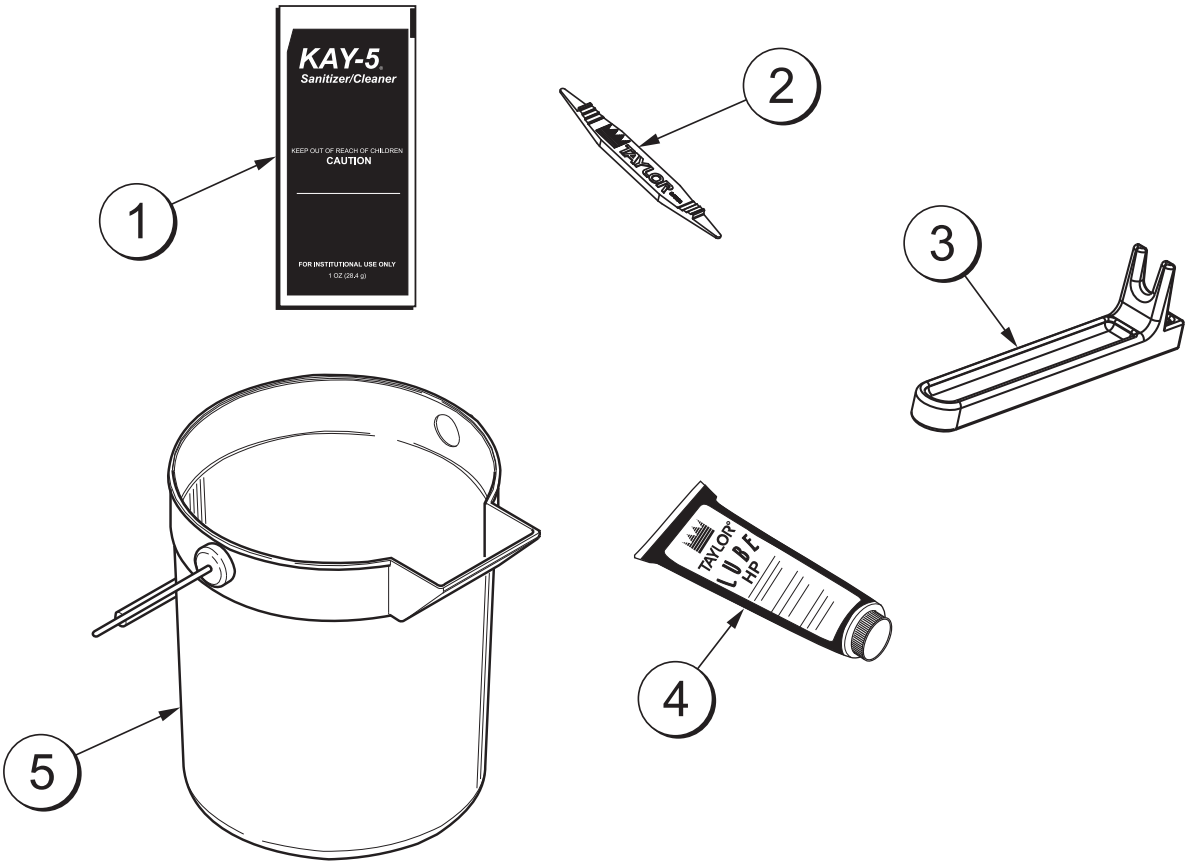

Figure 7

ITEM	DESCRIPTION	PART NO.
1	SANITIZER-KAY 5 CASE 125	041082
2	TOOL-O-RING REMOVAL	048260-WHT
3	TOOL-SHAFT-DRIVE-PUMP-HOPPER	057167
4	LUBRICANT-TAYLOR HI-PERF	048232

ITEM	DESCRIPTION	PART NO.
5	PAIL-MIX 10 QT.	013163
*	KIT A.-TUNE-UP (C708)	X56085
*	KIT A.-TUNE-UP (C716)	X49463-82
*	KIT A.-PARTS TRAY (C708)	X57797
*	KIT A.-PARTS TRAY (C716)	X58449

*NOT SHOWN

Brush Kit Assembly X44127

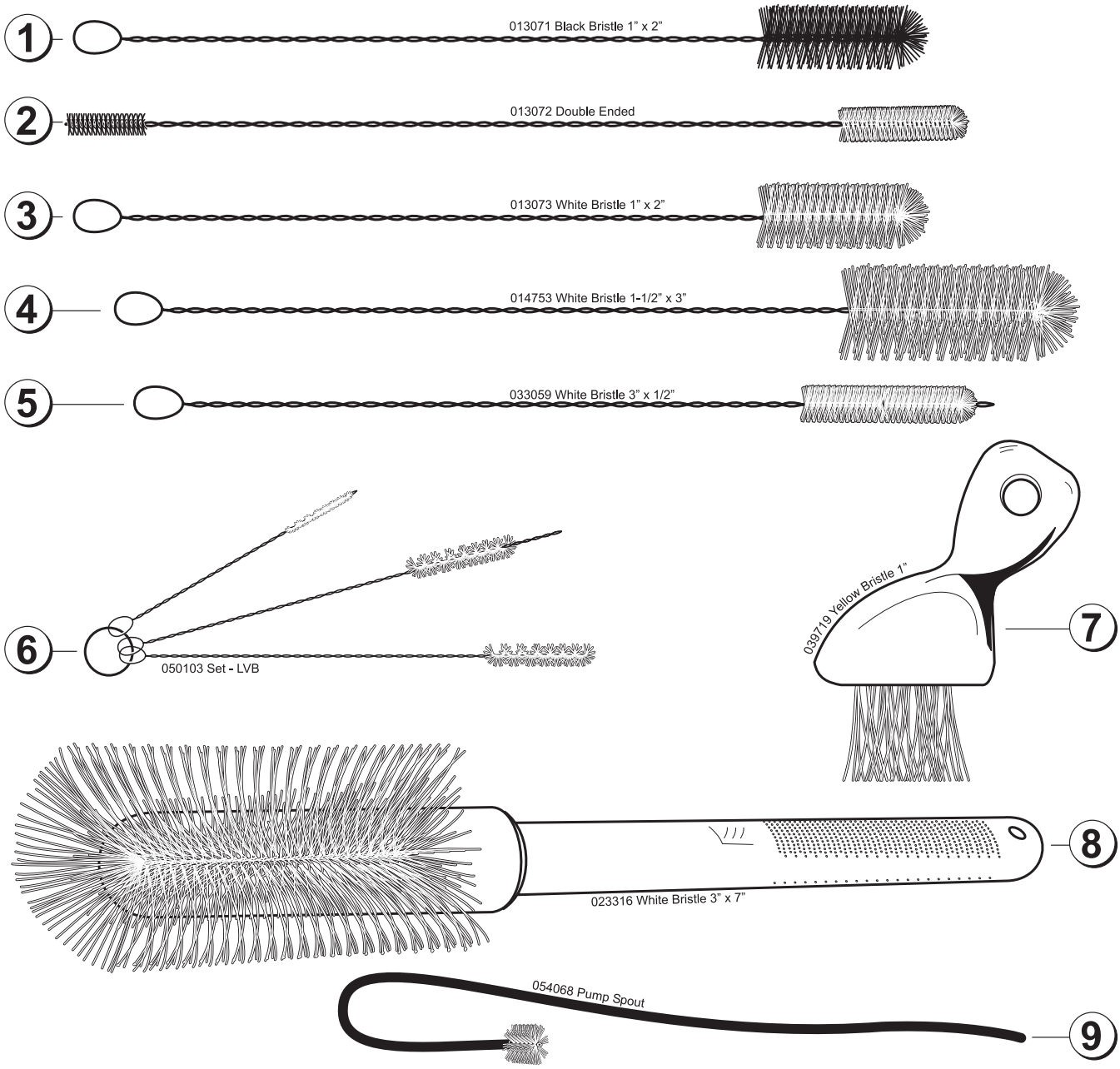

Figure 8

ITEM	DESCRIPTION	PART NO.
1	BLACK BRISTLE BRUSH	013071
2	DOUBLE END BRUSH	013072
3	WHITE BRISTLE BRUSH 1” x 2”	013073
4	WHITE BRISTLE BRUSH 1-1/2” x 3”	014753

ITEM	DESCRIPTION	PART NO.
5	WHITE BRISTLE BRUSH 1/2 x 3	033059
6	BRUSH SET (3)	050103
7	YELLOW BRISTLE BRUSH	039719
8	WHITE BRISTLE BRUSH 3” x 7”	023316
9	PUMP SPOUT BRUSH	054068

C708

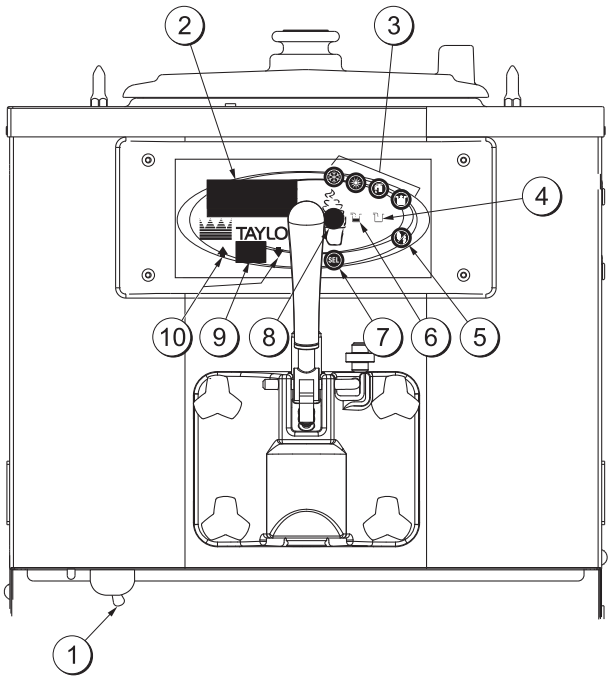

C716

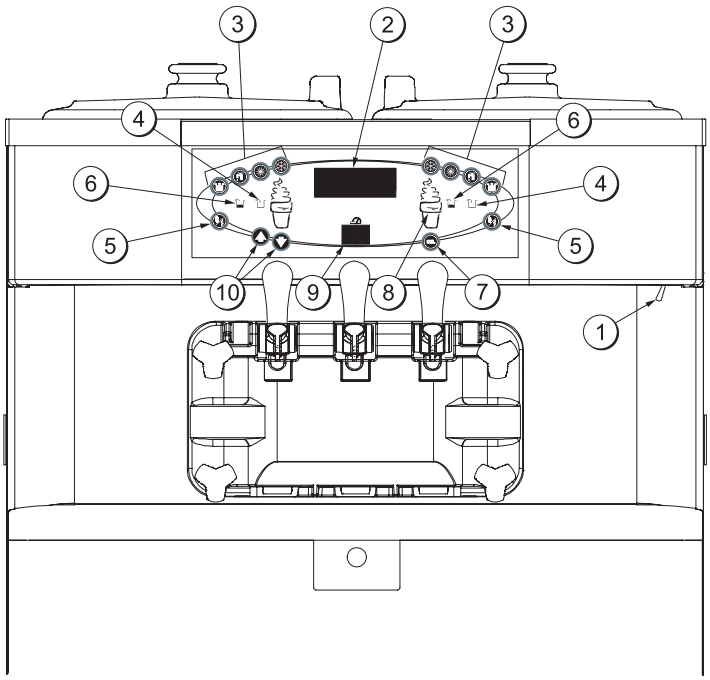

Figure 9

ITEM	DESCRIPTION
1	POWER SWITCH
2	LIQUID CRYSTAL DISPLAY
3	KEYPADS
4	MIX OUT INDICATOR
5	STANDBY INDICATOR
6	MIX LOW INDICATOR
7	SELECT KEY
8	SERVICE MENU KEY
9	BRUSH CLEAN COUNTER
10	ARROW KEY(S)

Symbol Definitions

To better communicate in the International arena, symbols have replaced words on many of our operator switches, function, and fault indicators. Your Taylor equipment is designed with these International symbols.

The following chart identifies the symbol definitions.

= SELECT

= UP ARROW

= DOWN ARROW

= AUTO

= HEAT CYCLE

= WASH

= MIX LOW

= MIX OUT

= MENU DISPLAY

= MIX PUMP

= STANDBY

050628

Power Switch

When placed in the ON position, the power switch allows control panel operation.

Fluorescent Display

The fluorescent display is located on the front control panel. During normal operation the display is blank. The display is used to show menu options and notifies the operator if a fault is detected. On International models, the display will indicate the temperature of the mix in the hopper.

Indicator Lights

MIX LOW - When the MIX LOW symbol is illuminated, the mix hopper has a low supply of mix and should be refilled as soon as possible.

MIX OUT - When the MIX OUT symbol is illuminated, the mix hopper has been almost completely exhausted and has an insufficient supply of mix to operate the freezer. At this time, the AUTO mode is locked out and the freezer will be placed in the STANDBY mode. To initiate the refrigeration system, add mix to the mix hopper and touch the AUTO symbol . The freezer will automatically begin operation.

HEAT MODE - When the HEAT MODE symbol is illuminated, the freezer is in the process of a heat cycle.

BRUSH CLEAN COUNTER - When the BRUSH CLEAN COUNTER display has counted down to “1”, the machine must be disassembled and brush cleaned within 24 hours.

Reset Mechanism

The reset button is located in the service panel on the left side of the C708. The reset buttons are located in the back panel of the C716. A reset button protects the beater motor from an overload condition. Should an overload occur, the reset mechanism will trip. To properly reset the freezer place the power switch in the OFF position. Press the reset button firmly. Turn the power switch to the ON position. Touch the WASH symbol and observe the freezer's performance.

WARNING: Do not use metal objects to press the reset button. Failure to comply may result in severe personal injury or death.

If the beater motor is turning properly, touch the WASH symbol to cancel the cycle. Touch the AUTO symbol to resume normal operation. If the freezer shuts down again, contact your authorized service technician.

Air/Mix Pump Reset Mechanism

This reset button protects the pump from an overload condition. Should an overload occur, the reset mechanism will trip. To reset the pump, press the reset button firmly.

WARNING: Do not use metal objects to press the reset button. Failure to comply may result in severe personal injury or death.

Adjustable Draw Handle

These units feature an adjustable draw handle(s) to provide the best portion control, giving a better, consistent quality to your product and controlling costs. The draw handle(s) should be adjusted to provide a flow rate of 5 to 7-1/2 oz. (142 to 213 g.) of product by weight per 10 seconds. To INCREASE the flow rate, turn the screw CLOCKWISE. To DECREASE the flow rate, turn the screw COUNTERCLOCKWISE . (See Figure 10.)

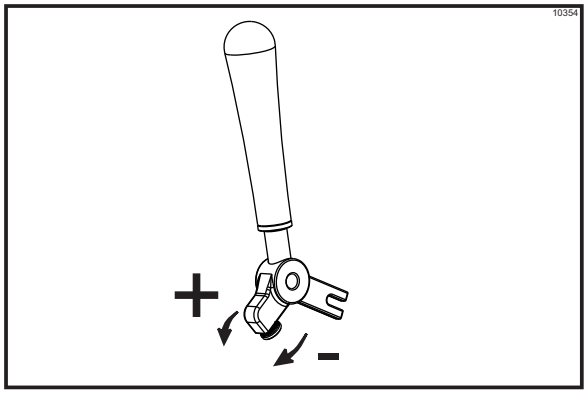

Figure 10

Operating Screen Descriptions

The fluorescent display located in the center of the control panel is normally blank during the daily operation of the machine. The display is activated when the SEL symbol or the Manager's Menu is selected. The display screen will also alert the operator of specific faults detected by the control.

Note: The displays illustrated in this section are those seen on the Models C708/C709. The Model C716/C717 versions may vary slightly.

Power Up Memory (Initializing)

The seven segment display should display “00” during the initializing sequence.

When the machine is powered, the control system will initialize to perform a system check. The screen will display “INITIALIZING”. There will be four types of data the system will check: LANGUAGE, SYSTEM DATA, CONFIG DATA, and LOCKOUT DATA.

Language Initialization

The UVC platform supports multiple languages by keeping specific strings in battery backed RAM. After power-up or a CPU reset, the strings are tested to see if the language strings are present and not corrupted. If the strings are present and not corrupted, initialization continues. Otherwise, the operator is prompted to select a language. While language strings are being checked for integrity, the following screen is displayed.

Initializing
Language

Note: If there is a language initialization fault, the machine will force a language selection prior to the initializing sequence. The standard menu LED's should light, as if it were in a menu. If a language has been selected, the unit is powered down, the machine should not ask for a language unless there is another language initialization fault. English is the factory default setting.

System Data

System data is protected separately from the rest of the data in memory. System data includes variables that change frequently such as the mode the machine is in, lockout status, serving counters, fault codes, and others. While System Data is being checked the following screen is displayed.

Initializing
System Data

If the System Data is corrupted, the machine is set to OFF, the serving counters are set to zero, and the faults are cleared. A “SYSTEM CRC ERR” fault is set and displayed on the VFD. An acknowledgement (SEL key) is required.

Configuration Data

Configuration data is separate from the rest of the data in the memory. Configuration data is information entered through operator and service menus. While Configuration Data is being checked the following screen is displayed.

Initializing
Config Data

If Configuration data is corrupted, all user and service settings are set to defaults. A “CONFIG CRC ERR” fault is set and displayed on the VFD. The system will continue to operate in its previous mode but according to default settings.

Lockout Data

Lockout data is protected separately from the rest of the data in the memory. While the Lockout Data is being checked, the following screen is displayed.

Initializing
Lockout Data

If Lockout Data is corrupted, all lockout history data is cleared. A “LOCKOUT CRC ERR” fault is displayed.

After the memory integrity has been tested, the Safety Timeout screen will be displayed.

Heat Cycle Data

Heat cycle data is checked separately from the rest of the data in memory. Each individual Heat Cycle Data record is monitored for corruption individually. At the start of a heat cycle, the next Heat Cycle data record is cleared and data for the heat cycle is written to it. The current Heat Cycle Data is displayed as the first heat cycle record in the HEAT CYCLE DATA menu option.

The heat cycle data records are checked for integrity when the record is accessed, presently only through the HEAT CYCLE DATA menu option. **(For additional Heat Cycle Data information, see page 27.)**

Once the system has initialized, the number of days until brush cleaning is required is indicated on the control panel. The SAFETY TIMEOUT screen will be displayed with the alarm on for 60 seconds or until any control symbol is touched.

SAFETY TIMEOUT
ANY KEY ABORTS

Power Switch OFF

After the safety timeout has been completed and the power switch is OFF, the following screen is displayed.

POWER SWITCH OFF
- = - = - = - = - = -
UNIT CLEANED

Power Switch ON

When the power switch is placed in the ON position, the control panel touch keys become operative. The fluorescent display will be either blank or indicate that the unit has been cleaned.

UNIT CLEANED

International Models Only:

Some International models will continuously display the temperature of the mix hopper when the power switch is in the ON position.

HOPPER 21.0

UNIT CLEANED

If the control is set for international configuration, the following screen will appear when the heat symbol is touched.

ARE YOU SURE
> Yes
No

Use the up or down arrow symbol to move the cursor to “YES”. Touch the SEL symbol to immediately start a heat cycle.

Note: The machine must be in AUTO or STANDBY and have sufficient mix in the hopper before the machine can successfully enter the HEAT mode of operation.

Heat Cycle

The HEAT symbol on the control panel is illuminated throughout the heat treatment cycle. Two warning messages will be displayed on the screen. “DO NOT DRAW” will be displayed when the mix temperature is below 130°F (54.4°C).

DO NOT DRAW

When the temperature of the mix is above 130°F (54.4°C) the screen will display a message indicating that HOT PRODUCT is in the machine.

HOT PRODUCT

DO NOT attempt to draw product or disassemble the unit during the HEAT cycle. The product is hot and under extreme pressure.

In the HEAT cycle, the mix temperature in the hopper and freezing cylinder must be raised to 151°F (66.1°C) within 90 minutes.

When the heating phase is complete, the freezer goes into the holding phase of the cycle. The holding phase will keep the temperature above 151°F (66.1°C) for a minimum of 35 minutes.

The final phase of the heat treatment cycle is the cooling phase. The freezer must cool the mix below 41°F (5°C) within 90 minutes.

When the entire heat cycle has been completed, the HEAT symbol will no longer be illuminated. The machine will enter the STANDBY mode (STANDBY symbol illuminates). The machine can be placed in AUTO or left in STANDBY.

To comply with health codes, heat treatment system freezers **must** complete a heat treatment cycle daily, and **must** be disassembled and brush cleaned a minimum of every 14 days. Brush cleaning is the normal disassembly and cleaning procedure found in the Operator Manual. Failure to follow these guidelines will cause the control to lock the freezer out of the AUTO mode.

If the Heat Treatment Cycle fails, the screen will display a failure message and return the freezer to the STANDBY mode.

Always comply with local guidelines for the maximum number of days allowed between brush clean cycles.

Freezer Locks

There are two types of freezer lock conditions that can occur: Hard Lock or Soft Lock. A Hard Lock requires the machine be disassembled and brush cleaned. A Soft Lock can be corrected by either disassembling and brush cleaning the machine, or by starting another heat treatment cycle.

Hardlock

There are two causes of a hard lock failure. The freezer will hardlock if either the Brush Clean Timer has elapsed or if a Thermistor Failure (Freezing Cylinder or Hopper) occurred during a Heat cycle.

1. The following screen will be displayed if a Brush Clean Cycle Time has occurred.

```
  BRUSH CLEAN TIMEOUT
  FREEZER LOCKED
  CLEANING REQ'D
> BRUSH CLEAN
```

Touching the SEL symbol will display the following screen.

```
FREEZER LOCKED
```

2. The following screen will display if there has been a thermistor failure (freezing cylinder or hopper) during the heat treatment process.

```
  SYSTEM FAULT
  FREEZER LOCKED
  SERVICE REQ'D
> BRUSH CLEAN
```

Touching the SEL symbol will indicate which thermistor caused the Hard Lock.

```
HOPPER THERM BAD

FREEZER LOCKED
```

If the machine has hard locked and an attempt is made to enter AUTO, the machine will enter the STANDBY mode and display the following message.

```
FREEZER LOCKED
```

To restore the message that identified the reason for the hard lock, turn the power switch OFF for five seconds and then return the power switch to the ON position. The original message with the reason for the Hard Lock will be displayed.

The FREEZER LOCKED message will remain on the display until the brush clean requirements are fulfilled. The freezer must be disassembled in order to activate the five minute timer on the display screen. Once the timer counts down to zero, the lockout is cleared.

Soft Lock

If a heat treatment cycle has not been initiated within the last 24 hours, a soft lock failure will occur. A soft lock allows the operator to correct the cause of the soft lock. The operator has the option of either starting another heat cycle or brush cleaning the machine. When a soft lock occurs, the machine will go into the STANDBY mode. The following message is displayed on the screen. The reason for the soft lock is indicated on the second line.

```
  NO HEAT CYCLE START
  REASON
> HEAT CYCLE
  BRUSH CLEAN
```

If the reason for the soft lock has been corrected, selecting HEAT CYCLE initiates a Heat Cycle immediately. Selecting BRUSH CLEAN when the previous message is displayed will hard lock the machine and brush cleaning will be necessary.

Following are the variable messages for soft lock failures that appear on the second line of the screen.

POWER SWITCH OFF	Power switch was in the OFF position.
MIX OUT PRESENT	There was a mix out condition present.
AUTO OR STANDBY OFF	The machine was not in the AUTO or STANDBY mode.
NO HEAT CYCLE TRIED	A heat treatment cycle was not attempted in the last 24 hours. (AUTO HEAT TIME was advanced or a power loss was experienced at the time the cycle was to occur.)

If the following screen appears, a soft lock has occurred during the heat treatment cycle.

```
  HEAT TREAT FAILURE
  FREEZER LOCKED
> HEAT CYCLE
  BRUSH CLEAN
```

A soft lock can also occur any time during operation when the hopper or freezing cylinder temperature rises above 59°F (15°C), the temperature rises and remains above 45°F(7°C) for more than one hour, or the temperature rises and remains above 41°F(5°C) for more than four hours.

If a PRODUCT OVER TEMPERATURE condition occurs during operation, the following screen will appear.

```
  PRODUCT OVER TEMP

> HEAT CYCLE
  BRUSH CLEAN
```

When one of these messages appears, automatic freezer operation cannot take place until the freezer is disassembled and brush cleaned, or has completed a heat treatment cycle.

Once the freezer is unlocked by starting a heat treatment cycle the HEAT symbol will illuminate and the following message will be displayed on the screen.

```
DO NOT DRAW
```

If BRUSH CLEAN is selected to clear the lockout by brush cleaning the machine, the FREEZER LOCKED message will remain on the display until the brush clean requirements are fulfilled. The freezer must be disassembled in order to activate the five minute timer on the display screen. Once the timer counts down to zero, the lockout is cleared.

```
FREEZER LOCKED
```

To restore the message that identified the reason for the soft lock, turn the power switch OFF for five seconds, and then return the power switch to the ON position. The original message with the reason for the soft lock will be displayed.

```
  HEAT TREAT FAILURE
  REASON
> HEAT CYCLE
  BRUSH CLEAN
```

Note: A record of Heat Cycle Data and Lock Out History can be found in the Manager's Menu.

Manager's Menu

The Manager's Menu is used to enter the operator function displays. To access the Menu, touch the center of the CONE symbol on the control panel. The arrow symbols, the SEL symbol and the CONE symbol will be lit when the ACCESS CODE screen is displayed.

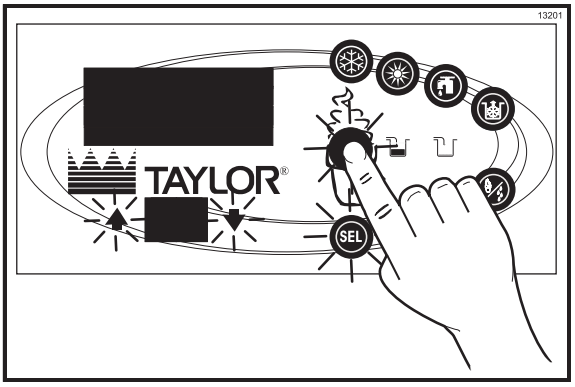

Figure 11

In the Menu program, the arrow symbols and the SEL symbol will function as menu keys.

UP ARROW - increases the value above the cursor and is used to scroll upward in text displays.

DOWN ARROW - decreases the value above the cursor and is used to scroll downward in text displays.

SEL - advances the cursor position to the right and is used to select menu options.

There is a two minute time-out in effect during the Manager's Menu. While in the Manager's Menu, if no activity occurs within a two minute period, the display will exit to the Main Menu. There is one exception to this time-out, and that is the Current Conditions Display.

Note: The machine will continue operation in the mode it was in when the Menu was selected. However, the control keys will not be lit and are non-functional when the Manager's Menu is displayed. The control keys are functional in the Manager's Menu when the CURRENT CONDITIONS screen is displayed. (See CURRENT CONDITIONS on page 28.)

Entering Access Code

With the ACCESS CODE screen on the display, use the SEL symbol to set the first code number in the cursor position. When the correct number is selected, touch the SEL symbol to move the cursor to the next number position.

ENTER ACCESS CODE

8 3 0 9

Continue to enter the proper access code numbers (8309) until all four numbers are displayed, then touch the SEL symbol. The Manager's Menu list will display on the screen, provided the correct access code is entered.

If an incorrect number is entered for the access code, the display will exit the Menu program when the SEL symbol is touched.

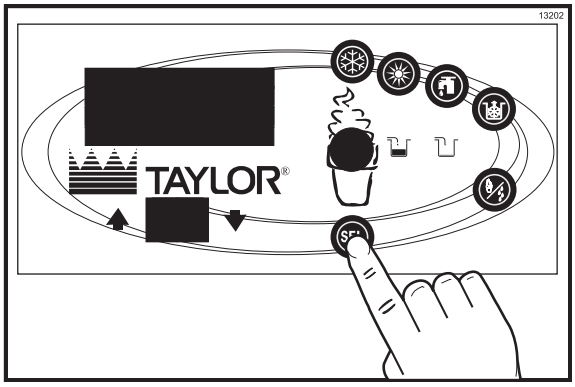

Figure 12

Manager Menu Options

Touch the ARROW symbols to move up or down through the Menu. Select a Menu option by touching the SEL symbol. Exit the Menu program by selecting EXIT FROM MENU or touch the CONE symbol.

The following menu options are listed in the Manager's Menu.

EXIT FROM MENU
RESET DRAW COUNTER
SET CLOCK
AUTO HEAT TIME

AUTO START TIME
STANDBY MODE
BRUSH CLEAN CYCLE
(C716 Only)
MIX LEVEL AUDIBLE
FAULT DESCRIPTION
LOCKOUT HISTORY
HEAT CYCLE SUMMARY
HEAT CYCLE DATA
SYSTEM INFORMATION
CURRENT CONDITIONS

Selecting “EXIT FROM MENU” will exit the Manager's Menu and the return the control panel symbols to normal operation.

The SERVING COUNTER screen is used to check or reset the number of servings dispensed from the machine. The SERVING COUNTER will automatically reset to zero when the machine is brush cleaned.

```
SERVINGS COUNTER

0
> Next
```

Reset the SERVING COUNTER by touching the SEL symbol to advance to the next screen. Touch the UP arrow symbol to move the arrow (>) to YES and touch the SEL symbol. The servings counter will reset to zero and exit back to the Manager's Menu.

```
RESET DRAW COUNTER

  Yes
> No
```

The SET CLOCK option allows the Manager to adjust the control clock date and time. The date and time may only be changed after the freezer has been manually cleaned but before it has been placed in the AUTO or STANDBY mode. The following message will be displayed if the SET CLOCK option is selected when the machine is not in a brush clean state.

```
SET CLOCK
12:01          2/21/2004
          NO CHANGES ALLOWED
Press Any Key
```

To change the date or time, select the SET CLOCK option in the menu. Touch the UP arrow symbol to advance the arrow from Exit to Change, then touch the SEL symbol to select the Change option.

```
SET CLOCK
12:01          2/21/2004
  Change
> Exit
```

Change the time by touching the UP arrow with the cursor under the hour position. Move the cursor to the minutes position by touching the SEL symbol. Once the correct minutes are entered, touch the SEL symbol to advance the cursor to the month.

```
SET CLOCK
12:01          2/21/2004

> Exit
```

Enter the correct month, day, and year. Then touch the SEL symbol to advance to the DAYLIGHT SAVING TIME screen.

```
DAYLIGHT SAVING TIME
      ENABLED
>   Enable
    Disable
```

The Daylight Saving feature, when enabled, will automatically adjust the control clock for daylight saving time. To disable the Daylight Saving Time feature, touch the DOWN arrow to move the arrow to “Disable”. Then touch the SEL symbol to save the new setting.

The AUTO HEAT TIME screen allows the Manager to set the time of day in which the heat treatment cycle will start.

```
AUTO HEAT TIME
00:00
  Change
> Exit
```

To set the AUTO HEAT TIME, touch the UP arrow symbol to move the arrow to “Change”. Then touch the SEL symbol. The screen will display the time with the cursor under the hour position.

```
AUTO HEAT TIME
00:00
```

Touch the arrow symbols to increase or decrease the hour to the desired setting. Then move the cursor to the minutes position by touching the SEL symbol. Adjust the setting for minutes. Then touch the SEL symbol to save the setting and return to the AUTO HEAT TIME screen. Touch the SEL symbol to exit the screen and return to the Menu.

The AUTO START TIME option allows the Manager to set the time of day at which the machine automatically enters the AUTO mode from the STANDBY mode. The machine must be in the STANDBY mode without a freezer lock condition in order to AUTO start at the programmable time. The AUTO START TIME can also be Disabled and require starting the AUTO mode manually.

```
AUTO START TIME
DISABLED
  Enable
> Disable
```

Enable the AUTO START TIME by touching the UP arrow symbol to move the arrow up to Enable. Touch the SEL symbol to advance to the next screen.

```
AUTO START TIME
00:00
  Change
> Exit
```

Program the AUTO START TIME by touching the UP arrow symbol to move the arrow to “Change”. Touch the SEL symbol to advance to the next screen.

```
AUTO START TIME
00:00
```

Use the arrow symbols to program the AUTO START TIME by increasing or decreasing the hour setting above the cursor. Touch the SEL symbol to advance the cursor and program the minutes setting. Touch the SEL symbol to return to the previous screen with the new time setting displayed. Touch the SEL symbol to exit the screen and return to the Menu.

The STANDBY option is used to manually place the machine in the standby mode during long, no draw periods. Select the STANDBY screen from the Manager's Menu. Touch the SEL symbol to activate Standby. Standby may also be entered by touching the STANDBY key when not in the Manager's Menu.

Discontinue Standby operation by exiting the Manager's Menu and select the AUTO mode.

```
STANDBY MODE

> EXIT
```

The BRUSH CLEAN CYCLE option allows the Manager to select the maximum number of days between brush cleaning the Model C716 . The brush clean cycle may only be changed after the freezer has been manually cleaned, but before it has been placed in the AUTO or STANDBY mode.

Note: This option can only be accessed through the Service Menu for the C708.

The following message will be displayed if the BRUSH CLEAN CYCLE option is selected when the machine is not in a brush clean state.

BRUSH CLEAN CYCLE
No Changes Allowed

Press Any Key

Figure 13

Change the number of days between brush clean intervals by using the arrow symbols. Touch the SEL symbol to save the setting and exit back to the Menu. The number of days displayed on the brush clean counter will change to the new setting.

BRUSH CLEAN CYCLE
TIME 14 DAYS

Figure 14

Always comply with local guidelines on the number of days allowed between brush clean cycles.

The MIX LEVEL AUDIBLE option, when enabled, will alert the operator with an audible tone when there is Mix Low or Mix Out condition. The following screen is displayed upon selecting this option.

MIX LEVEL AUDIBLE

> Enable
Disable

Disable the audible tone feature by touching the DOWN arrow symbol to move the arrow to “Disable”. Touch the SEL symbol to save the new setting and return to the Menu. The control panel icons for Mix Low and Mix Out will illuminate as the mix level drops in the hopper, but the audible tone will be disabled.

The FAULT DESCRIPTION display will indicate if there is a fault with the freezer and where the fault occurred. When no faults are detected, the following screen will be displayed.

FAULT DESCRIPTION
NO FAULT FOUND

Touch the SEL symbol to display the next fault found or return to the Menu if no other faults exist. Touching the SEL symbol any time faults are displayed will clear the faults, if corrected, upon returning to the Menu screen.

Listed below are the variable messages which will appear, along with an explanation for the corrective action.

NO FAULT FOUND - There was no fault found in the freezer. Nothing will appear on the screen after this variable message appears.

BEATER OVERLOAD - Place the power switch in the OFF position. Press the beater reset button firmly. Place the power switch in the ON position and restart in AUTO.

HPCO COMPRESSOR - Place the power switch in the OFF position. Wait 5 minutes for the machine to cool. Place the power switch in the ON position and restart in AUTO.

HOPPER THERMISTOR BAD* - Place the power switch in the OFF position. Replace the hopper thermistor probe.

BARREL THERMISTOR BAD* - Place the power switch in the OFF position. Replace the barrel thermistor probe.

***Note:** Three codes have been set up to assist in diagnosing bad thermistor probes. If a probe has shorted (resistance less than 1 ohm), “SHRT” will be displayed on the screen for its respective machine location. If the probe is open (resistance above 1 megohm), “OPEN” will be displayed. If the actual probe environment exceeds 200 °F (93°C), the respective screen display location will read “OVER” indicating the temperature is “out of range”.

COMP ON TOO LONG - The compressor run time exceeded the 11 minute timer.

The LOCKOUT HISTORY screen displays a history of the last 40 soft locks, hard locks, brush clean dates, or aborted heat cycles. Page numbers are indicated in the upper right hand corner. Page 1 always contains the most recent failure.

```
                    LOCKOUT HISTORY          1
        00/00/00                    00:00
                      Reason
> Exit
```

The second line of the screen displays the date and time a failure occurs. The third line indicates the reason for a failure, or will indicate if a successful brush cleaning has occurred. Some failures occur with multiple reasons. When this occurs, a page will be generated for each reason.

Use the arrow symbols to advance forward or move backward to view each screen. Listed below are the variable messages that may appear.

Faults Occurring Entering a Heat Treatment Cycle

POWER SWITCH OFF - The power switch is OFF.

AUTO OR STBY OFF - The control was not in the AUTO or STANDBY mode.

MIX OUT FAILURE - A Mix Out condition was present.

NO HEAT CYCLE TRIED - The Auto Heat Time was set to attempt a heat cycle more than 24 hours after the last successful heat cycle.

Faults Occurring While in Heat Mode

HEAT MODE FAILURE - The maximum allowable heat mode time exceeded 90 minutes.

COOL MODE FAILURE - The maximum allowable cool mode time exceeded 90 minutes.

TOTAL TIME FAILURE - The maximum allowable total heat treatment time exceeded 4 hours.

BRUSH CLEAN TIMEOUT - The total days in operation exceeded the brush clean cycle setting.

POWER SWITCH OFF - The power switch was turned OFF during the heat cycle.

POWER FAIL IN H/C - A power failure occurred during the heat treatment cycle.

MIX LOW FAILURE - The mix level in the hopper is too low for a successful heat cycle.

BEATER OVLD H/C - The overload tripped for the beater motor.

BRL THERM FAIL - The thermistor sensor for the freezing cylinder failed.

HOPPER THERM FAIL - The thermistor sensor for the hopper failed.

HPCO H/C - The high pressure switch opened during the heat treatment cycle.

Faults Occurring While in AUTO Mode

(L/R) HPR>41F (5C) AFTER 4 HR - The mix temperature in the hopper was above 41°F (5°C) more than four hours.

(L/R) BRL>41F (5C) AFTER 4 HR - The mix temperature in the freezing cylinder was above 41°F (5°C) more than four hours.

(L/R) HPR>41F (5C) AFTER PF - The mix temperature in the hopper was above 41°F (5°C) more than four hours following a power failure.

(L/R) BRL>41F (5C) AFTER PF - The mix temperature in the freezing cylinder was above 41°F (5°C) more than four hours following a power failure.

(L/R) HPR>45F (7C) AFTER 1 HR - The mix temperature in the left or right hopper was above 45°F (7°C) more than one hour.

(L/R) BRL>45F (7C) AFTER 1 HR - The mix temperature in the left or right barrel was above 45°F (7°C) more than one hour.

(L/R) HPR>59F (15C) - The mix temperature in the hopper exceeded 59°F (15°C).

(L/R) BRL>59F (15C) - The mix temperature in the hopper exceeded 59°F (15°C).

The HEAT CYCLE SUMMARY screen displays the hours since the last heat cycle, the hours since the product temperature was above 150°F (65.6°C), and the number of heat cycles completed since the last brush clean date.

```
HEAT CYCLE SUMMARY
HRS SINCE HC                    0
HRS SINCE 150                   0
HC SINCE BC                     0
```

The HEAT CYCLE DATA screen contains a record of up to 366 heat treatment cycles. The most recent heat cycle data will be shown first.

Each heat cycle record has three screens. The first screen displays the month and day of the heat cycle, the start time and end time, and the fault description. The bottom line displays the record number and indicates if a power failure occurred during the heat cycle (POWER FAILURE IN HC).

```
          HEAT TREAT CYCLE
01/01        02:00          05:14
          NO FAULT FOUND
                                  1
```

Touch the UP arrow symbol to advance forward through the data pages. Touch the DOWN arrow symbol to reverse the page direction.

Hopper and barrel temperature records for each side of the freezer are displayed in the second and third screens. The second screen shows the left side (L) side of the freezer.

The third screen shows the right side (R) of the freezer.

The top line of these screens shows the hopper (H) and barrel (B) temperatures recorded at the end of the Heat Treat Cycle and indicates the side (L or R) of the freezer.

The remaining lines indicate the following:

HEAT = Total time for the hopper (h) and barrel (b) to reach 150.9°F (66.1°C).

OVER = Total time the hopper (h) and barrel (b) temperature was above 150°F (65.6°C).

COOL = Total time the hopper (h) and barrel (b) temperature was above 41°F (5°C) during the COOL phase.

PEAK = Highest temperature reading for the hopper (h) and barrel (b) during the Heat Treatment Cycle.

```
H: 40.9          B:26.3                L
HEAT   OVER      COOL   PEAK
1:12   0:49   h  1:19   161.0
0:46   1:11   b  0:15   169.7
```

```
H: 38.0          B:23.7                R
HEAT   OVER      COOL   PEAK
1:09   0:52   h  1:11   161.2
0:66   1:00   b  0:11   169.9
```

The HEAT time indicates the amount of time taken in each zone to reach 150.9°F (66.1°C). Each zone must remain above 150°F (65.6°C) for a minimum of 35 minutes.

Touch the UP arrow symbol to advance to the next page or the DOWN arrow symbol to view the previous page. A Heat Cycle Failure message will display on the first screen if a failure occurred.

Listed below are variable failure code messages which could appear on line 2.

HT HEAT TIME FAILURE
Mix temperature did not rise above 151°F (66.1°C) in less than 90 minutes.

CL COOL MODE FAILURE
Mix temperature in the hopper and freezing cylinder did not fall below 41°F (5°C) in less than 90 minutes.

TT TOTAL TIME FAILURE
The heat treatment cycle must be completed in no more than 4 hours.

ML MIX LOW FAILURE
The Heat Phase or Cool Phase time was exceeded and a mix low condition was present.

MO MIX OUT FAILURE
A mix out condition was detected at the start or during the heat cycle.

BO BEATER OLVD IN HC
A beater overload occurred during the heat cycle.

HO HPCO IN HEAT CYCLE
A high pressure cut-out condition occurred during the heat cycle.

PF POWER FAILURE IN HC
A power failure caused the Heat Phase, Cool Phase, or Total Cycle Time to exceed the maximum allowed time. If a power failure occurs, but the heat treatment cycle does not fail, an asterisk(*) will appear on the third line of the display.

OP OPERATOR INTERRUPT
Indicates the heat cycle was aborted in the OPERATOR INTERRUPT option in the Service Menu.

PS POWER SWITCH OFF
The power switch was placed into the OFF position during the heat cycle.

TH THERMISTOR FAILURE
A thermistor probe has failed.

PD PRODUCT DOOR OFF
A product door is not in place or is loose.

The SYSTEM INFORMATION is displayed on three separate screens. The first screen contains the control and software version installed in the machine.

```
SOFTWARE VERSION
C708 CONTROL UVC3
VERSION 1.07
> Next
```

Touch the SEL symbol to advance to the next system information screen containing the software language version.

```
Language
V2.00    English 621

> Next
```

Touch the SEL symbol to advance to the third system information screen containing the model bill of material and machine serial number. Touching the SEL symbol again will return to the Menu list.

```
B.O.M.  C70827C000
S/N     K0000000

> Next
```

The CURRENT CONDITIONS screen provides the viscosity readings for the product when the machine is running, and the hopper and the freezing cylinder temperatures for the machine.

```
VISC        0.0
HOPPER     41.0
```

CURRENT CONDITIONS is the only Menu screen that will return the control panel keys to normal operation. The Menu symbols will not be lit when this option is selected but the panel touch keys are fully functional. Exit the CURRENT CONDITIONS screen and return to the Menu by touching the SEL symbol.

Section 6 Operating Procedures

The C708 stores mix in a hopper and has a 3.4 quart (3.2 liter) capacity freezing cylinder with a single spout door. The C716 stores mix in two hoppers and has two 3.4 quart (3.2 liter) capacity freezing cylinders with a three spout door.

The Model C708 has been selected to illustrate the step-by-step operating procedures. Duplicate the procedures, where they apply, for the second freezing cylinder on the Model C716.

We begin our instructions at the point where we enter the store in the morning and find the parts disassembled and laid out to air dry from the previous night's cleaning.

These opening procedures will show you how to assemble these parts into the freezer, sanitize them, and prime the freezer with fresh mix in preparation to serve your first portion.

If you are disassembling the machine for the first time or need information to get to this starting point in our instructions, turn to page 44, “Disassembly”, and start there.

Freezing Cylinder Assembly

Note: When lubricating parts, use an approved food grade lubricant (example: Taylor Lube).

MAKE SURE THE POWER SWITCH IS IN THE “OFF” POSITION! Failure to follow this instruction may result in severe personal injury from hazardous moving parts.

Step 1
Before installing the beater drive shaft, lubricate the groove on the beater drive shaft.

Step 2
Slide the beater drive shaft boot seal over the small end of the beater drive shaft and engage into the groove on the shaft.

Step 3
Heavily lubricate the inside portion of the boot seal and also lubricate the flat end of the boot seal that comes in contact with the rear shell bearing.

Step 4
Apply an even coat of lubricant to the shaft. DO NOT lubricate the hex end. (See Figure 15.)

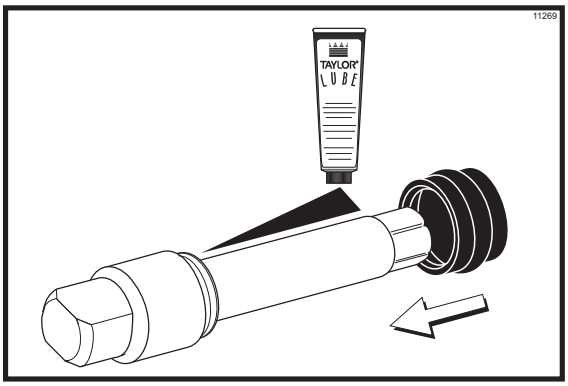

Figure 15

Note: To ensure the mix does not leak out of the back of the freezing cylinder, the middle section of the boot seal should be convex or extend out from the seal. If the middle section of the boot seal is concave or extending into the middle of the seal, turn the seal inside out.

Step 5
Insert the beater drive shaft through the rear shell bearing in the freezing cylinder and engage the hex end firmly into the drive coupling. (See Figure 16.)

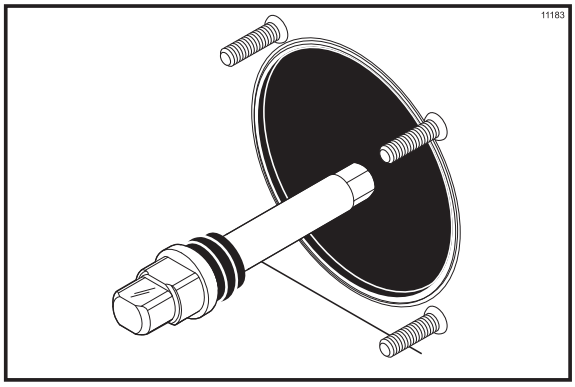

Figure 16

USE EXTREME CAUTION when handling the beater assembly. The scraper blades are very sharp and may cause injury.

Step 6
Before installing the beater assembly, check the scraper blades for any nicks or signs of wear. If any nicks are present, or if the blades are worn, replace both blades.

If the blades are in good condition, install the scraper blade clips over the scraper blades. Place the rear scraper blade over the rear holding pin on the beater. (See Figure 17.)

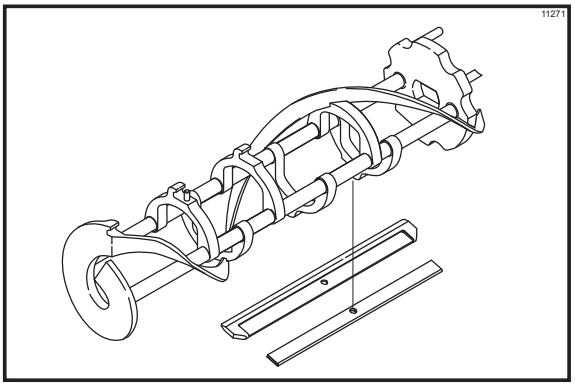

Figure 17

Note: Scraper blades should be replaced every 3 months.

Note: The hole on the scraper blade must fit securely over the pin to prevent costly damage.

Step 7
Holding the rear blade on the beater, slide it into the freezing cylinder halfway. Install the front scraper blade over the front holding pin. (See Figure 18.)

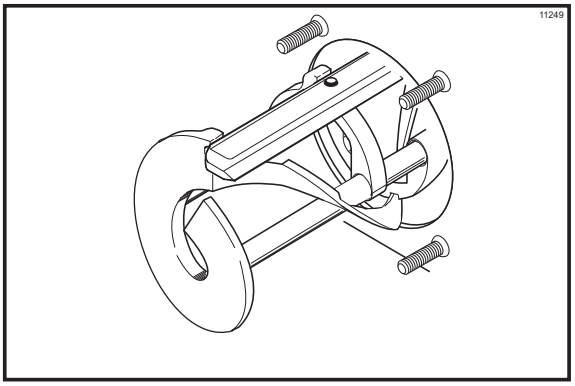

Figure 18

Step 8
Install the beater shoes. (See Figure 19.)

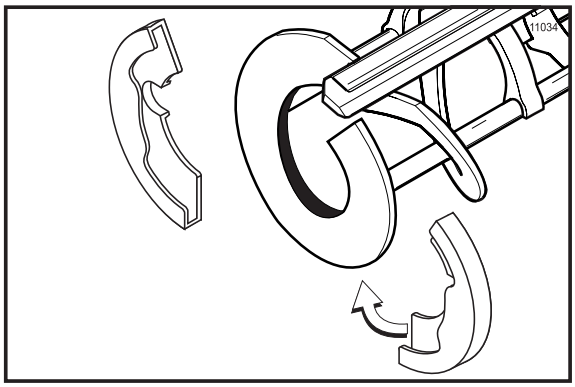

Figure 19

Step 9
Slide the beater assembly the rest of the way into the freezing cylinder.

Make sure the beater assembly is in position over the drive shaft by turning the beater slightly until the beater is properly seated. When in position, the beater will not protrude beyond the front of the freezing cylinder. (See Figure 20.)

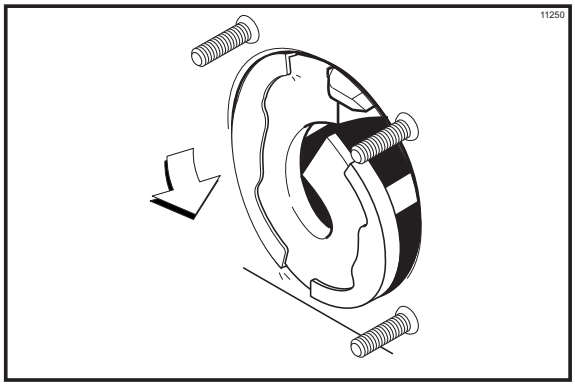

Figure 20

Repeat these steps for the other side of the Model C716.

Freezer Door Assembly

The assembly of the C708 freezer door is different from the C716 freezer door. Please follow the appropriate instructions for your machine.

Model C708 Freezer Door Assembly

Step 1
Place the door gasket into the groove on the back of the freezer door. Slide the front bearing over the baffle rod so the flanged edge is against the door. **DO NOT lubricate the gasket or bearing.** (See Figure 21.)

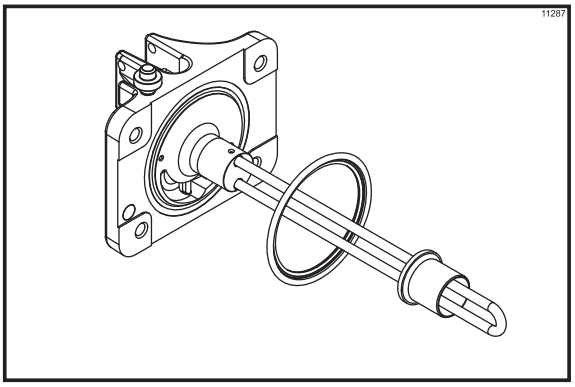

Figure 21

Step 2
Slide the three o-rings into the grooves on the draw valve and lubricate. (See Figure 22.)

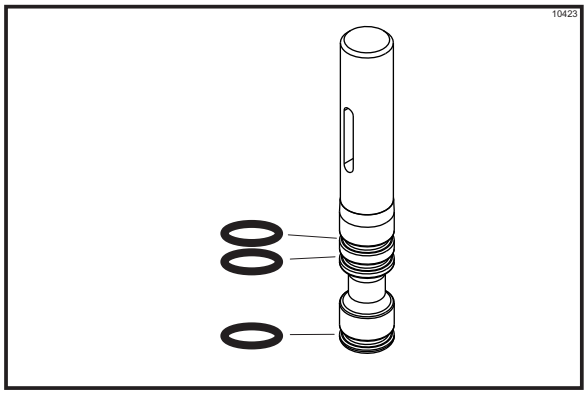

Figure 22

Step 3
Lightly lubricate the inside of the top of the freezer door valve cavity. (See Figure 23.)

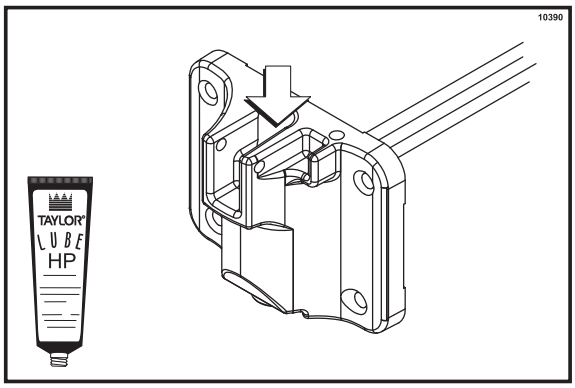

Figure 23

Step 4
Insert the draw valve from the top, with the draw handle slot facing forward. (See Figure 24.)

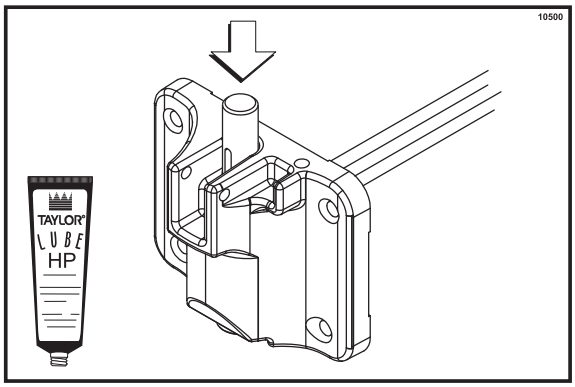

Figure 24

Model C708 Freezer Door Assembly *(Cont'd.)*

Step 5
Insert the baffle rod through the beater in the freezing cylinder. With the door seated on the freezer studs, install the handscrews, with the longer ones on top. Tighten equally in a criss-cross pattern to insure the door is snug. (See Figure 25.)

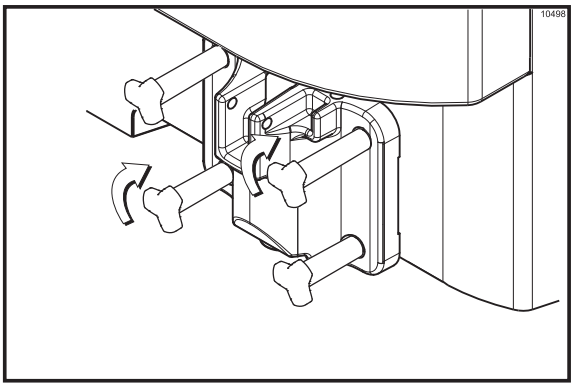

Figure 25

Step 6
Slide the fork of the draw handle into the slot of the draw valve. Secure with pivot pin. (See Figure 26.)

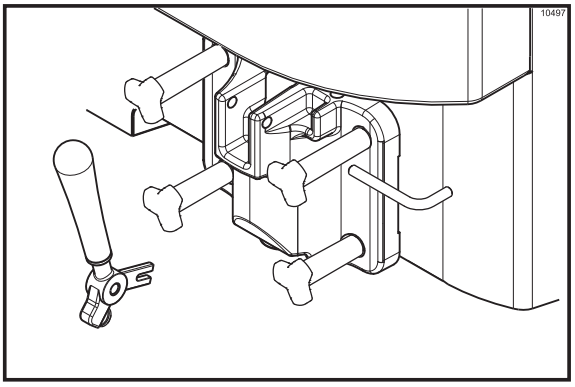

Figure 26

Note: The C708 features an adjustable draw handle to provide portion control, giving a better consistent quality to your product and controlling costs.

The draw handle should be adjusted to provide a flow rate of 5 to 7-1/2 oz. (142 g. to 213 g.) of product by weight per 10 seconds. To INCREASE the flow rate, turn the adjustment screw CLOCKWISE. Turn the adjustment screw COUNTER-CLOCKWISE to DECREASE the flow rate.

Step 7
Slide the two drip pans into the holes in the left and rear panels. (See Figure 31.)

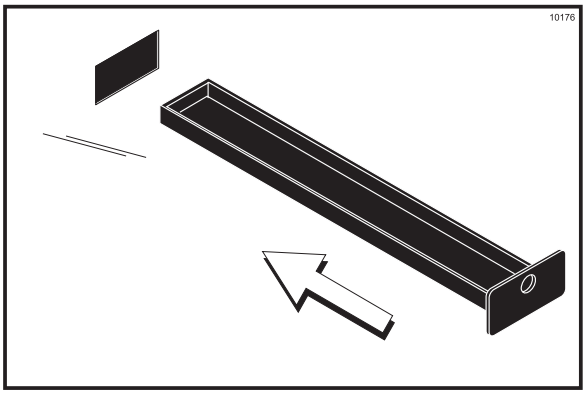

Figure 27

Step 8
Install the front drip tray and splash shield under the door spout. (See Figure 32.)

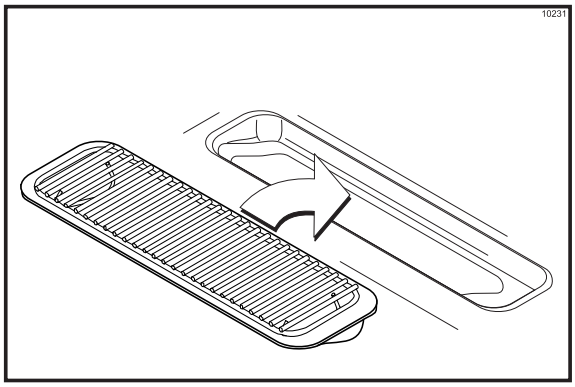

Figure 28

Model C716 Freezer Door Assembly

Step 1
Place the door gaskets into the grooves on the back of the freezer door.

Step 2
Slide the front bearings over the baffle rods. The flanged edges should be against the door. **DO NOT lubricate the gaskets or bearings.**

Step 3
Insert the baffle rods through the beaters in the freezing cylinders. With the door seated on the freezer studs, install the handscrews, with the longer ones on top. Tighten equally in a criss-cross pattern to insure the door is snug.

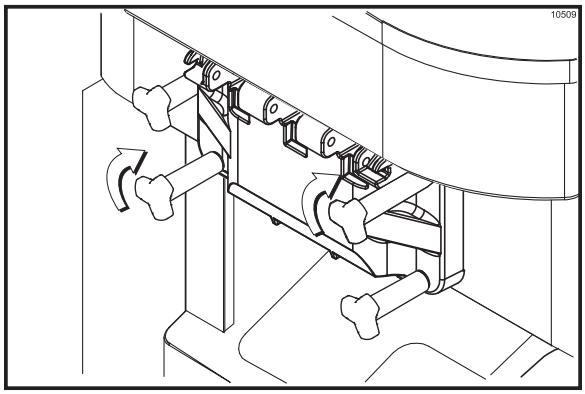

Figure 29

Step 4
Slide the three o-rings into the grooves of each standard draw valve. Slide the H-ring and o-ring into the grooves of the center draw valve. Lubricate the H-ring and o-rings.

Step 5
Lubricate the inside of the freezer door spouts, top and bottom.

Step 6
Insert the draw valves from the bottom until the slot in each draw valve comes into view.

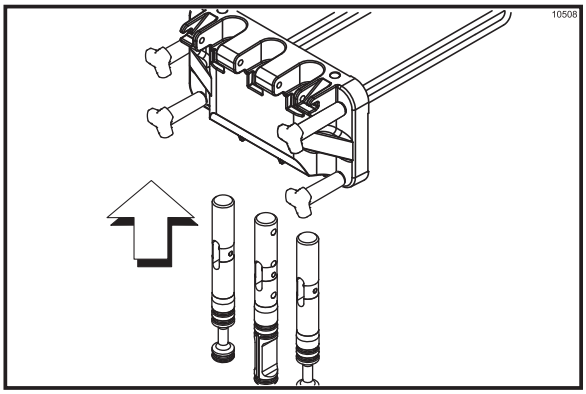

Figure 30

Step 7
Position each draw handle with the adjustment screw facing down. Slide the fork of each draw handle into the slot of each draw valve, starting from the right.

Step 8
Slide the pivot pin through the draw handles as the handles are inserted into the draw valves

Note: This freezer features adjustable draw handles to provide portion control, giving a better consistent quality to your product and controlling costs. The draw handles should be adjusted to provide a flow rate of 5 to 7-1/2 oz. (142 g. to 213 g.) of product by weight per 10 seconds.

To INCREASE the flow rate, turn the adjustment screw CLOCKWISE. To DECREASE the flow rate, turn the adjustment screw COUNTER-CLOCKWISE.

Step 9
Snap the design caps over the bottom of the door spouts.

Step 10
Slide the two rear drip trays into the holes in the back panel. Slide the two drip pans into the holes in the side panels. (See Figure 31.)

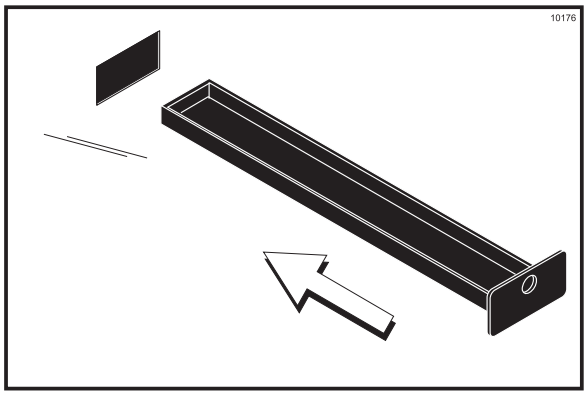

Figure 31

Step 11
Install the front drip tray and splash shield under the door spouts. (See Figure 32.)

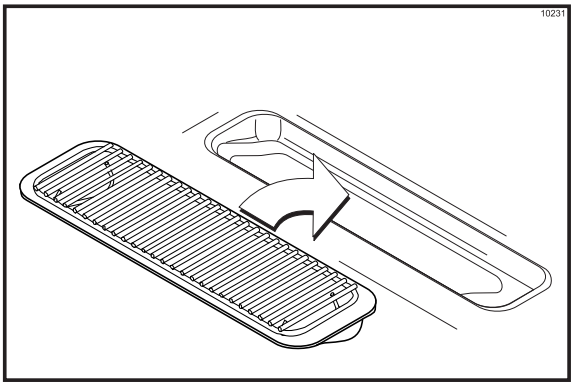

Figure 32

Mix Pump Assembly

Step 1
Inspect the rubber pump parts. O-rings and gasket must be in 100% good condition for the pump and entire machine to operate properly. The o-rings and gasket cannot properly serve their intended function if nicks, cuts, or holes in the material are present.

Replace any defective parts immediately and discard the old.

Step 2
Assemble the piston. Slide the red o-ring into the groove of the piston. DO NOT lubricate the o-ring. (See Figure 33.)

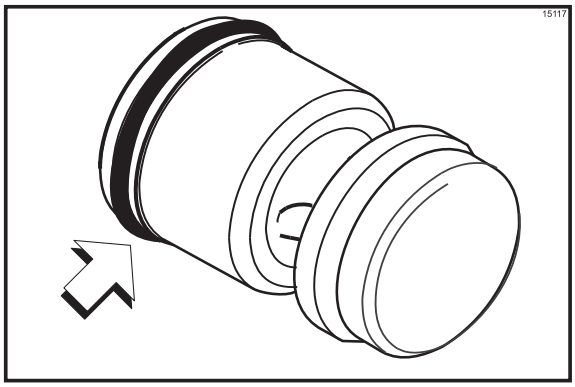

Figure 33

Step 3
Apply a thin layer of lubricant to the inside of the pump cylinder at the retaining pin hole end. (See Figure 34.)

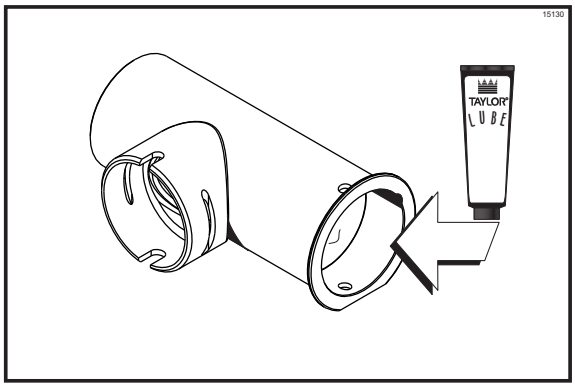

Figure 34

Step 4
Insert the piston into the retaining pin hole end of the pump cylinder. (See Figure 35.)

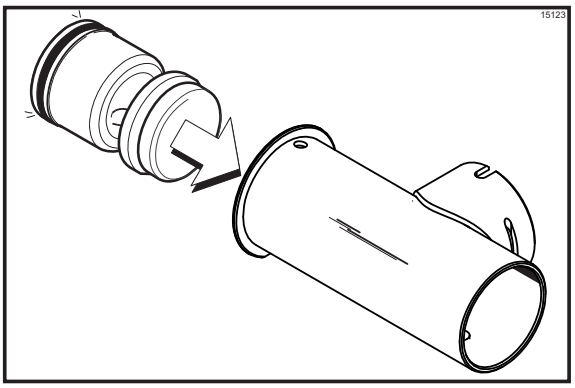

Figure 35

Step 5
Assemble the valve cap. Slide the o-ring into the groove of the valve cap. DO NOT lubricate the o-ring. (See Figure 36.)

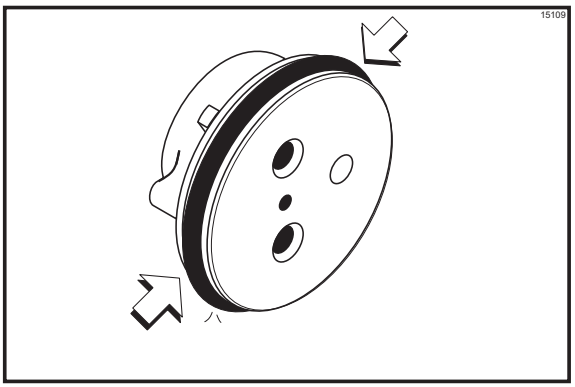

Figure 36

Step 6
Slide the pump valve gasket into the holes on the cap. DO NOT lubricate the gasket. (See Figure 37.)

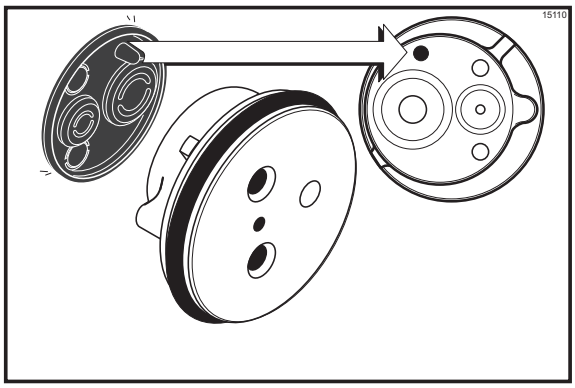

Figure 37

Step 7
Insert the valve body cap into the hole in the mix inlet adapter. (See Figure 38.)

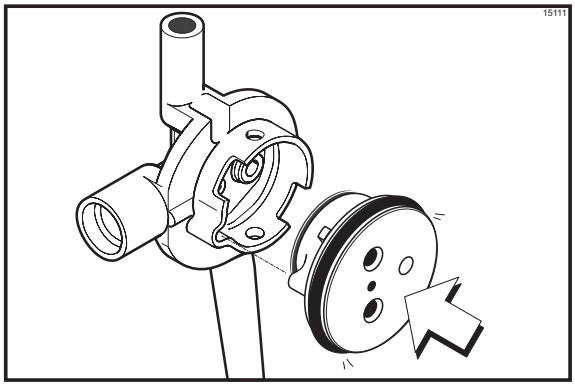

Figure 38

Step 8
Insert the mix inlet assembly into the pump cylinder. (See Figure 39.)

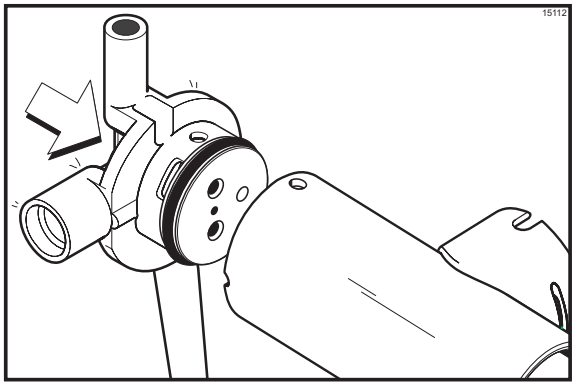

Figure 39

The adapter must be positioned into the notch located at the end of the pump cylinder.

Step 9
Secure the pump parts in position by sliding the retaining pin through the cross holes located at one end of the pump cylinder. (See Figure 40.)

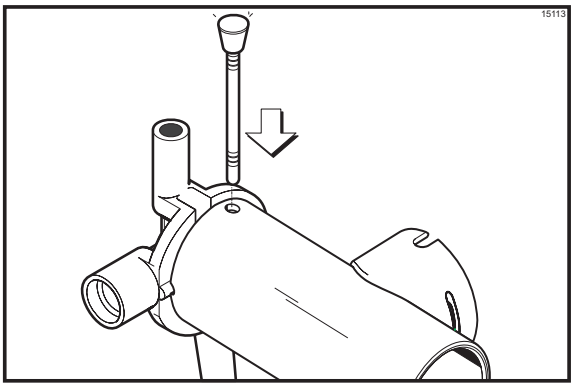

Figure 40

Note: The head of the retaining pin should located at the top of the pump when installed.

Step 10
Assemble the feed tube assembly. Slide the check ring into the groove of the feed tube.
(See Figure 41.)

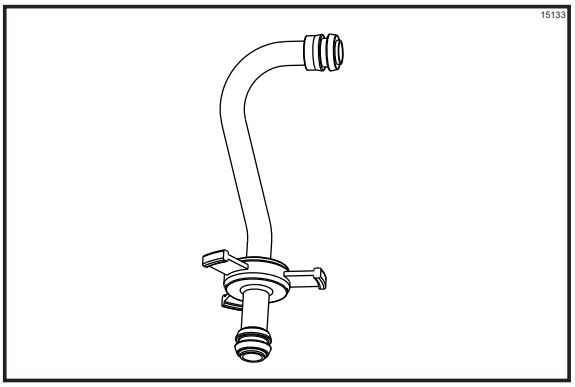

Figure 41

Step 11
Install one red o-ring on each end of the mix feed tube, and thoroughly lubricate. (See Figure 42.)

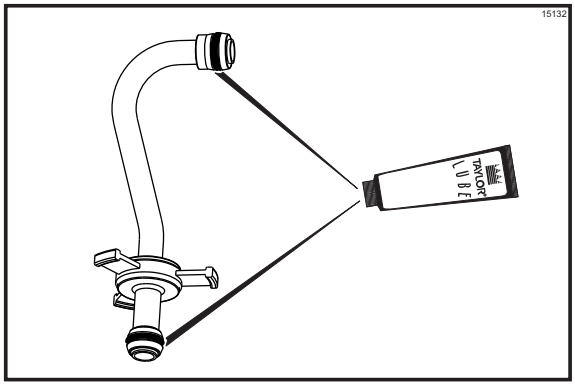

Figure 42

Step 12
Lay the pump assembly, pump clip, cotter pin and agitator in the bottom of the mix hopper for sanitizing. (See Figure 43.)

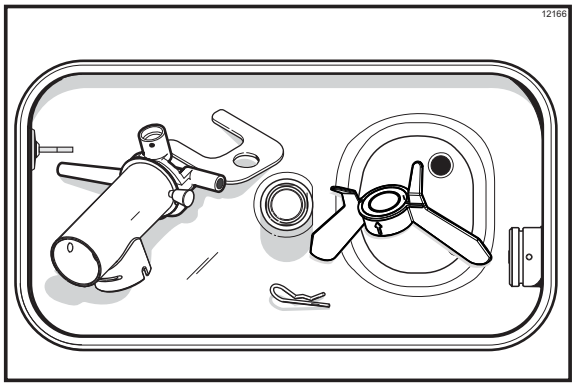

Figure 43

Step 13
Slide the large black o-ring and the two smaller black o-rings into the grooves on the drive shaft. Thoroughly lubricate the o-rings and shaft. DO NOT lubricate the hex end of the shaft. (See Figure 44.)

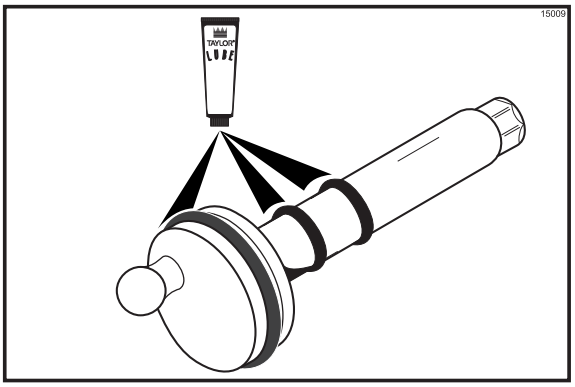

Figure 44

Step 14
Install the hex end of the drive shaft into the drive hub at the rear wall of the mix hopper.
(See Figure 45.)

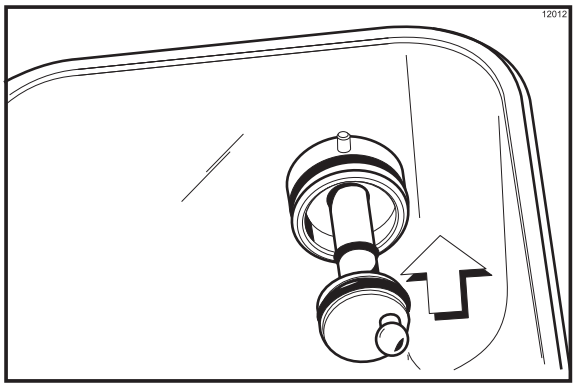

Figure 45

Note: For ease in installing the pump, position the ball crank of the drive shaft in the 3 o'clock position.

Repeat these steps for the other side of the Model C716.

Sanitizing

Step 1
Prepare an approved 100 PPM sanitizing solution (examples: 2-1/2 gal. [9.5 liters] of Kay-5® or 2 gal. [7.6 liters] of Stera-Sheen®). USE WARM WATER AND FOLLOW THE MANUFACTURER'S SPECIFICATIONS.

Step 2
Pour the sanitizing solution over all the parts in the bottom of the mix hopper and allow it to flow into the freezing cylinder. (See Figure 46.)

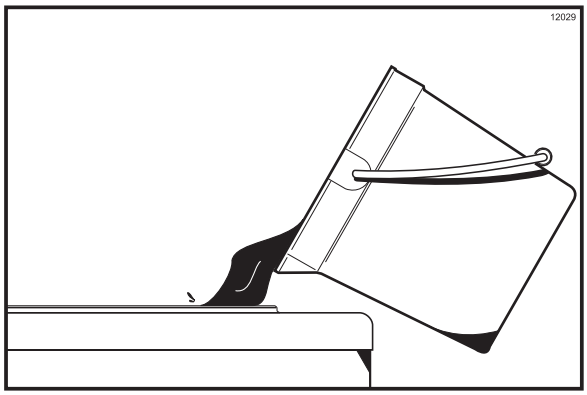

Figure 46

Note: You have just sanitized the mix hopper and parts; therefore, be sure your hands are clean and sanitized before going on in these instructions.

Step 3
While the solution is flowing into the freezing cylinder, take particular care to brush-clean the mix level sensing probe on the bottom of the hopper, the mix hopper, the mix inlet hole, the air/mix pump, the pump clip, the mix feed tube, and the locking clip.

Step 4
Install the pump assembly at the rear of the mix hopper. To position the pump on the drive hub, align the drive hole in the piston with the drive crank of the drive shaft. Secure the pump in place by slipping the pump clip over the collar of the pump, making sure the clip fits into the grooves in the collar. (See Figure 47.)

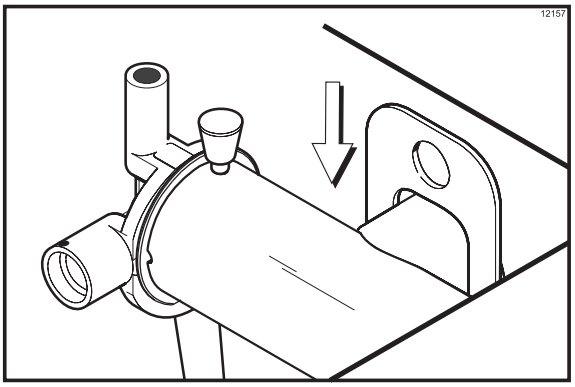

Figure 47

Step 5

Install the pump end of the mix feed tube and secure with the cotter pin. Failure to follow this instruction could result in sanitizer spraying on the operator. (See Figure 48.)

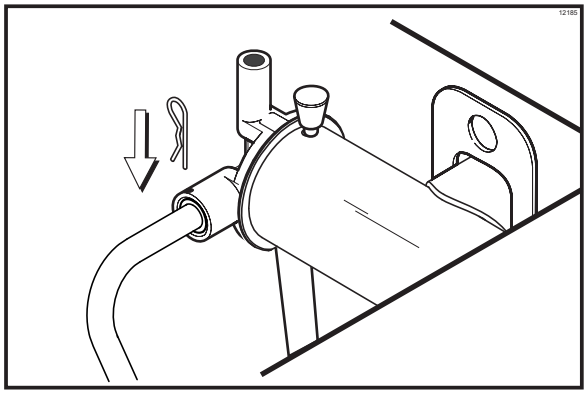

Figure 48

Step 6
Prepare another pail of approved 100 PPM sanitizing solution (examples: 2-1/2 gal. [9.5 liters] of Kay-5® or 2 gal. [7.6 liters] of Stera-Sheen®). USE WARM WATER AND FOLLOW THE MANUFACTURER'S SPECIFICATIONS.

Step 7
Pour the sanitizing solution into the mix hopper.

Step 8
Brush the exposed sides of the hopper.

Step 9
Place the power switch in the ON position.

Step 10
Touch the WASH symbol . This will cause the sanitizing solution in the freezing cylinder to be agitated. Wait at least 5 minutes before proceeding with these instructions.

Step 11
With a pail beneath the door spout(s), open the draw valve and touch the PUMP symbol . Open and close the draw valve 6 times.

Note: Momentarily open the center draw valve to sanitize the center door spout (C716 only).

Draw off the remaining sanitizing solution.

Step 12
Touch the WASH and PUMP symbols and close the draw valve. (See Figure 49.)

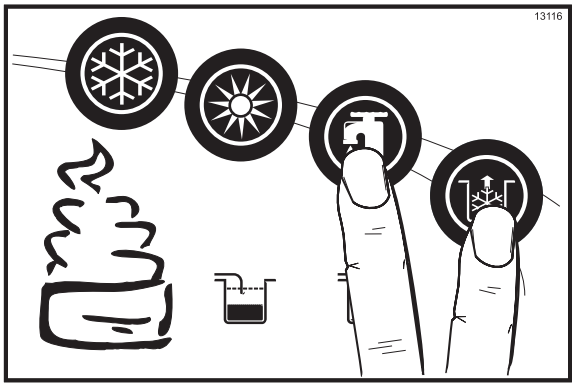

Figure 49

Note: Be sure your hands are clean and sanitized before going on in these instructions.

Step 13
Place the agitator on the agitator drive shaft housing. (See Figure 50.)

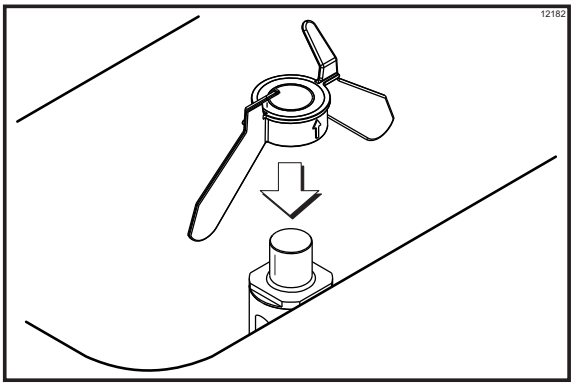

Figure 50

Note: If agitator should stop turning during normal operation, with **sanitized hands**, remove agitator from agitator drive shaft housing and brush clean with sanitizing solution. Install the agitator back onto the agitator drive shaft housing.

Step 14
Remove the cotter pin from the pump. Install the top end of the feed tube into the pump assembly. Place the cotter pin in position on the outlet fitting of the pump assembly. (See Figure 51.)

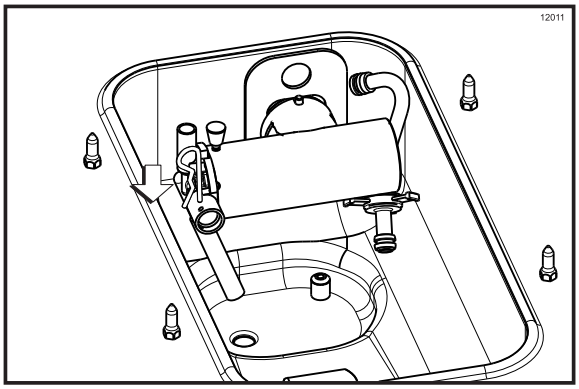

Figure 51

Repeat these steps for the other side of the Model C716.

Priming

Note: Use only FRESH MIX when priming the freezer.

Step 1
Place an empty mix pail beneath the door spout(s). Pour 2-1/2 gallons (9.5 liters) of FRESH mix into the mix hopper and allow it to flow into the freezing cylinder.

Step 2
Open the draw valve to remove all sanitizing solution. When only fresh mix is flowing, close the draw valve.

Note: Momentarily open the center draw valve to remove sanitizer from the center door spout (C716 only).

Step 3
When mix stops bubbling down into the freezing cylinder, remove the cotter pin from the outlet fitting of the mix pump. Insert the outlet end of the mix feed tube into the mix inlet hole in the mix hopper. Place the inlet end of the mix feed tube into the outlet fitting of the mix pump. Secure with cotter pin.

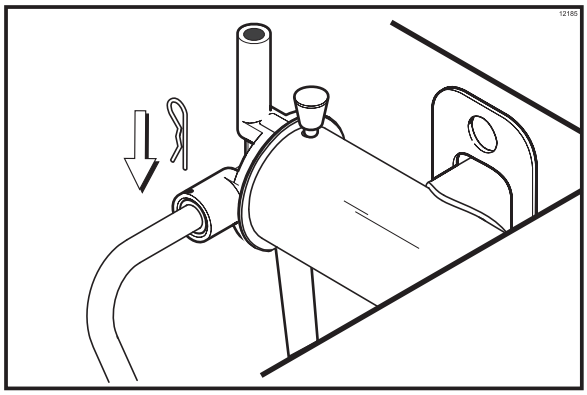

Figure 52

Step 4
Select the AUTO symbol ❄.

Step 5
Fill the hopper with fresh mix and place the mix hopper cover in position.

Repeat these steps for the other side of the Model C716.

Daily Closing Procedures

This procedure must be performed once daily!

The function of the Heat Treatment Cycle is to destroy bacteria by raising the temperature of the mix in the freezing cylinder and the hopper to a specified temperature for a specified period of time, and then bringing the temperature back down low enough to retard spoilage.

The Heat Treatment Cycle will start at the time designated in the Auto Heat Time.

IMPORTANT: The level of mix in the hoppers must be high enough to cover the agitator paddles. Note: If the BRUSH CLEAN COUNTER display has counted down to one day, do not add mix. The machine must be disassembled and brush cleaned within 24 hours.

The freezer must be in the AUTO (AUTO symbol ❄ illuminated) or in the STANDBY mode (STANDBY symbol illuminated) before the HEAT cycle may be started.

Step 1
Remove the hopper cover(s).

MAKE SURE YOUR HANDS ARE CLEAN AND SANITIZED BEFORE PERFORMING THESE NEXT STEPS.

Step 2
Remove the agitator(s) from the mix hopper(s).

Step 3
Remove the design caps (C716 only).

Step 4
Take the agitator(s), hopper cover(s) and design cap(s) to the sink for further cleaning and sanitizing.

Step 5
Rinse these parts in cool, clean water.

Step 6
Prepare a small amount of an approved 100 PPM cleaning/sanitizing solution (example: Kay-5® or Stera-Sheen®). USE WARM WATER AND FOLLOW THE MANUFACTURER'S SPECIFICATIONS. Brush clean the agitator(s) and the hopper cover(s).

Step 7
Prepare a small amount of an approved 100 PPM cleaning/sanitizing solution (example: Kay-5® or Stera-Sheen®). USE WARM WATER AND FOLLOW THE MANUFACTURER'S SPECIFICATIONS. Sanitize the agitator(s) and hopper cover(s).

Step 8
Install the agitator(s) back onto the agitator drive shaft housing(s). Replace the hopper cover(s).

IMPORTANT: If you do not install the agitator(s) correctly, the machine will fail the heat cycle and lock out in the morning.

Step 9
Return to the freezer with a small amount of cleaning solution. Dip the door spout brush into the cleaning solution and brush clean the door spout(s) and bottom of the draw valve(s).

Note: To assure sanitary conditions are maintained, brush each item for a total of 60 seconds, repeatedly dipping the brush in cleaning solution.
(See Figure 53.)

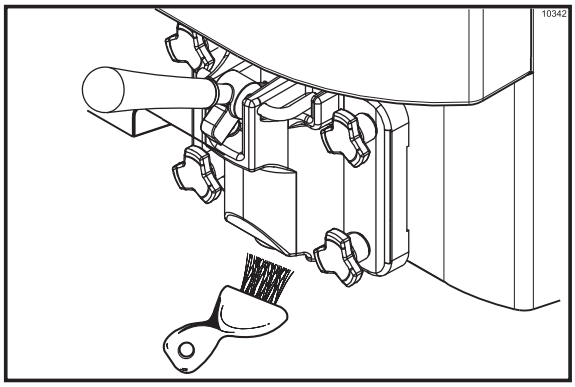

Figure 53

080222

Step 10
Remove, clean and reinstall all drip pans. (See Figure 54.)

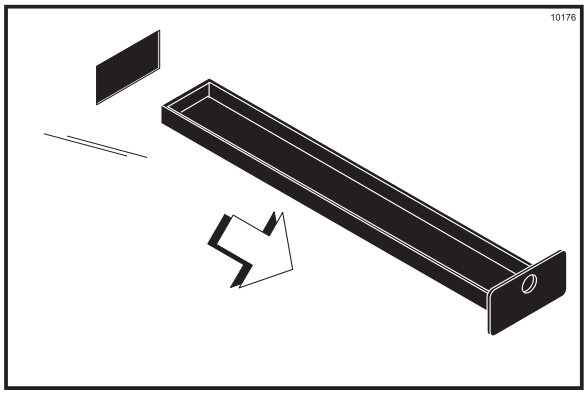

Figure 54

Step 11
Using a clean, sanitized towel, wipe down the freezer door, front panel, the area around the bottom of the freezer door, and any other areas that demonstrate a build-up of either moisture or food substance.

The heat cycle will start when the clock on the machine reaches the AUTO HEAT TIME set in the Manager's Menu (See page 24).

There are 3 phases of the heat cycle: Heating, Holding and Cooling. Each phase has a time limit. If any one of the three phases fail to reach the proper temperatures within the time limit, the cycle will automatically abort and return to the STANDBY mode.

A failure message will appear on the fluorescent display to inform the operator that the machine did not successfully complete the heat treatment cycle. The product may not be safe to serve. The freezer will be locked out (softlock) of the AUTO mode. The operator will be given the option of selecting the HEAT symbol which will begin a new heat cycle, or touching the WASH symbol which will place the freezer into the OFF mode to allow a brush clean of the machine.

Note: Once the heating cycle has started, it cannot be interrupted. The heating cycle will take a maximum of 4 hours to complete with full hoppers.

DO NOT attempt to draw product or disassemble the machine during the HEAT cycle. The product is hot and under extreme pressure.

When the heating cycle is complete, the control will return to the STANDBY mode. The STANDBY symbol(s) will be illuminated.

Daily Opening Procedures

Before performing the opening procedures, check the display panel for any error messages. Normally the display is blank unless an operational fault has occurred. If a fault has been detected, investigate the cause and follow the instructions on the display before proceeding with the opening procedures. (See Failure Messages, starting on page 26.)

Set-Up - Complete The Following

Make sure your hands are clean and sanitized before performing these next steps.

Step 1
Prepare a small amount of an approved 100 PPM sanitizing solution (example: Kay-5® or Stera-Sheen®). USE WARM WATER AND FOLLOW THE MANUFACTURER'S SPECIFICATIONS.

Step 2
Return to the freezer with a small amount of sanitizing solution. Dip the door spout brush into the sanitizing solution and brush clean the door spout(s) and bottom of the draw valve(s). (See Figure 55.)

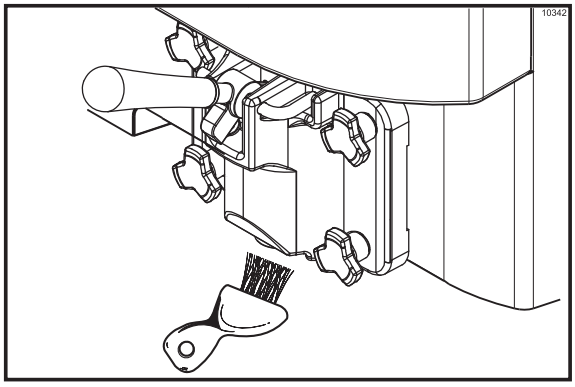

Figure 55

Note: To assure sanitary conditions are maintained, brush clean each item for a total of 60 seconds, repeatedly dipping the brush in sanitizing solution.

Step 3
Using a clean, sanitized towel, wipe down the freezer door, front panel, the area around the bottom of the freezer door, and any other areas that demonstrate a build-up of either moisture or food substance. Install the front drip tray and splash shield.

Note: Install the design caps (C716 only).

Step 4
When ready to resume normal operation, touch the AUTO symbol ❄. (See Figure 56.)

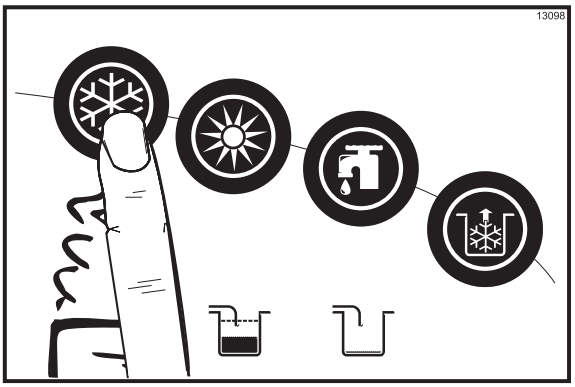

Figure 56

The control has a feature in the Manager's Menu to enable or disable the AUTO START feature. When AUTO START in enabled, the machine will automatically exit the STANDBY mode and start the machine in the AUTO mode at a designated time each day. (See page 24.)

Note: This procedure should be performed 15 minutes prior to serving product.

Manual Brush Cleaning

This Procedure Must Be Completed Every 14 Days!

ALWAYS FOLLOW LOCAL HEALTH CODES.

To disassemble these machines, the following items will be needed:

- Two cleaning and sanitizing pails
- Sanitizer/Cleaner
- Necessary brushes (provided with freezer)
- Single service towels

Draining Product From The Freezing Cylinder

Step 1
With a pail beneath the door spout(s), open the draw valve. Touch the WASH and PUMP symbols. (See Figure 57.)

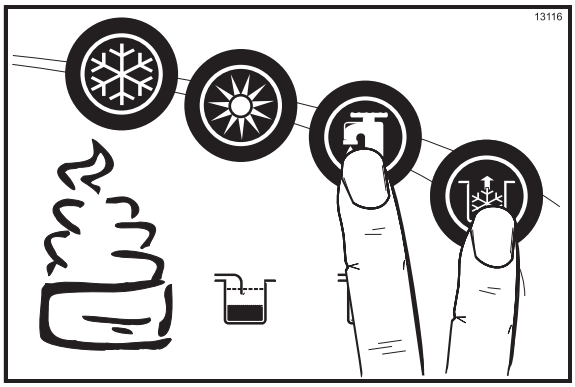

Figure 57

Note: Do not allow the pump to keep running when the draw valve is closed. Excessive pressure will build up, causing product to spurt out when the draw valve is opened.

Step 2
Drain the product from the freezing cylinder and the mix hopper.

Step 3
When the flow of product stops, touch the WASH and PUMP symbols , cancelling the WASH and PUMP modes. Close the draw valve.

Step 4
Remove the locking clip, mix feed tube, pump clip and the assembled air/mix pump.

Repeat these steps for the other side of the Model C716.

Rinsing

Step 1
Pour two gallons (7.6 liters) of cool, clean water into the mix hopper. With the white hopper brush, scrub the mix hopper, mix level sensing probe and the outside of the agitator drive shaft housing. Using the double ended brush, brush clean the mix inlet hole. (See Figure 58.)

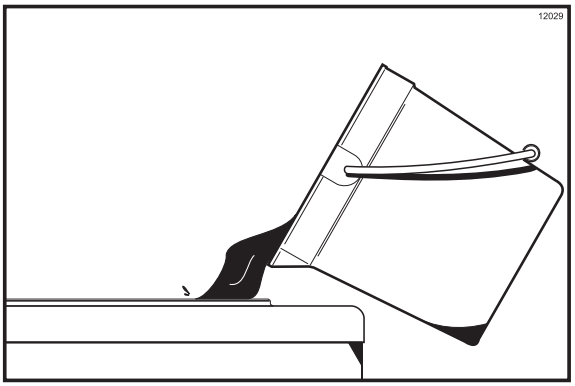

Figure 58

Note: Do not brush clean the mix inlet hole while the machine is in the WASH mode.

Step 2
With a mix pail beneath the door spout,(s) open the draw valve and touch the WASH symbol .
(See Figure 59.)

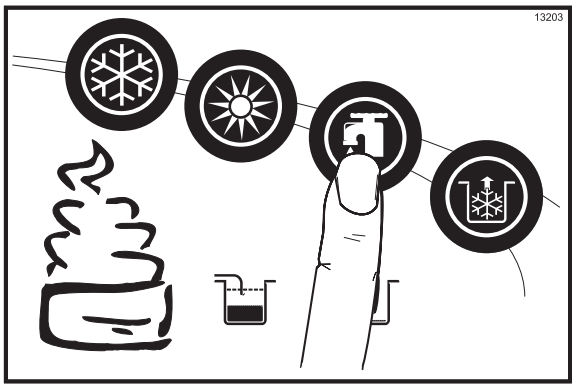

Figure 59

Step 3
Drain all the rinse water from the door spout. Close the draw valve and touch the WASH symbol, cancelling the WASH mode.

Step 4
Repeat this procedure using clean, warm water, until the water being discharged is clear.

Repeat these steps for the other side of the Model C716.

Hopper Cleaning

Step 1
Prepare an approved 100 PPM cleaning solution (examples: 2-1/2 gal. [9.5 liters] of Kay-5® or 2 gal. [7.6 liters] of Stera-Sheen®). USE WARM WATER AND FOLLOW THE MANUFACTURER'S SPECIFICATIONS.

Step 2
Pour the solution into the hopper and allow it to flow into the freezing cylinder.

Step 3
Using the white hopper brush, clean the mix hopper, mix level sensing probes and the outside of the agitator drive shaft housing. Using the double ended brush, clean the mix inlet hole. (**Note:** Do not brush clean the mix inlet hole while the machine is in the WASH mode.)

Step 4
Touch the WASH symbol . This will cause the cleaning solution in the freezing cylinder to come in contact with all areas of the freezing cylinder.

Step 5
Place an empty pail beneath the door spout(s).

Step 6
Open the draw valve on the freezer door and draw off all the solution.

Step 7
Once the cleaning solution stops flowing from the door spout, close the draw valve and touch the WASH symbol, cancelling the WASH mode.

Repeat these steps on the other side of the Model C716.

Disassembly

Note: Failure to remove the parts specified below for brush cleaning and lubrication will result in damage to the machine. These parts must be removed every 14 days or the machine will lock out and will not operate.

MAKE SURE THE POWER SWITCH IS IN THE "OFF" POSITION! Failure to follow this instruction may result in severe personal injury from hazardous moving parts.

Step 1
Remove the handscrews, freezer door, beater and scraper blades, and drive shaft with drive shaft seal from the freezing cylinder.

Step 2
Remove the scraper blade clips from the scraper blades.

Step 3
Remove the drive shaft seal from the drive shaft.

Step 4
From the pump cylinder, remove the retaining pin, mix inlet adaptor, valve cap, pump gasket, and the piston. Remove the o-ring from the piston and valve cap.

Step 5
Remove the freezer door gasket, front bearing, pivot pin, draw handle, and draw valve. Remove the three o-rings from the draw valve.

Note: Remove the design caps (C716 only).

Step 6
Remove the pump drive shaft from the drive hub in the rear wall of the mix hopper. (See Figure 60.)

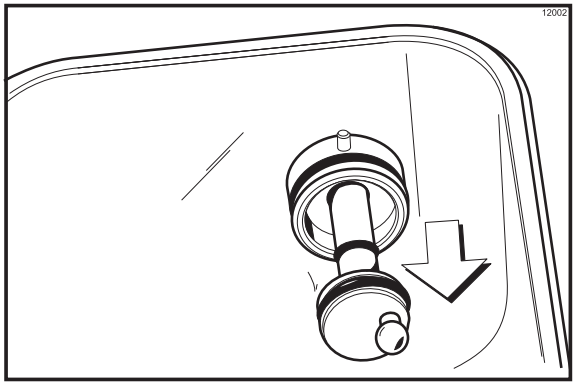

Figure 60

Step 7
Remove the two small o-rings and one large o-ring from the pump drive shaft.

Repeat these steps on the other side of the Model C716.

Step 8
Remove the front drip tray and splash shield.

Step 9
Remove all drip pans. Take them to the sink for cleaning. (See Figure 61.)

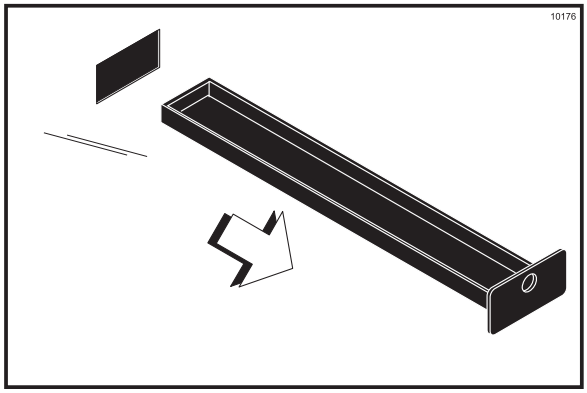

Figure 61

Note: If the drip pans are filled with an excessive amount of mix, it is an indication that the drive shaft seal(s), or o-ring(s) should be replaced or properly lubricated.

Brush Cleaning

Step 1
Prepare an approved 100 PPM cleaning solution (examples: 2-1/2 gal. [9.5 liters] of Kay-5® or 2 gal. [7.6 liters] of Stera-Sheen®). USE WARM WATER AND FOLLOW THE MANUFACTURER'S SPECIFICATIONS. Make sure all brushes provided with the freezer are available for brush cleaning.

Step 2
Thoroughly brush clean all disassembled parts in the cleaning solution, making sure all lubricant and mix film is removed. Be sure to brush all surfaces and holes, especially the holes in the pump components and the draw valve hole in the freezer door.

Rinse all parts with clean, warm water. Place the parts on a clean, dry surface to air dry overnight.

Step 3
Return to the freezer with a small amount of cleaning solution. Using the black brush, clean the rear shell bearing at the back of the freezing cylinder. (See Figure 62.)

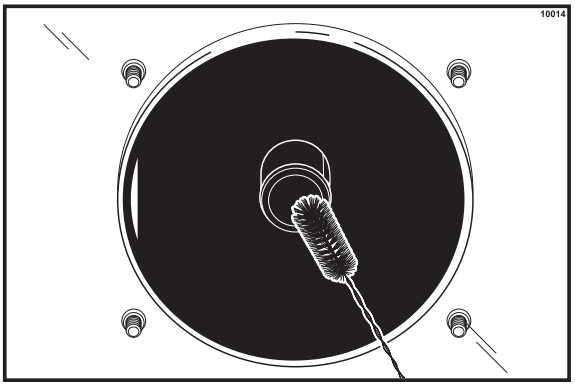

Figure 62

Step 4
Using the black brush, clean the drive hub opening in the rear wall of the mix hopper. (See Figure 63.)

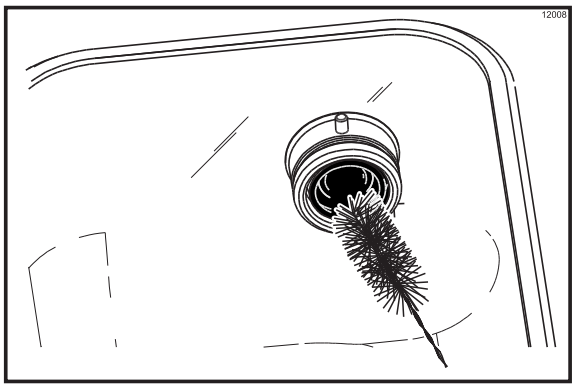

Figure 63

Repeat these steps on the other side of the Model C716.

Step 5
Wipe all exterior surfaces of the freezer with a clean, sanitized towel.

Section 7 Important: Operator Checklist

During Cleaning and Sanitizing

ALWAYS FOLLOW LOCAL HEALTH CODES.

Cleaning and sanitizing schedules are governed by your State or local regulatory agencies and must be followed accordingly. The following check points should be stressed during the cleaning and sanitizing operations.

CLEANING AND SANITIZING MUST BE PERFORMED EVERY 14 DAYS.

Troubleshooting Bacterial Count

☐ 1. Thoroughly clean and sanitize the machine regularly, including complete disassembly and brush cleaning.

☐ 2. Use all brushes supplied for thorough cleaning. The brushes are specially designed to reach all mix passageways.

☐ 3. Use the white bristle brush to clean the mix inlet hole which extends from the mix hopper down to the rear of the freezing cylinder.

☐ 4. Use the black bristle brush to thoroughly clean the rear shell bearing located at the rear of the freezing cylinder and the drive hub opening in the rear wall of the mix hopper. Be sure there is a generous amount of cleaning solution on the brush.

☐ 5. Properly prepare the cleaning and sanitizing solutions. Read and follow the label directions carefully. Too strong of a solution may damage the parts and too weak of a solution will not do an adequate job of cleaning or sanitizing.

☐ 6. The temperature of the mix in the mix hopper and walk-in cooler should be below 40°F (4.4°C).

☐ 7. Discard remaining mix from the freezer during “Cleaning Procedures”.

Regular Maintenance Checks

☐ 1. Replace scraper blades that are nicked or damaged. Before installing the beater assembly, be certain that scraper blades are properly attached to the helix.

☐ 2. Check the rear shell bearing for signs of wear (excessive mix leakage in rear drip pan) and be certain it is properly cleaned.

☐ 3. Using a screwdriver and cloth towel, keep the rear shell bearing and the female hex drive socket clean and free of lubricant and mix deposits.

☐ 4. Dispose of o-rings and seals if they are worn, torn, or fit too loosely, and replace with new ones.

☐ 5. Follow all lubricating procedures as outlined in “Assembly”.

☐ 6. If your machine is air cooled, check the condensers for accumulation of dirt and lint. Dirty condensers will reduce the efficiency and capacity of the machine. Condensers should be cleaned **monthly** with a soft brush. **Never** use screwdrivers or other metal probes to clean between the fins.
Note: For machines equipped with an air filter, it will be necessary to vacuum clean the filters on a monthly schedule.

Caution: Always disconnect electrical power prior to cleaning the condenser. Failure to follow this instruction may result in electrocution.

050808

☐ 7. If your machine is water cooled, check the water lines for kinks or leaks. Kinks can occur when the machine is moved back and forth for cleaning or maintenance purposes. Deteriorated or cracked water lines should be replaced only by an authorized Taylor distributor.

Winter Storage

If the place of business is to be closed during the winter months, it is important to protect the freezer by following certain precautions, particularly if the building is subject to freezing conditions.

Disconnect the freezer from the main power source to prevent possible electrical damage.

On water cooled freezers, disconnect the water supply. Relieve pressure on the spring in the water valve. Use air pressure on the outlet side to blow out any water remaining in the condenser. **This is extremely important.** Failure to follow this procedure may cause severe and costly damage to the refrigeration system.

Your local Taylor Distributor can perform this winter storage service for you.

Wrap detachable parts of the freezer such as beater, blades, drive shaft, and freezer door, and place them in a protected dry place. Rubber trim parts and gaskets can be protected by wrapping them with moisture-proof paper. All parts should be thoroughly cleaned of dried mix or lubrication which attract mice and other vermin.

It is recommended that an authorized service technician perform winter storage draining, to insure all water has been removed. This will guard against freezing and rupturing of the components.

PROBLEM	PROBABLE CAUSE	REMEDY	PAGE REF.
1. Soft lock message appears on display.	a. More than 24 hours since the last HEAT cycle.	a. The freezer must go through a HEAT cycle every 24 hours. The freezer must now be disassembled and brush cleaned or placed in a heat cycle.	20
	b. The power switch is in the OFF position.	b. The power switch must be in the ON position. The freezer must now be disassembled and brush cleaned or placed in a heat cycle.	21
	c. The freezer was not in the AUTO or STANDBY mode when the heat cycle was programmed to start.	c. The freezer must be in the AUTO or STANDBY mode. The freezer must now be disassembled and brush cleaned or placed in a heat cycle.	21
	d. Mix out or mix low condition.	d. The level of mix in the mix hopper must be above the mix low probe. The freezer must now be disassembled and brush cleaned or placed in a heat cycle.	21
	e. The agitator is not installed.	e. The agitator must be cleaned and installed before starting the HEAT cycle. The freezer must now be disassembled and brush cleaned or placed in a heat cycle.	40
	f. There was a power failure.	f. Check fault messages and product temperature. Disassemble and brush clean, or initiate a heat treatment cycle.	26

PROBLEM	PROBABLE CAUSE	REMEDY	PAGE REF.
2. Hard lock message appears on display.	a. Brush clean interval exceeded. (Programmable from 2 - 14 days.)	a. The freezer must be disassembled and brush cleaned within 24 hours when the counter indicates one day remaining.	20
	b. A barrel or hopper thermistor is faulty.	b. Call an authorized service technician.	- - -
3. No control panel functions with power switch ON.	a. Machine is unplugged.	a. Plug into wall receptacle.	- - -
	b. Circuit breaker OFF or blown fuse.	b. Turn the breaker ON or replace the fuse.	- - -
4. Machine makes a squealing noise.	a. Starved barrel.	a. Remove ,clean and reinstall the pump.	34, 37, 44
5. No product is being dispensed.	a. Low on mix. The MIX OUT light is on.	a. Add mix to the hopper. Return to AUTO mode.	39
	b. The power switch is in the OFF position.	b. Place the power switch to ON and select AUTO.	38
	c. Machine not in AUTO mode.	c. Select AUTO and allow machine to cycle off before drawing product.	39
	d. Beater motor is out on reset. The BEATER OVERLOAD message displayed.	d. Turn the machine off. Press the reset button. Restart the machine in AUTO.	- - -
	e. The pump motor is not running in the AUTO mode.	e. Push the pump reset button. Check pump motor is operating when the draw valve is raised.	17
	f. Freeze-up in mix inlet hole.	f. Call an authorized service technician.	- - -
	g. The mix pump ball crank is broken.	g. Call an authorized service technician.	- - -
	h. Feed tube or check ring not properly installed.	h. Make sure feed tube and rubber check ring are properly installed.	36, 39

PROBLEM	PROBABLE CAUSE	REMEDY	PAGE REF.
6. The product is too soft.	a. Draw rate is set too fast.	a. Adjust draw rate of 5 to 7 1/2 oz. (142 g. to 213 g.) of product by weight in 10 seconds.	17
7. The product is too thick.	a. Freezing cylinder not primed correctly.	a. Drain the freezing cylinder and reprime the machine.	39
	b. Air/mix pump incorrectly assembled.	b. Follow assembly procedures carefully.	34
	c. The viscosity control is set too cold.	c. Call an authorized service technician.	- - -
	d. Freeze-up in mix inlet hole.	d. Call an authorized service technician.	- - -
	e. Butterfat is in the pump.	e. Disassemble , clean and reinstall the pump.	34, 37, 44
8. The mix in the hopper is too warm.	a. Hopper cover is not in position.	a. Clean and sanitize hopper cover and place in position.	40
	b. The agitator is not installed.	b. Clean and sanitize the agitator and install.	40
	c. The hopper temperature is out of adjustment.	c. Call an authorized service technician.	- - -
9. The mix in the hopper is too cold.	a. The hopper temperature is out of adjustment.	a. Call an authorized service technician.	- - -
10. Mix Low and Mix Out probes are not functioning.	a. Milkstone build-up in the hopper.	a. Clean hoppers thoroughly.	45
11. Product is collecting on top of the freezer door.	a. The top o-ring on draw valve is improperly lubricated or worn.	a. Lubricate properly or replace the o-ring.	33
12. Excessive mix leakage from the bottom of door spout.	a. Bottom o-ring on draw valve is improperly lubricated or worn.	a. Lubricate properly or replace the o-ring.	33

PROBLEM	PROBABLE CAUSE	REMEDY	PAGE REF.
13. Excessive mix leakage into the long drip pan.	a. The seal on drive shaft is improperly lubricated or worn.	a. Lubricate properly or replace the seal.	29
	b. The seal is installed inside-out on the drive shaft.	b. Install correctly.	29
	c. Inadequate lubrication of the drive shaft.	c. Lubricate properly.	29
	d. The drive shaft and beater assembly work forward.	d. Call an authorized service technician.	- - -
	e. Worn rear shell bearing.	e. Call an authorized service technician.	- - -
	f. Gear box out of alignment.	f. Call an authorized service technician.	- - -
14. The drive shaft is stuck in the drive coupling.	a. Mix and lubricant collected in drive coupling.	a. Brush clean the rear shell bearing area regularly.	45
	b. Rounded corners of drive shaft, drive coupling, or both.	b. Call an authorized service technician.	- - -
	c. Gear box is out of alignment.	c. Call an authorized service technician.	- - -
15. The freezing cylinder walls are scored.	a. Missing or worn front bearing and beater shoes.	a. Install or replace the front bearing and beater shoes.	30, 33
	b. Broken freezer door baffle rod.	b. Replace freezer door.	33
	c. Broken beater pins.	c. Replace beater assembly.	30
	d. Beater assembly is bent.	d. Replace beater assembly.	30
	e. Gear box is out of alignment.	e. Call an authorized service technician.	- - -
16. The product makes a popping sound when drawn.	a. Draw rate is set too fast.	a. Adjust draw rate of 5 to 7 1/2 oz. (142 g. to 213 g.) of product by weight in 10 seconds.	17
	b. Pump assembled incorrectly.	b. Assemble and lubricate according to instructions in this manual.	34
	c. Freezing cylinder not primed correctly.	c. Drain the freezing cylinder and reprime the machine.	39

Section 9 Parts Replacement Schedule

PART DESCRIPTION	EVERY 3 MONTHS	EVERY 6 MONTHS	ANNUALLY
Scraper Blade	X		
Drive Shaft Seal	X		
Freezer Door Gasket	X		
Front Bearing	X		
Front Beater Shoes	X		
Draw Valve O-Ring	X		
Mix Feed Tube O-Ring	X		
Pump O-Ring	X		
Pump Valve Gasket	X		
Mix Feed Tube Check Ring	X		
Pump Drive Shaft O-Ring	X		
White Bristle Brush, 3” x 7”		Inspect & Replace if Necessary	Minimum
White Bristle Brush, 3” x 1/2”		Inspect & Replace if Necessary	Minimum
White Bristle Brush, 1-1/2” x 3”		Inspect & Replace if Necessary	Minimum
White Bristle Brush, 1” x 2”		Inspect & Replace if Necessary	Minimum
Black Bristle Brush, 1” x 2”		Inspect & Replace if Necessary	Minimum
Double-Ended Brush		Inspect & Replace if Necessary	Minimum
Yellow Bristle Brush		Inspect & Replace if Necessary	Minimum
Brush Set (3)		Inspect & Replace if Necessary	Minimum

DESCRIPTION	PART NUMBER	C708 QTY.	C716 QTY.	WARR. CLASS	REMARKS
ACCUMULATOR-COPPER 2"DIA 10"	047062	1	2	103	
ACTUATOR A.-DRAW SWITCH	X62401		1	103	
ADATOR-MIX INLET-SS-RED	54825	1	2	103	
BEARING-FRONT-SHOE	050348	1	2	000	KIT X50350
+SHOE-FRONT HELIX *FRONT*	050347	1	2	000	
+SHOE-FRONT HELIX *REAR*	050346	1	2	000	
BEARING-REAR SHELL-NICKEL	031324	1	2	000	
+GUIDE-DRIP SEAL	028992	1	2	000	
+NUT-BRASS BEARING	028991	1	2	000	
+WASHER-BEARING LOCK	012864	1	2	000	
BEATER A.-3.4QT-1 PIN-SUPPORT	X46231	1	2	103	
+BLADE-SCRAPER-PLASTIC 8-1/8L	046235	2	4	000	
+CLIP-SCRAPER BLADE 7.00 INCH	046236	2	4	103	
BELT-AX39	023874	2		000	208-230V 60HZ 1PH
BELT-AX32	032769		4	000	
BLADE A.-AGITATOR *C708*	X56591	1	2	103	
BLOCK-TERMINAL 2P .25 SPADE	051644	1		103	
BLOCK-TERMINAL 2P .2 SCREWTYPE	040321-002	1	2	103	
BLOCK-TERMINAL 2P-L1,L2	039422	1	2	103	208-230V 60HZ 1PH
BLOCK-TERMINAL 3P-L1,L2,L3	039423	1	2	103	208-230V 60HZ 3PH
BLOCK-TERMINAL 3P 20A, 300V	051331	1		103	208-230V 60HZ 1PH
BLOWER-HIGH OUTPUT-HTGS	059750-27		1	103	
BOOT-VALVE-EXPANSION	050900	1	2	000	BARREL
BOOT-VALVE-EXPANSION	027137	1		000	HOPPER TXV
BOTTLE-WASH-PLASTIC	044818	1		000	
BRUSH A.-PACKAGE-HT	X44127	1	1	000	
BRUSH-REAR BRG 1"D X 2"LG X	013071	1	1	000	
BRUSH-DBL END-PUMP & FEED TUBE	013072	1	1	000	
BRUSH-DRAW VALVE 1"OD X 2"X17"	013073	1	1	000	
BRUSH-DRAW VALVE 1-1/2"OD X 14"	014753	1	1	000	
BRUSH-MIX PUMP BODY-3" X 7" WH	023316	1	1	000	
BRUSH-1/2" DIA	033059	1	1	000	
BRUSH-END-DOOR-SPOUT-SS-HT	039719	1	1	000	
BRUSH-SET LVB	050103	1	1	000	

DESCRIPTION	PART NUMBER	C708 QTY.	C716 QTY.	WARR. CLASS	REMARKS
BRUSH-PUMP SPOUT *MC13*	054068	1	1	000	
BRUSH-SET LVB	050103	1	1	000	
CABLE-RIBBON-14C-14"L SIP/SIP	040040-015	1		103	PCB TOUCH PAD DISPLAY
CABLE-RIBBON-20C-14"L-DIL/DIL	040040-040	1	2	103	J2C TO J12IF
CABLE-RIBBON-20C-17"L-DIL/DILR	040040-013		1	103	
CABLE-RIBBON-20C-18"L-DIL/DILR	040040-042	1		103	J7C TO J9IF
CABLE-RIBBON-50C-10"L-DIL/DIL	040040-058		1	103	
CABLE-RIBBON-50C-20"L-DIL/DIL	040040-011	1		103	J10C TO J2IF
CABLE-RIBBON-50C-25"L.DIL/DIL	040040-025		1	103	
CABLE-USB	056785	1	1	103	PCB TOUCH PAD DISPLAY
CAP-DESIGN 1.010"ID-6 POINT	014218		3	000	
CAP-VALVE BODY SS	056874-12	1		103	
CAP-VALVE BODY SS	056874-16	1		103	
CAPACITOR-MOTOR-AGITATOR	057525	1	2	103	
CAPACITOR-RUN 440VAC 50/60HZ	059789	1	1	103	
CAPACITOR-START 47-56UF/220TO	037251-34	1	2	103	
CASTER-4" SWV 3/4-10 STM	044106		4	103	
CD-OPS TRAINING VIDEO *C708*	062069-CD	1	1	000	
COMPRESSOR L64A113BBCA	048259-27E	1	2	512	S/N K7112082 & UP - 208-230V 60HZ 1PH - BRISTOL
+CAPACITOR-RUN 25UF/440V	037431	1	2	103	
+CAPACITOR-START 189-227UF/33	033044-1	1	2	103	
+RELAY-START-COMPRESSOR	062363	1	2	103	
+GROMMET-COMPRESSOR MOUNTING	037428	4	8	000	
+SLEEVE-MOUNTING-COMP.	039924	4	8	000	
COMPRESSOR L63A113DBLA	048259-33	1	2	512	208-230V 60HZ 3PH - BRISTOL S/N K7112086 & UP
COMPRESSOR CS20K6E-PFV-238	057011-27	1	2	512	S/N K7109124 & PRIOR - 208-230V 60HZ 1PH - COPELAWELD
+CAPACITOR-RUN 40MF/440V	036049	1	2	103	"
+CAPACITOR-START 189-227UF/330V	033044-1	1	2	103	"
+RELAY-START-COMPRESSOR	052401-27	1	2	103	
COMPRESSOR L63A113DBLA	048259-33	1	2	512	K7112084 & UP
COMPRESSOR CS20K6E-TF5-238	057011-33	1	2	512	S/N K7109134 & PRIOR - 208-230V 60HZ 3PH COPELAWELD
CONDENSER-AC 12LX18HX3.12T-5RW	055813-1		1	103	LEFT
CONDENSER-AC 12LX18HX3.12T-5RW	055813-2		1	103	RIGHT
CONDENSER-AC 16X16 3ROW 14FPI	056944	1		103	
COUPLING-DRIVE 3/4 HEX X 1-7/8	012721	1	2	103	

DESCRIPTION	PART NUMBER	C708 QTY.	C716 QTY.	WARR. CLASS	REMARKS
COUPLING-3/8FS X 1/4FS	031791	2	2	103	
COUPLING-3/8FS X 5/16FS	054654	1	2	103	LINE A. DISCHARGE
COVER-HOPPER *BLACK*					SEE KIT A.COVER-HOPPER
DECAL-INST-CLN-DAY-HT-SS	045273	1	1	000	
DECAL-INST-CLN-HT-SS	045276	1	1	000	
DECAL-TROUBLESHOOT	038374	1	1	000	
DEFLECTOR-BLOWER-EXHAUST	059929		1	103	
DIAGRAM-WIRING *C708/C709*	057010-27	1		000	208-230V 60HZ 1PH
DIAGRAM-WIRING *C708/C709*	057010-33	1		000	208-230V 60HZ 3PH
DIAGRAM-WIRING *C716*	059900-27		1	000	208-230V 60HZ 1PH
DIAGRAM-WIRING *C716*	059900-33		1	000	208-230V 60HZ 3PH - 3 WIRE
DOOR A.-W/BAFFLE	X57332-SER	1		103	
+GASKET-DOOR HT 4"-DOUBLE	048926	1		000	
+HANDLE A.-DRAW-WELDED *C708*	X56742	1		103	
+O-RING-1/4 OD X .070W 50 DURO	015872	1		103	
+O-RING-7/8 OD X .103W	014402	3		000	
+PIN-HANDLE-SS *C602*	055819	1		103	
+SCREW-ADJUSTMENT-5/16-24 *602*	056332	1		103	
+VALVE A.-DRAW *C602*	X55820	1		000	
DOOR A.-3SPT*HT*LG BAF*W/O PRG	X59923-SER		1	103	
+BEARING-FRONT-SHOE	050348		2	000	
+DECAL-DOOR-3 SPOUT-TWIN TWIST	062239		1	000	
+GASKET-DOOR-4"-DART	048926-1		2	000	
+HANDLE A.-DRAW-WELDED *C602*	X56421-1		3	103	
+O-RING-1/4 OD X .070W 50 DURO	015872		3	000	
+O-RING-7/8 OD X .103W	014402		8	000	
+PIN-HANDLE-TWIN *C712/C717*	059894		1	103	
+SCREW-ADJUSTMENT-5/16-24 *602*	056332		3	103	
+SEAL-DRAW VALVE	034698		1	000	
+VALVE A.-DRAW-CENTER *C716/717	X59890		1	103	
+VALVE A.-DRAW-L & R *C716/717	X59888		2	103	
DRYER-FILTER-HP62-3/8 X 1/4S	048901	1		000	
DRYER-FILTER 3/8 X 3/8SOL HP	049154		2	000	
DVD-OPS TRAIN VID *C708/C716	062069-DVD	1	1	000	
EYELET-RESET BUTTON	013739	2	6	103	

DESCRIPTION	PART NUMBER	C708 QTY.	C716 QTY.	WARR. CLASS	REMARKS
FASTENER-DOOR LATCH	030787	2	2	000	
FASTENER-DOOR STRIKE	030788	2	2	000	
FILTER-AIR-21.688X15.813HX.70W	052779-9	1	2	000	
FILTER-AIR-POLY-FLO	052779-11		2	000	
FILTER-CORCOM 6EH1	040140-001	1	1	103	
GASKET-BASE PAN *C708*	056364	1		000	
GEAR A.*REDUCER 4.21:1	021286-SER	1	2	212	
GUARD-POWER SWITCH	034830	1	1	103	
GUIDE A.-DRIP PAN	X28863	1		103	
GUIDE A.-DRIP PAN-PUMP *C706*	X56326	1		103	MIX PUMP BOX ASSY
GUIDE A.-DRIP PAN-MIX PUMP	X48228		2	103	
GUIDE A.-DRIP PAN-LEFT	X59910		1	103	
GUIDE A.-DRIP PAN-RIGHT	X59911		1	103	
GUIDE A.-DRIP PAN-CENTER	X59913		1	103	
HARNESS-WIRE-BEATER MOTOR	057725-27G	1		103	208-230V 60HZ 1
HARNESS-WIRE-BEATER MOTOR	057725-33G	1		103	208-230V 60HZ 3
HARNESS-WIRE-BEATER MOTOR-1PH	062053-27G		2	103	S/N K7112082 & UP - 208-230V 60HZ 1PH - BRISTOL
HARNESS-WIRE-CAP/RELAY BOX	057727-33	1		103	208-230V 60HZ 3
HARNESS-WIRE-COMPRESSOR	062056-33G		2	103	208-230V 60HZ 3 - S/N K7112086 & UP
HARNESS-WIRE-COMP. RIGHT*863	056103	1		103	208-230V 60HZ 3
HARNESS-WIRE-COMP. H60-H63	059245	1		103	208-230V 60HZ 3PH
HARNESS-WIRE-MAIN POWER *C708*	058285-27G	1		103	208-230V 60HZ 1
HARNESS-WIRE-MAIN POWER *C708*	058285-33G	1		103	208-230V 60HZ 3
HARNESS-WIRE-SOL VLV/FAN MTR	057726	1		103	208-230V 60HZ 1PH / 208-230V 60HZ 3
HARNESS-WIRE-THERMISTOR-PROBE	057728	1		103	208-230V 60 1 & 3
HOUSING A.-AGITATOR *C708*	X56586-03	1	2	103	
BODY-AGITATOR HOUSING *C708*	056588	1	2	103	
CAP-AGITATOR HOUSING *C708*	056589	1	2	103	
NUT-AGITATOR BELT HOUSING *H	043574	1	2	103	
MAGNET A.-AGITATOR*C708*	X57341	1	2	103	
MAGNET A.-AGITATOR-INNER	X41733	1	2	103	
SCREW-8-32X3/16 ALLEN SET	006812	1	2	000	
BUSHING-AGITATOR MAGNET *C708*	057342	1	2	NNN	
MOTOR-AGITATOR-24VAC 50/60 HZ	050535-03	1	2	103	
O-RING-1-3/8 OD X .070W	017395	1	2	000	

DESCRIPTION	PART NUMBER	C708 QTY.	C716 QTY.	WARR. CLASS	REMARKS
PLATE-HOLDING-AGITATOR *C708*	056587	1	2	103	
SCREW-8-32X3/16 ALLEN SET	006812	1	2	000	
SCREW-4-40X1/4 SOC SS	600165	2	4	000	
INTERLOCK A.-DOOR	X65658	1	1	103	S/N K7085360 & UP - REPLACES 056249
FITTING DOOR INTERLOCK	065471	1	1	103	
SPRING-INTERLOCK DOOR	065409	1	1	000	
SWITCH-REED*DOOR INTERLOCK*6	056771	1	1	103	
JACK A.-FLAVORBURST *C706*	X56353	1	2	103	
KIT A.-COVER-HOPPER*SINGLE*BLK	X65368	1		000	
COVER-HOPPER *BLACK*	053809-1	1		103	
LABEL-CAUTION-AGITATOR	045191	1		000	
+PIN-RETAINING-HOPPER COVER	043934	4		103	
KIT A.-COVER-HOPPER*DUAL*BLK	X65178		1	000	
COVER-HOPPER *BLACK*	053809-1		2	103	
LABEL-CAUTION-AGITATOR	045191		2	000	
+PIN-RETAINING-HOPPER COVER	043934		2	103	
KIT A.-TUNE UP *C708*	X63146	1		000	
KIT A.-PUMP-SIMPLIFIED SS/SH	X56200-10	1		000	
O-RING-1-3/4 OD X .139W	008904	1		000	DRIVE CRANK
O-RING-11/16ODX.103W-RED	016132	2		000	PUMP FEED TUBE
O-RING-2-1/8 OD X .139W-#225	020051	2		000	VALVE CAP
O-RING 1/2 ID X .139W	048632	2		000	PUMP DRIVE SHAFT
GASKET-SIMPLIFIED PUMP VALVE	053527	1		000	
RING-CHECK-FEED-TUBE	056524	1		000	FEED TUBE
KIT A.-DOOR/BARREL SS C602	X56200-14	1		000	
O-RING-7/8 OD X .103W	014402	3		000	DRAW VALVE
SEAL-DRIVE SHAFT	032560	1		000	DRIVE SHAFT
GASKET-DOOR HT 4"-DOUBLE	048926	1		000	
SHOE-FRONT HELIX *REAR*	050346	1		000	BEATER
SHOE-FRONT HELIX *FRONT*	050347	1		000	BEATER
BEARING-FRONT-SHOE	050348	1		000	
TOOL-O-RING REMOVAL-FREEZER	048260-WHT	1		000	
KIT A.-TUNE C716 SIMPL PUMP	X49463-82		1	000	
KIT A.-PUMP-SIMPLIFIED SS/SHK	X56200-10		2	000	
O-RING-1-3/4 OD X .139W	008904		2	000	

DESCRIPTION	PART NUMBER	C708 QTY.	C716 QTY.	WARR. CLASS	REMARKS
O-RING-11/16ODX.103W-RED	016132		4	000	
O-RING-2-1/8 OD X .139W-#225	020051		4	000	
O-RING 1/2 ID X .139W	048632		4	000	
GASKET-SIMPLIFIED PUMP VALVE	053527		2	000	
RING-CHECK-FEED-TUBE	056524		2	000	
KIT A.-DRAW VALVE C716	X56200-18		1	000	
CAP-DESIGN 1.010"ID-6 POINT	014218		3	000	
O-RING-7/8 OD X .103W	014402		8	000	
SEAL-DRAW VALVE	034698		1	000	
KIT A.-BARREL *TWIN SS*8784*	X56200-6		1	000	
SEAL-DRIVE SHAFT	032560		2	000	
GASKET-DOOR-4"-DART	048926-1		2	000	
SHOE-FRONT HELIX *REAR*	050346		2	000	
SHOE-FRONT HELIX *FRONT*	050347		2	000	
BEARING-FRONT-SHOE	050348		2	000	
TOOL-O-RING REMOVAL-FREEZER	048260-WHT		1	000	
LABEL-CAUTION-GRD-PERM-ENG/SP	032164	1	1	000	
LABEL-DOOR-MOVE PART	032749	1	1	000	
LABEL-RESET-MIX PMP	044452	1	1	000	
LABEL-SW-POWER-OFF/ON-SYMBOLS	052632	1	1	000	
LABEL-WARN-COVER	051433	4	7	000	
LABEL-3PH MTR PROT/1PH C-ENG/S	025949	1		000	208-230V 60HZ 3PH
LABEL-CK MTR ROTATE-CW-ENG/SPN	020090		1	000	208-230V 60HZ 3PH
LIP-DRIP-NOSE CONE	036435	1		000	
LIP-DRIP-NOSE CONE-TWIN	036434		1	000	
LUBRICANT-TAYLOR HI PERF-4 OZ	048232	1	1	000	
MAN-OPER C708/C716	059061-M	1	1	000	
MANIFOLD-1/2S THRU-1/4S OUT-	046688	1	2	103	LINE A.-DISCHARGE
MOTOR-1.5 HP CAPS@8&10 O'CLOCK	056865-27	1		212	208-230V 60HZ 1PH
MOTOR-1.5 HP	021522-27		1	212	208-230V 60HZ 1PH
MOTOR-1.5 HP	021522-33	1	2	212	208-230V 60HZ 3PH - 3 WIRE
MOTOR-2.0 HP	017650-33				
MOTOR A.-AGITATOR					SEE - HOUSING A.-AGITATOR
MOTOR-FAN W/4 BLADE 185W	500303-27	1		103	
+CAPACITOR-RUN 4.0UF/400V	500311	1		103	

DESCRIPTION	PART NUMBER	C708 QTY.	C716 QTY.	WARR. CLASS	REMARKS
+GUARD-FAN	500304	1		103	
MOTOR-REDUCER 32 RPM-HPR PUMPM	036955-34	1	2	212	
+CAPACITOR-START 47-56UF/220TO	037251-34	1	2	103	
+RELAY-MTR START TI#4CR-1-625	039725-27	1	2	103	
+OVERLOAD-TI #2BM-20V9R-KK20-71	044464	1	2	103	
+NUT-OVERLOAD RESET	045026	1	2	000	
NUT-STUD-BLACK 2.563 LONG	058764	2	2	103	
NUT-STUD-BLACK 3.250 LONG	058765	2	2	103	
PAIL-MIX 10 QT.	013163	1	1	000	
PAN-DRIP 11-5/8 LONG	027503	1		103	
PAN A.-DRIP 5 1/2" LONG *C70	X56074	1		103	
PAN-DRIP 12.5	059736		2	NNN	
PAN-DRIP 19-1/2 LONG	035034		1	103	
PAN-DRIP 7.875	059737		2	103	
PANEL A.-FRONT-LOWER *C708*	X58955	1		103	S/N K4115494 AND UP
PANEL A.-FRONT-UPPER *C708*	X59423	1		103	S/N K4115494 AND UP
PANEL A.-FRONT-LOWER *C708*	X56954	1		103	S/N K4087456 & PRIOR
PANEL A.-FRONT-UPPER *C708*	X57017	1		103	S/N K4087456 & PRIOR
PANEL-SIDE-LEFT *C708*	056963	1		103	
PANEL A-SIDE-RIGHT *C707*	X57871	1		103	TOP AIR DISCHARGE USE X57869
PANEL-REAR *C706*	056077	1		103	5/24/2004 & UP
PANEL-REAR *C708*	056966	1		103	6/27/02 To 5/28/04
PANEL A.-FILTER-LOUVERED	X59928		2	103	
PANEL A.-FRONT *C712/C716*	X63879		1	103	TOP UPPER S/N K6024393 & UP
PANEL A.-FRONT *C712-C717*	X59836		1	103	TOP UPPER PRIOR TO S/N K5086297
PANEL A.-FRONT LOWER	X59854		1	103	
PANEL-CORNER-FRNT-R *C712/C716	063087		1	103	
PANEL-CORNER-FRNT-L*C712/C716	063088		1	103	
PANEL-REAR *C712/C716*	064258		1	103	
PANEL-SIDE-LEFT *C712/C717*	059906		1	103	
PANEL-SIDE-RIGHT *C712/C717*	059907		1	103	
PCB A.-INTERFACE *C708* ROHS	X63929-SER	1		212	DEC PLATE
CHIP-SOFTWARE *C602* FP	X40821-SER	1		103	
PCB A.-INTERFACE-HT-SS-C708	X58505-SER	1		212	
PCB A.-PERSONALITY-HT-SS	X46904-SER	1		212	

DESCRIPTION	PART NUMBER	C708 QTY.	C716 QTY.	WARR. CLASS	REMARKS
PCB A.-HT INTERFACE BASE-C708	X58482-SER	1		212	
CHIP-SOFTWARE MIX LEVEL	X40799-SER	1		103	
PCB A.-CONTROL *C708* UVC3SM	X59209-SER	1		212	
CONTROL-UVC3 SURFACE MOUNT-PWM	062529-SER	1		212	
CHIP-SOFTWARE C708 UVC3SM	X40828-SER	1		103	
PCB A.-INTERFACE*C712-C717*ROH	X63925-SER		1	212	50 HZ UNITS - K6076635 & UP - PLATE A.-DEC
+CHIP-SOFTWARE *C602* FP	X40821-SER		1	103	
PCB A.-INTERFACE *C712-C717*	X62101-SER		*	212	50 HZ UNITS - K6053040 & PRIOR PLATE A.-DEC
+CHIP-SOFTWARE *C602* FP	X40821-SER		*	103	
PCB A.-CONTROL *C716* UVC3 SM	X62292-SER		1	212	
CONTROL-UVC3 SURFACE MOUNT-PWM	062529-SER		1	212	REPLACES 059189
CHIP-SOFTWARE UVC3 CS	X40820		1	103	
PCB A.-INTERFACE	X59435-SER		2	212	CONTROL
PCB A.-PERSONALITY-HT-SS	X46904-SER		2	212	
PCB A.-INTERFACE-HOT GAS-C602	X59485-SER		2	212	
CHIP-SOFTWARE MIX LEVEL	X40799-SER		2	103	
PCB A.-INTERFACE *C708* ROHS	X63929-SER	*	*	212	S/N K6076635 & UP - DEC PLATE
CHIP-SOFTWARE *C602* FP	X40821-SER	*	*	103	
PCB A.-INTERFACE *C708*	X57177-SER	*	*	212	S/N K6053040 & PRIOR - DEC PLATE
CHIP-SOFTWARE *C602* FP	X40821	*	*	103	
PIN-RETAINING-HOPPER COVER	043934	4	2	103	
PLATE-DEC *C708*	056958	1		103	
+GASKET-DEC PLATE *C708*	056991	1		000	
+INSULATOR-PCB-INTERFACE	057798	1		000	
PLATE-DEC *C716* SYRUP RAIL	062123		1	103	
+INSULATOR-PCB-INTERFACE *C60	057168		1	000	
PLUG-DRIP TRAY HOLE	029595	1		103	
PROBE A.-MIX	X56912	1		103	MIX LOW
PROBE-MIX OUT *C708*	056908	1		103	MIX OUT
+O-RING-1-3/8 OD X .070W	017395	3		000	
PROBE-THERMISTOR-BARREL-2% TOL	038061-BLK	1		103	HARNESS-WIRE-THERMISTOR PROBES
PROBE-THERMISTOR-HOPPER-2% TOL	039470-BLK	1		103	HARNESS-WIRE-THERMISTOR PROBES
PULLEY-2AK22 X .625-.6265	016403	1	2	103	208-230 60HZ 1PH & 3 PH
PULLEY-2AK74-5/8	027822	1	2	103	208-230V 60HZ 1 PH GEAR
PUMP A.-MIX SIMPLIFIED S.S.	X57029-14	1	2	103	

DESCRIPTION	PART NUMBER	C708 QTY.	C716 QTY.	WARR. CLASS	REMARKS
ADAPTOR-MIX INLET*SOFT/SER*RED	054825	1	2	103	
CAP-VALVE BODY SS	056874-14	1	2	103	
+CLIP-RETAINER-MIX PUMP	044641	1	2	103	
CYLINDER A.-PUMP-HOPPER-S.S.	X57025	1		103	
GASKET-SIMPLIFIED PUMP VALVE	053527	1	2	000	
O-RING-2-1/8 OD X .139W-#225	020051	2	4	000	
PIN A.-RETAINING	X55450	1	2	103	
+PIN-COTTER-HAIRPIN-1/8DIA	044731	1	2	103	
PISTON	053526	1	2	103	
RECEIVER A.-REFRIG.AC*C708/709	X59351	1		103	
RELAY-3 POLE-20A-208/240 50/60	012725-33	1	2	103	
RELAY-DPDT 100UA TO 7A 1/8HP	052111-03	1	2	103	BEATER INTERLOCK
RELAY-DPDT-24VAC-30A@277V	054703-03	2		103	HOT GAS SOLENOIDS
RELAY-MTR START TI#4CR-1-625	039725-27	1	2	103	
SANITIZER KAY-5 125 PACKETS	041082	1	1	000	
SHAFT A.-DRIVE-MIX PUMP-HOPPER	X41947	1	2	103	
O-RING-1-3/4 OD X .139W	008904	1	2	000	
CRANK-DRIVE-HOPPER MIX PUMP	039235	1	2	103	
SHAFT-DRIVE-MIX PUMP-HOPPER	041948	1	2	103	
O-RING 1/2 ID X .139W	048632	2	4	000	
SHAFT-BEATER *C706/C707*	056078	1		103	
+SEAL-DRIVE SHAFT	032560	1		000	
SHAFT-BEATER	032564		2	103	
+SEAL-DRIVE SHAFT	032560		2	000	
SHELF-TRAY-DRIP *C706*	056076	1		103	
SHELL A.-INSULATED *C708/C709	X56969	1		512	
+STUD-NOSE CONE *C602*	055987	4		103	
SHELL A.-INSULATED *C716*	X63818		1	512	
+STUD-NOSE CONE *C602*	055987		4	103	
SHIELD-SPLASH *RD30*	049203	1		103	
SHIELD-SPLASH-WIRE-19-3/4 L	033813		1	103	
SHROUD A.-CONDENSER *C708/C709	X56922	1		103	
SLEEVE A.-MIX PUMP *HT*MCD	X44761	1	2	103	
+NUT-PUMP SLEEVE *8751*HT*	036933	1	2	000	
STARTER-1 PHASE-4.5 TO 7 A	041950-27K	1	2	103	208-230V 60HZ 1PH

DESCRIPTION	PART NUMBER	C708 QTY.	C716 QTY.	WARR. CLASS	REMARKS
STARTER-3 PHASE-3 TO 5 AMP	041950-33J	1	2	103	208-230V 60HZ 3PH
STRAINER-CONE MESH-1/4 ODF	062298	5	4	000	
STRAINER-CONE MESH 1/2 ODF	062299	2		000	
SWITCH A.-DRAW *C706*	X56147	1		103	
ARM A.-DRAW *C706*	X56253	1		103	
E-RING 3/16 .335 O.D.	049178	1		000	
INSULATOR-SWITCH 1/64 ARMITE	029099	2		000	
NUT-4-40 HEX -PLATED-	038623	2		000	
PIN-PIVOT	015478	1		103	
SCREW-4-40X1 RD HD STEEL-ZP	028890	2		000	
SPRING-RETURN-LEFT-SELF CLOSE	041660	1		103	
SPRING-RETURN-RIGHT-SELF CLOSE	041661	1		103	
SWITCH-LEVER-SPDT-10A-125-250V	028889	2		103	
SWITCH A.-DUAL LEVER	X62400		1	103	S/N K5027279 & UP - SEE SWITCH LEVER/ACTUATOR
SWITCH-LEVER-SPDT-10A-125-25	028889		4	103	
SCREW-4-40X1" TAPTITE PAN HD	045141		4	000	
BRACKET-SWITCH*C712*	062394		2	103	
ACTUATOR-TANDEM LEAF	062408		1	103	
SWITCH A.-DRAW *SELF CLOSING*	X59905		1	103	S/N K4115575 & PRIOR
ARM-SWITCH-DRAW-L	038649		1	103	
ARM-SWITCH-DRAW-R	038650		1	103	
E-RING 1/4	032190		4	000	
PIN-PIVOT-DRAW SWITCH	038484		1	103	
ROD-SPRING RETAINER	038254		1	103	
SCREW-4-40X1/2"TAPTITE PAN HD	042604		4	000	
SPRING-EXTENSION.375X.045X1.00	038922		2	103	
SPRING-RETURN-LEFT-TWIN TWIST	038923		1	103	
SPRING-RETURN-RIGHT-TWIN TWIST	038924		1	103	
SWITCH-LEVER-SPDT-11A-125-277V	039252		2	103	
SWITCH-PRESSURE 440 PSI-SOLDER	048230	1	2	103	LINE A.-DISCHARGE
SWITCH-PRESS 220 CO/270 CI	064282	1		103	
SWITCH-REED *DOOR INTERLOCK*	056249	1	1	103	S/N K7072606 & PRIOR - BEATER INTERLOCK
SWITCH-REED*DOOR INTERLOCK*6	056771	1		103	S/N K7085360 & UP - SEE INTERLOCK A.-DOOR
SWITCH-TOGGLE-DPDT*ON-NONE-ON	024295	1		103	
TOOL-O-RING REMOVAL-FREEZER	048260-WHT	1		000	

DESCRIPTION	PART NUMBER	C708 QTY.	C716 QTY.	WARR. CLASS	REMARKS
TOOL-SHAFT-DRIVE-PUMP-HOPPER	057167	1	1	000	
TOOL-SHAFT-DRIVE-PUMP HOPR/LVB	047919	1		000	
TRANS.-120/208/240V PRI 24VSEC	051660	1		103	SOLENOIDS
TRANS.-CONT.-32VA 120/200/240V	054834	1		103	INTERFACE BOARD
TRAY-DRIP *C706/C707*BLACK	056858	1		103	
TRAY-DRIP-19-5/8 L X 4-7/8	033812		1	103	
TRAY-DRIP *C716*	063877		1	103	HOLDS 033812 TRAY S/N K6024393 & UP
TRAY-DRIP *C712/C717*	059892		1	103	USED PRIOR TO S/N k5086297
TRAY-PARTS-BARREL-3.4 QT-17"HT	045756	1		000	
TRAY-PARTS-PUMP-SIMPLIFIED SS	056525	1	2	000	
TRAY-PARTS-BARREL-3.4 QT*C716*	067431		1	000	S/N K9060000 & UP REPLALCES 045755
TRIM-CORNER-REAR-LEFT *C708*	056964	1		103	
TRIM-CORNER-REAR-RIGHT *C708*	056965	1		103	
TRIM-CORNER-REAR-L	059896		1	103	
TRIM-CORNER-REAR-R	059897		1	103	
TUBE A.-FEED-HOPPER S.S.	X56521	1		103	MIX PUMP
+RING-CHECK-FEED-TUBE	056524	1		000	
+O-RING-11/16ODX.103W-RED	016132	2		000	
TUBE A.-FEED-LEFT *C712/C717*	X59808		1	103	
+O-RING-11/16ODX.103W-RED	016132		2	000	
+RING-CHECK-FEED-TUBE	056524		1	000	
TUBE A.-FEED-RIGHT *C712/C717*	X59809		1	103	
+O-RING-11/16ODX.103W-RED 016132	016132		2	000	
+RING-CHECK-FEED-TUBE	056524		1	000	
VALVE-ACCESS-1/4MFL X 3/8ODSDR	053565	2	4	103	LINE A.-DISCHARGE
VALVE-CRANKCASE PRESS REG	064347	1		103	S/N K7085360 & UP REPLACES 057008
VALVE-EPR 5/8FS	065371	1		103	S/N K7085360 & UP REPLACES 057009
+BOOT-INSULATING-EPR	062048	2		000	
VALVE-EXP-AUTO-1/4S X1/4 FPT	046365	1	2	103	BARREL/HOT GAS BYPASS
+BOOT-VALVE-EXPANSION	050900	1	2	000	BARREL
VALVE-SOL 1/8ORF 1/4INX3/8OUT	053511-27	1	2	103	
VALVE-SOLENOID 7/16 ORF 5/8ODF	048626-27	1	2	103	
VALVE-SOLENOID 7/64ORF X 1/4S	043449-27	4	8	103	LINE A.-DRYER/VALVES
VALVE-THERMOSTATIC	057002	1	2	103	HOPPER
+BOOT-VALVE-EXPANSION	027137	1		000	HOPPER

DESCRIPTION	PART NUMBER	C708 QTY.	C716 QTY.	WARR. CLASS	REMARKS
VALVE-LIQUID INJ-HT GAS	057075-1	1	2	103	S/N K7012344 & UP - LINE A.-DRYER/VALVES
VALVE-TREV 3/8X3/8 220 *161*	055378	1	2	103	S/N K6112655 & PRIOR LINE A.-DRYER/VALVES
WATER COOLED					
BLOWER A. C712/C717	X62380-27G		1	103	
BRACKET A.-MOUNTING CONDENSER	X58931	1			
BRACKET-VALVE-W/C *C708* /	058440	1			
BRACKET-VALVE-W/C *C708*	058440	1		NNN	
CONDENSER-WC-COAX	047540-1	1		103	
CONDENSER-WC-COAX	047540		2	103	
GUARD-BLOWER	022505		1	103	
FAN-5 BLADE 7 " PUSH 30D	016289	1		103	
HOSE-RUBBER 1/2"ID X 7/8"/	R50200	5	12'	000	
MANIFOLD-1/2S THRU-1/4S OUT-	046688	1		103	
MOTOR A.-FAN *C708* WC	X59307-27	1		NNN	
MOTOR-FAN 9 WATT 1550RPM-CW	012768-27	1		103	
TERMINAL-MAL.SP.INS.18-22.25	026962	1		000	
BRACKET-FAN *453/750*	038641	1		103	
SCREW-8-36X3/8 SLOT HEX WASH	046137	5		000	
ADAPTOR-3/8MP X 1/2 BARB-	011021	2		103	
OUTLET A.-TEE	X25900		1	103	
PLATE-CONDENSER W/C	062043		1		
PLATE A.-MOUNTING-COUPLIN	X58935	1			
PLATE A.-MOUNTING-COUPLING	X58935	1		103	
PLATE-CONDENSER W/C	062043		1	103	
SWITCH-PRESSURE 350 PSI-SOLD	048231	1	2	103	
TEE-3/8" PIPE WATER VALVE	032953		1	103	
VALVE-WATER 3/8 REG/HEAD	046686	1	2	103	
TOP AIR DISCHARGE					
PANEL A.-SIDE-RIGHT *C708	X57869-SER	1		103	
50 HZ					
BELT-AX33	024396		4	000	200V 50HZ 3PH - 220/240V 50HZ 1PH - 380/415V 50HZ 3N~
BLOCK-TERMINAL 2P L1,N	039421	1		103	220-240V 50HZ 1PH
BLOCK-TERMINAL 3P L1,L2,L3	039423	1	2	103	200V 50HZ 3PH - 200V 50/60HZ 3PH
BLOCK-TERMINAL 4P L1,L2,L3,N	039424	1	1	103	380/415V 50HZ 3N~

DESCRIPTION	PART NUMBER	C708 QTY.	C716 QTY.	WARR. CLASS	REMARKS
BLOCK-TERMINAL 7P GREEN	024156	1		103	200V 50HZ 3PH - 200V 50/60HZ 3PH - 220/240 50HZ 1PH - 380/415V 50HZ 3N~
BLOCK-TERMINAL 2P L1,N	039421		2	103	220-240V 50HZ 1PH
CAPACITOR A.-RF	X58666	1		000	220-240V 50HZ 1PH
CAPACITOR A.-RF	X58666-1		2	000	220-240V 50HZ 1PH
CAPACITOR-RUN 25UF/370VAC	023739		2	103	220-240V 50HZ 1PH
CAPACITOR-RUN 25UF/370VAC	023739	1		103	220-240V 50HZ 1PH
CAPACITOR-START 161-193UF	031790		2	103	220-240V 50HZ 1PH
CAPACITOR-START 161-193UF	031790	1		103	220-240V 50HZ 1PH
CAP-VALVE BODY SS	056874-8	1		103	200V 50HZ 3PH - 200V 50/60HZ 3PH
CAP-VALVE BODY SS	056874-10	1		10	200V 50HZ 3PH - 200V 50/60HZ 3PH
CONTROL-INTERF-HT-SS-C712-ROHS	X63967-SER		2	212	220/240V 50HZ 1PH - 380/415V 50HZ 3N~
PCB A.-ROHS-PERSONALITY-HT-SS	X63922-SER		2	212	
CONTROL-ROHS-INTF-HOTGAS*C602*	063926		2	212	
CHIP-SOFTWARE MIX LEVEL	X40799		2	103	
COMPRESSOR L63A113DBLA	048259-33	1	2	512	200V 50HZ 3PH - 200V 50/60HZ 3PH
COMPRESSOR L63A113BBKA	048259-40	1	2	512	220/240V 50HZ 1PH
COMPRESSOR L63A113DBEA	048259-58	1	2	512	380/415V 50HZ 3N~
DIAGRAM-WIRING *C708/C709*	057010-39	1		000	200V 50HZ 3PH - 200V 50/60HZ 3PH
DIAGRAM-WIRING *C708/C709*	057010-40	1		000	220/240V 50HZ 1PH
DIAGRAM-WIRING *C708/C709*	057010-58	1		000	380/415V 50HZ 3N~
DIAGRAM-WIRING *C716*	059900-39		1	000	200V 50HZ 3PH
DIAGRAM-WIRING *C716*	059900-40		1	000	220-240V 50HZ 1PH
DIAGRAM-WIRING *C716*	059900-58		1	000	380-415V 50HZ 3N~
HARNESS-WIRE *C712-C717*C	065436-40		1	103	220-240V 50HZ 1PH
HARNESS-WIRE-BEATER MOTOR	057725-33G	1		103	200V 50HZ 3PH - 200V 50/60HZ 3PH
HARNESS-WIRE-CAP/RELAY BO	057727-G	1		103	220-240V 50HZ 1PH
HARNESS-WIRE-CAP/RELAY BOX	057727-33	1		103	200V 50HZ 3PH - 200V 50/60HZ 3PH - 380/415V 50HZ 3N~
HARNESS-WIRE-COMP. H60-H63	059245-G	1		103	200V 50HZ 3PH - 200V 50/60HZ 3PH - 380/415V 50HZ 3N~
HARNESS-WIRE-MAIN POWER *C708*	058285-33G	1		103	200V 50HZ 3PH - 200V 50/60HZ 3PH
HARNESS-WIRE-MAIN POWER *C70	058285-40	1		103	220/240V 50HZ 1PH
HARNESS-WIRE-MAIN POWER *C708*	058285-58	1		103	380/415V 50HZ 3N~
HARNESS-WIRE-SOL VLV/FAN MTR	057726-G	1		103	200V 50HZ 3PH - 200V 50/60HZ 3PH - 220/240V 50HZ 1PH - 380/415V 50HZ 3N~
HARNESS-WIRE-BEATER MTR-3 PH	062053-33G		2	103	200V 50HZ 3PH - 380/415V 50HZ 3N~
HARNESS-WIRE-COMPRESSOR	062056-33G		2	103	200V 50HZ 3PH - 380/415V 50HZ 3N~

DESCRIPTION	PART NUMBER	C708 QTY.	C716 QTY.	WARR. CLASS	REMARKS
HARNESS-WIRE-SOLEN.C716/C717	066107-G		2	103	200V 50HZ 3PH - 220/240V 50HZ 1PH - 380/415V 50HZ 3N~
LABEL-3PH MTR PROT/1PH C-ENG/S	025949	1	1	000	380/415V 50HZ 3N~
LABEL-CK MTR ROTATE-CW-ENG/SPN	020090	1	1	000	380/415V 50HZ 3N~
LABEL-EQUIPOTENTIAL CONNECTOR	076406		2	000	200V 50HZ 3PH - 220/240V 50HZ 1PH - 380/415V 50HZ 3N~
MOTOR-1.5 HP	021522-33	1	2	212	200V 50HZ 3PH - 200V 50/60HZ 3PH
MOTOR-1.5 HP CAPS@8&10 O'CLOCK	056865-34	1		212	220/240V 50HZ 1PH
MOTOR-1.5 HP CAPS@10&2 O'CLOCK	021522-34		2	212	220/240V 50HZ 1PH
MOTOR-1.5 HP	021522-35	1	2	212	380/415V 50HZ 3N~
PCB A.-INTERFACE-HT-SS-UK ROHS	X63966-SER	1		212	200V 50HZ 3PH - 200V 50/60HZ 3PH - 220/240 50HZ 1PH - 380/415V 50HZ 3N~
PCB A.-ROHS-PERSONALITY-HT-SS	X63922-SER	1		212	
PCB A.-ROHS-INTF BASE-C708	X63928-SER	1		212	
CHIP-SOFTWARE MIX LEVEL	X40799-SER	1		103	
PULLEY-2AK27 X .625-.6265	011545	1	2	103	200V 50HZ 3PH - 220/240V 50HZ 1PH - 380/415V 50HZ 3N~
RELAY-START-COMPRESSOR	038146	1	2	103	220-240V 50HZ 1PH
STARTER-1 PHASE-4.5 TO 7 A	041950-27K		1	103	220-240V 50HZ 1PH
STARTER-3 PHASE-3 TO 5 AM	041950-33J	1	2	103	200V 50HZ 3PH - 200V 50/60HZ 3PH
STARTER-3 PHASE-2.0 TO 3.	041950-33H	1	2	103	380-415V 50HZ 3N~
C71660FAHR					220/380V 60HZ 3PH-4 WIRE W- HOPPER LOCKS
BLOCK-TERMINAL 4P L1,L2,L3,N	039424		1	103	
BOX-TOOL 15 INCH PLASTIC	058669		1	000	
COMPRESSOR L63A113DBEA	048259-58		2	512	
COLLAR-HOLDING .730DX.109 SLOT	019481		2	103	
+SCREW	001086		2	000	
+WASHER	002681		2	000	
DISPENSER A.-CUP-3 CONE	X63388		1	103	
HOLDER A.-LID *5472*	X42811		1	103	
JAR-SYRUP*PLASTIC*SHALLOW	036573		2	103	
JAR-SYRUP*STAINLESS*SHALLOW	036574		2	103	
KIT A.-HOPPER LOCK-TWIN 053809	X59106		1	103	
KIT A.-POWER CORD HANGER	X56533		1	000	
KIT A.-TUNE C716 SIMPL PUMP	X49463-82		1	000	
KIT A.-TOPPING PUMP SPARES	X53795		1	000	
LID-SYRUP JAR	042706		2	103	
LADLE-1 OZ-120D BEND IN HANDLE	033637-1		2	103	
MOTOR-2.0 HP	017650-33		1	212	

DESCRIPTION	PART NUMBER	C708 QTY.	C716 QTY.	WARR. CLASS	REMARKS
PANEL A.-FRONT-SYR RAIL *C716*	X63884-27		1	103	
PULLEY-2AK22-7/8	019987		2	103	
PUMP A.-SYRUP-HEATED-BRN	X53800-BRN		1	103	
PUMP A.-SYRUP-HEATED-TAN	X53800-TAN		1	103	
PUMP A.-MIX SIMPLIFIED S.S.	X57029-16		2	103	
TOOL-SHAFT-DRIVE-PUMP-HOPPER	057167		1	000	
TRAY-PARTS-PUMP-SIMPLIFIED	056525		2	000	
TRAY-PARTS-BARREL-3.4 QT*C71	067431		1	000	
OPTIONS					
ADAPTOR-HOSE	058690	*			
ADAPTOR-SPOUT-HOSE-DRAIN	063018		*		
CART	C20100-000	*			FOR *C706/C707/C708/C709*
CART - REAR DOOR	C20100-AFA	*			FOR *C706/C707/C708/C709*
DISPENSER A.-3CUP/2CONE D	X59380	*			
DISPENSER A.-CUP-3 CONE	X63388		*		
KIT A.-ART.FAUCET-TWIN/PU	X29301-SER		*		
KIT A.-CONE DISPENSER-2/D	X48464	*			
KIT A.-CONE DISPENSER-4 T	X41141	*			
KIT A.-DECAL-FLVRBRST C70	X59229-1	*			
KIT A.-DECAL-FLVRBRST C71	X62375-1		*		
KIT A.-DECAL-TWIST C712-C	X62375-2		*		
KIT A.-DECAL-VANILLA C708	X59229-2	*			
KIT A.-HOPPER LOCK SGL 05	X57847	*			
KIT A.-HOPPER LOCK-TWIN 0	X59106		*		
KIT A.-LOCK-DRAW VALVE-TW	X62504-SER		*		
KIT A.-LOCK-DRAW VLV-SGL	X62568	*			
KIT A.-SYR RAIL-SD MT-DUA	X48014-12H	*			
KIT A.-SYR RAIL-SD MT-DUA	X48014-27H	*			
KIT A.-SYRUP RAIL *C708*F	X59454	*			
KIT A.-SYRUP RAIL*C708* S	X59455-12	*			
KIT A.-SYRUP RAIL*C708* S	X59455-27	*			
KIT A.-SYRUP RAIL-C700S	X58699-27	*			
KIT A.-SYRUP RAIL-SD DUAL	X59455-27H	*			
KIT A.-SYRUP RAIL-SD MT-D	X59455-12H	*			
KIT A.-SYRUP RAIL-SIDE MO	X48014-12	*			

DESCRIPTION	PART NUMBER	C708 QTY.	C716 QTY.	WARR. CLASS	REMARKS
KIT A.-SYRUP RAIL-SIDE MO	X48014-27	*			
KIT A.-WIDE AMB.OPR *C708	X64171-SER	*			WIDE AMB KIT
LEG A.-4" WITH RUBBER CAP	X43408	*			
LEG-4" 3/8-16 STUD	036397	*			
PANEL A.-SIDE-RIGHT *C708	X57869-SER	*			TAD PANEL
SPINNER A.-PANEL *C706*SI	X62383-27	*			
TOOL-APPLICATION-ROLLER-D	059234	*			
TRANS.-B&B-1/2 KVA	016780	*			CHANGE TO 240V
TRAY-PARTS-BARREL-3.4 QT*	067431		*		
TRAY-PARTS-PUMP-SIMPLIFIE	056525	*			

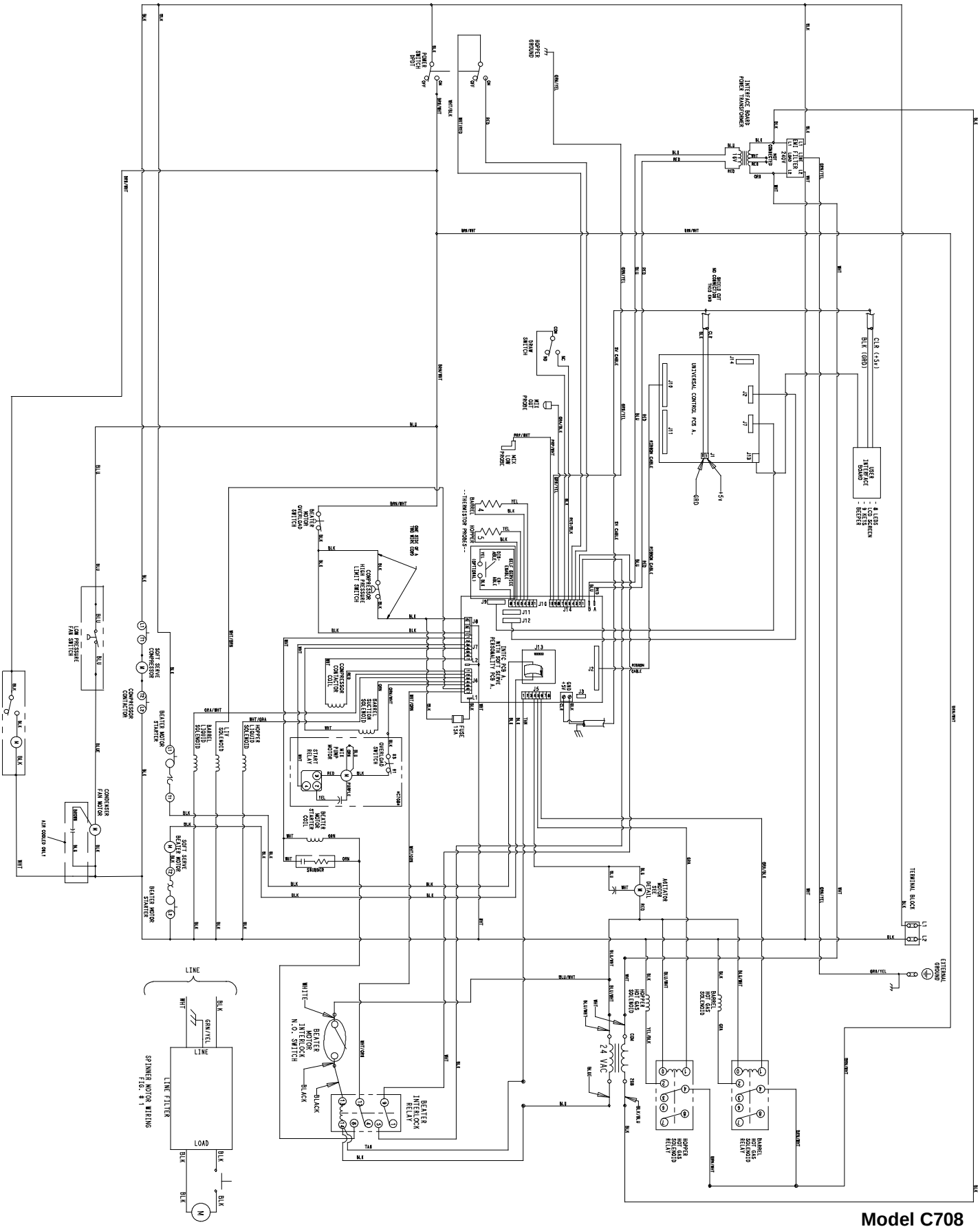

GROUND FRAME SECURELY

Model C708
057010-27
Rev. 2/08

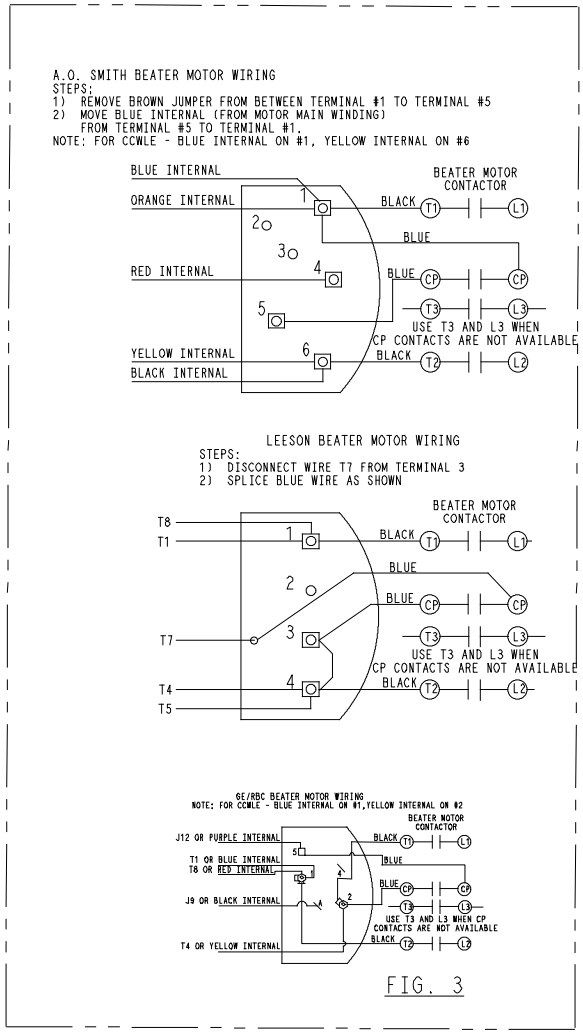

FIG. 3

JUMPER SETTINGS

	UVC3 BOARD	FUNCTION	JUMPER INSTALLED INITIALLY
JP1	PINS 1 AND 2	JUMPER INSTALLED- NORMAL APPLICATIONS USING REFRIGERATED MIX.	YES
	PINS 1 AND 2	NO JUMPER INSTALLED-GENERAL MARKET CONFIGURATION USING NON-REFRIGERATED MIX. IGNORES HOPPER TEMPERATURE LOCKOUT PARAMETERS TO ALLOW ADDING NON-REFRIGERATED MIX INTO THE HOPPER.	
	PINS 3 AND 4	JUMPER STORAGE	NO
JP2	PINS 1 AND 2	DOMESTIC CONFIGURATION-JUMPER INSTALLED. HOPPER TEMPERATURE NOT DISPLAYED ON SCREEN/HEAT SYMBOL KEYS ONLY ACTIVE WHEN A LOCKOUT CONDITION HAS OCCURRED/ STANDBY KEYS DISABLED.	YES
	PINS 1 AND 2	INTERNATIONAL CONFIGURATION-JUMPER NOT INSTALLED. HOPPER TEMPERATURES DISPLAYED ON SCREEN/MANUAL HEAT CYCLE START BY SELECTING HEAT SYMBOL/STANDBY KEYS FUNCTIONAL.	
	PINS 3 AND 4	JUMPER STORAGE	NO
JP3	PINS 1 AND 2	JUMPER INSTALLED ENABLES AUDIBLE DEVICE LOCATED ON UVC3 CONTROL. DISABLED IN MODELS THAT HAVE AN AUDIBLE DEVICE ON THE CONTROL PANEL BOARD.	NO
	PINS 3 AND 4	JUMPER STORAGE	NO

	INTERFACE BOARD	FUNCTION	JUMPER INSTALLED INITIALLY
W2			NO
W3			NO
W4			NO
W5			NO
A	SOFT SERVE PERSONALITY BOARD	0-6 AMP BEATER MOTOR AMPERAGE RANGE	NO
B	SOFT SERVE PERSONALITY BOARD	0-12 AMP BEATER MOTOR AMPERAGE RANGE	YES
J10	PINS 1 & 2	JUMPER INSTALLED-ENABLES 59°F PRODUCT TEMPERATURE CHECK.	CUSTOMER SPECIFIC

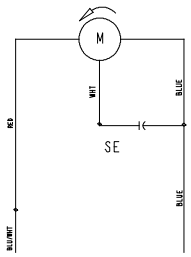

AGITATOR MOTOR DETAIL

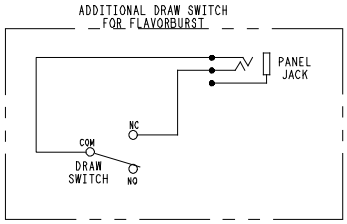

NOTE:

1. STATIC ELECTRICITY MAY CAUSE DAMAGE TO SOLID STATE COMPONENTS. ELIMINATE STATIC ELECTRICITY BY TOUCHING GROUNDED UNIT BEFORE HANDLING SOLID STATE COMPONENTS.

2. RED WIRE ON RIBBON CABLES MUST BE CONNECTED TO PIN 1 AT EACH END.

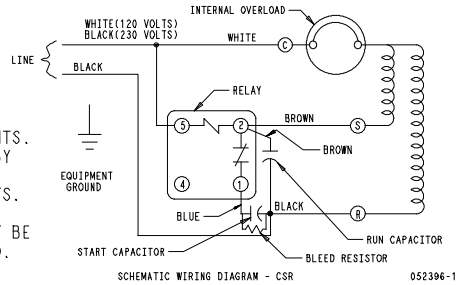

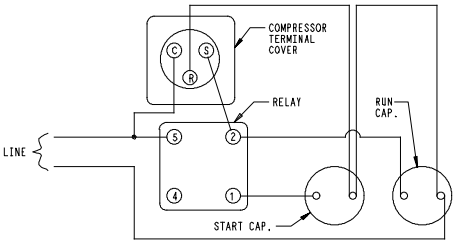

ABOVE ELECTRICAL DIAGRAM SHOWS WIRING NECESSARY TO HOOK UP A COMPRESSOR USING A START AND RUN CAPACITOR (CSR) WITH A RELAY.

GROUND FRAME SECURELY

Model C708
057010-27
Inset
Rev. 2/08

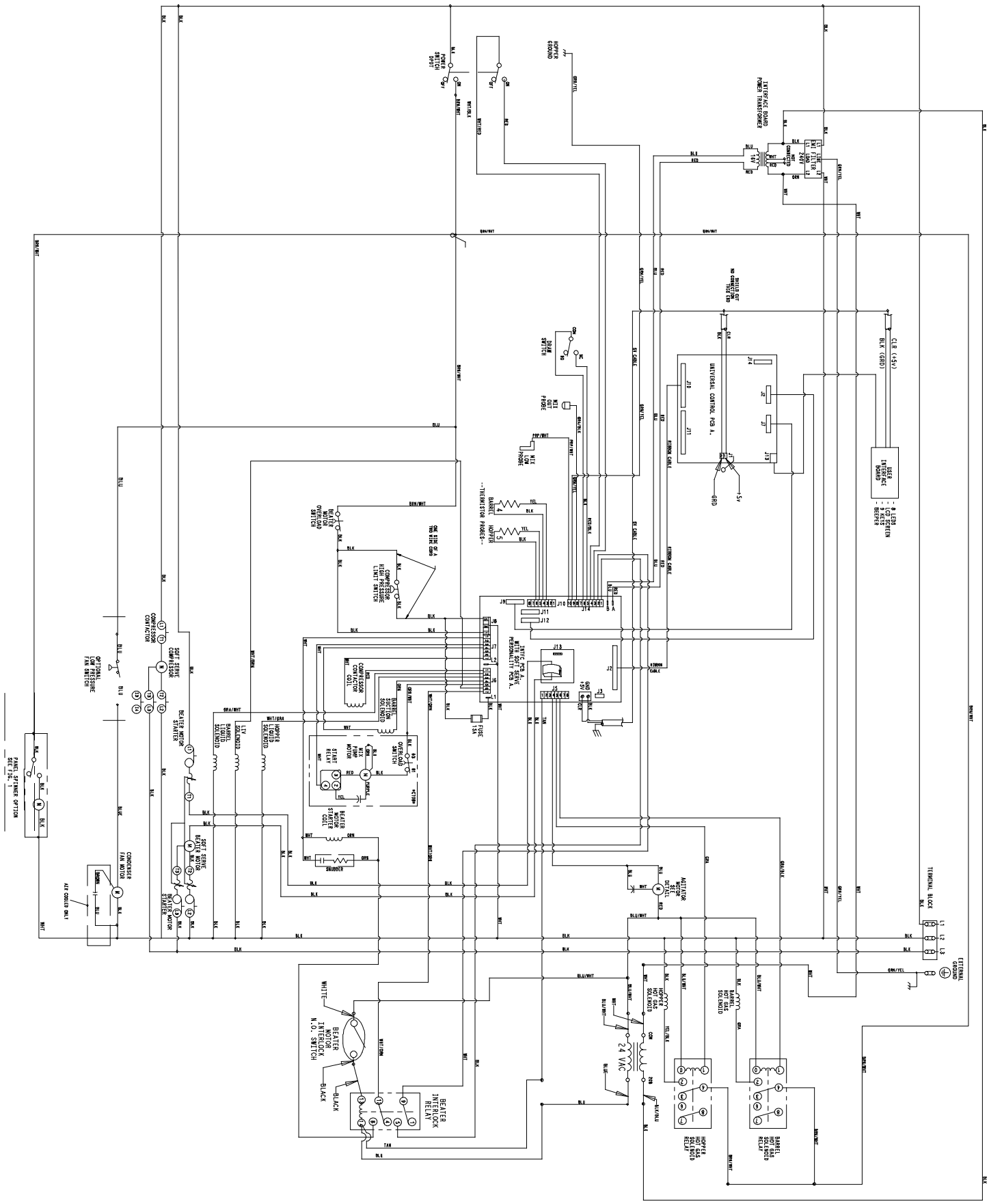
INTERFACE BOARD POWER TRANSFORMER
EMI FILTER
LINE 1
LINE 2
NEUTRAL
HOT CONNECTED
120V
240V
POWER DISTRIBUTION BOARD
HOPPER GROUND
ON
OFF
UNIVERSAL CONTROL PCB A.
J14
J10
J11
J2
J1
J13
-GRD
+5v
CLK (+5v)
BLK (GRD)
USER INTERFACE BOARD
- - - -

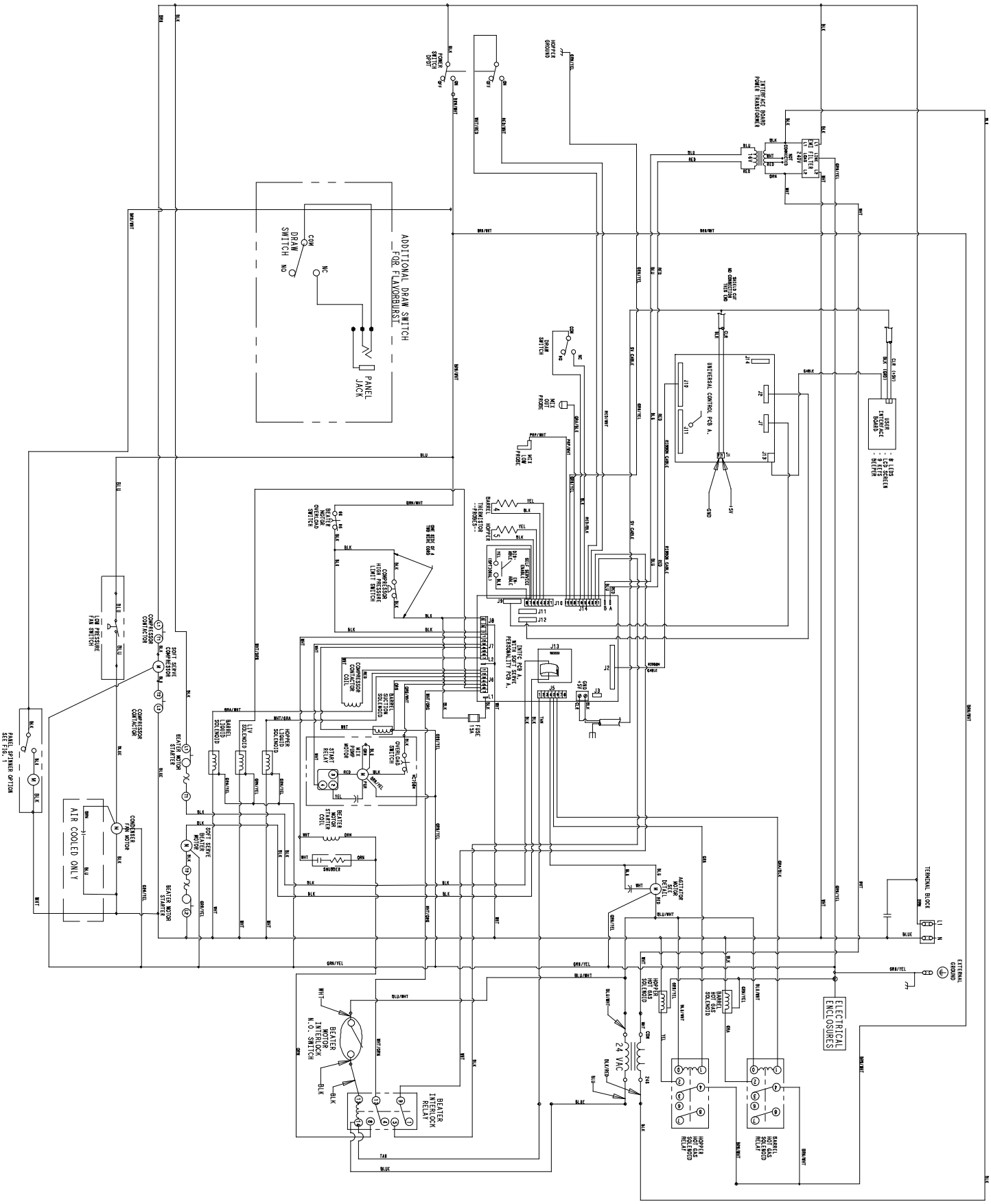

GROUND FRAME SECURELY

Model C708
057010-40
Rev. 2/08

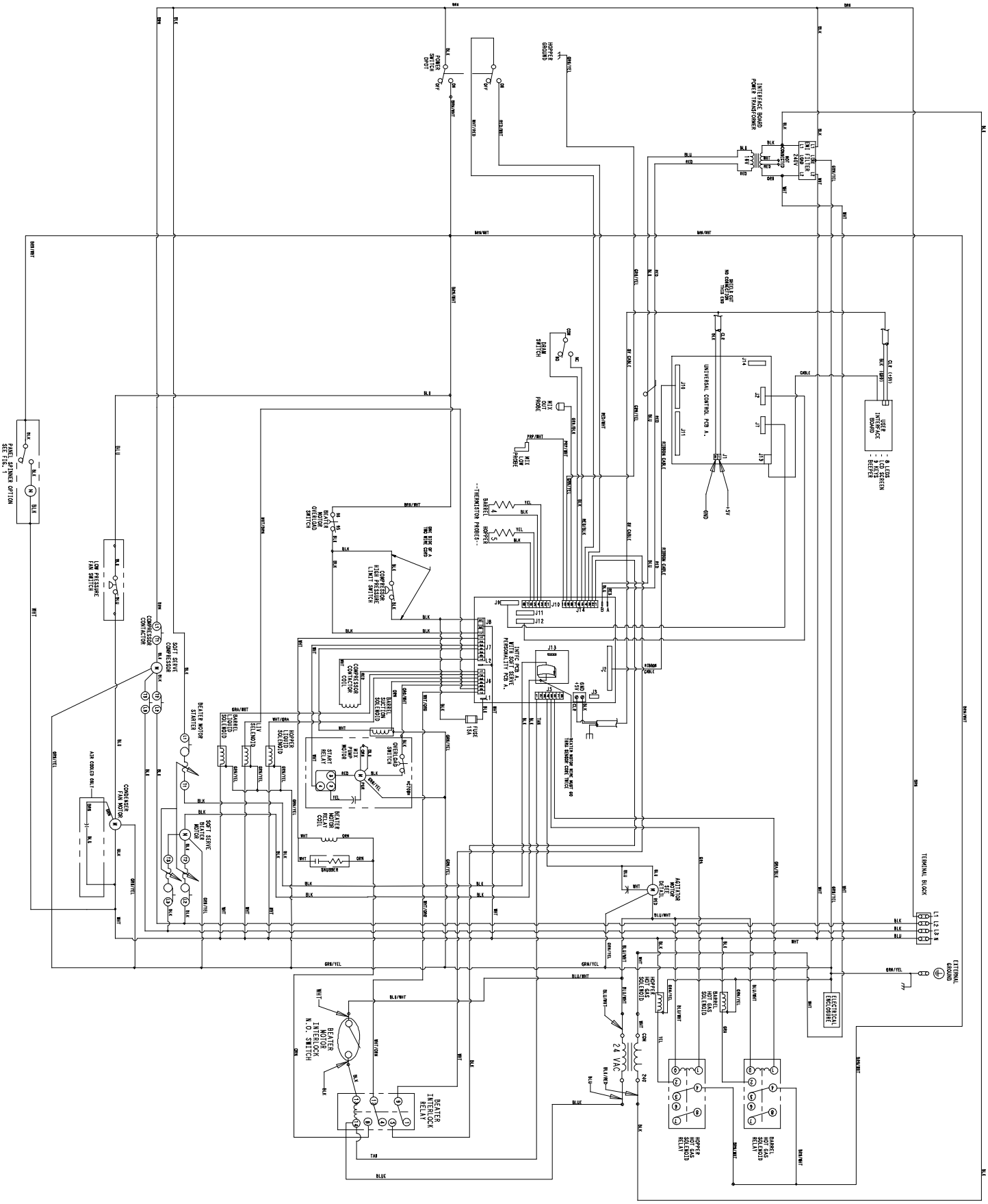

GROUND FRAME SECURELY

Model C708
057010-58
Rev. 2/08

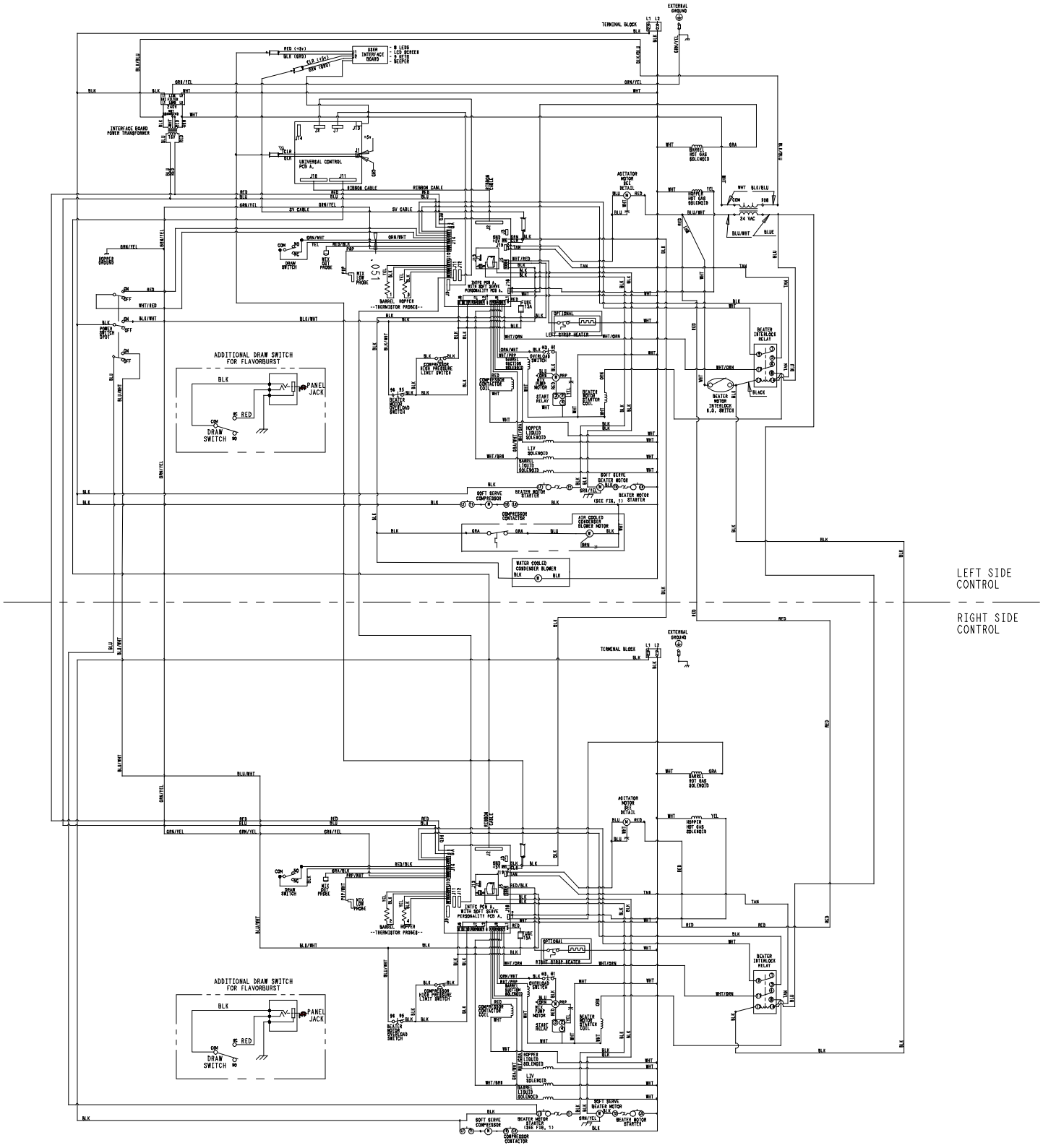

Model C716
059900-27
Rev. 2/08

	UVC3 BOARD	FUNCTION	JUMPER INSTALLED INITIALLY
JP1	PINS 1 AND 2	JUMPER INSTALLED- NORMAL APPLICATIONS USING REFRIGERATED MIX.	YES
	PINS 1 AND 2	NO JUMPER INSTALLED-GENERAL MARKET CONFIGURATION USING NON-REFRIGERATED MIX. IGNORES HOPPER TEMPERATURE LOCKOUT PARAMETERS TO ALLOW ADDING NON-REFRIGERATED MIX INTO THE HOPPER.	
	PINS 3 AND 4	JUMPER STORAGE	NO
JP2	PINS 1 AND 2	DOMESTIC CONFIGURATION-JUMPER INSTALLED. HOPPER TEMPERATURE NOT DISPLAYED ON SCREEN/HEAT SYMBOL KEYS ONLY ACTIVE WHEN A LOCKOUT CONDITION HAS OCCURRED/ STANDBY KEYS DISABLED.	YES
	PINS 1 AND 2	INTERNATIONAL CONFIGURATION-JUMPER NOT INSTALLED. HOPPER TEMPERATURES DISPLAYED ON SCREEN/MANUAL HEAT CYCLE START BY SELECTING HEAT SYMBOL/STANDBY KEYS FUNCTIONAL.	
	PINS 3 AND 4	JUMPER STORAGE	NO
JP3	PINS 1 AND 2	JUMPER INSTALLED ENABLES AUDIBLE DEVICE LOCATED ON UVC3 CONTROL. DISABLED IN MODELS THAT HAVE AN AUDIBLE DEVICE ON THE CONTROL PANEL BOARD.	NO
	PINS 3 AND 4	JUMPER STORAGE	NO

	LEFT INTERFACE BOARD	FUNCTION	JUMPER INSTALLED INITIALLY
W2			NO
W3		JUMPER INSTALLED-ACTIVATES SYRUP HEATERS	NO*
W4			NO
W5			NO
A	SOFT SERVE PERSONALITY BOARD	0-6 AMP BEATER MOTOR AMPERAGE RANGE	NO
B	SOFT SERVE PERSONALITY BOARD	0-12 AMP BEATER MOTOR AMPERAGE RANGE	YES

	RIGHT INTERFACE BOARD	FUNCTION	JUMPER INSTALLED INITIALLY
W2		JUMPER INSTALLED-ENABLES 59°F PRODUCT TEMPERATURE CHECK.	YES
W3			NO
W4			NO
W5			NO
A	SOFT SERVE PERSONALITY BOARD	0-6 AMP BEATER MOTOR AMPERAGE RANGE	NO
B	SOFT SERVE PERSONALITY BOARD	0-12 AMP BEATER MOTOR AMPERAGE RANGE	YES

*IF THE UNIT HAS THE INTEGRAL SYRUP OPTION -405, THEN THIS JUMPER SHOULD BE INSTALLED.

NOTE:

1. STATIC ELECTRICITY MAY CAUSE DAMAGE TO SOLID STATE COMPONENTS. ELIMINATE STATIC ELECTRICITY BY TOUCHING GROUNDED UNIT BEFORE HANDLING SOLID STATE COMPONENTS.
2. RED WIRE ON RIBBON CABLES MUST BE CONNECTED TO PIN 1 AT EACH END.

GE/RBC BEATER MOTOR WIRING
NOTE: FOR CCWLE - BLUE INTERNAL ON #1,YELLOW INTERNAL ON #2

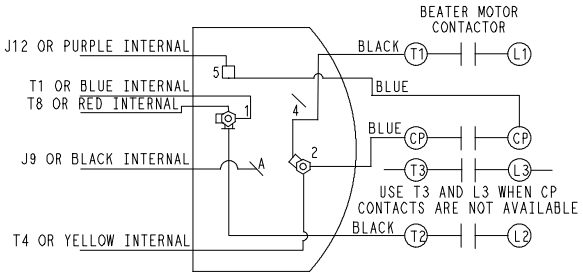

A.O. SMITH BEATER MOTOR WIRING

STEPS:
1) REMOVE BROWN JUMPER FROM BETWEEN TERMINAL #1 TO TERMINAL #5
2) MOVE BLUE INTERNAL (FROM MOTOR MAIN WINDING) FROM TERMINAL #5 TO TERMINAL #1.

NOTE: FOR CCWLE - BLUE INTERNAL ON #1, YELLOW INTERNAL ON #6

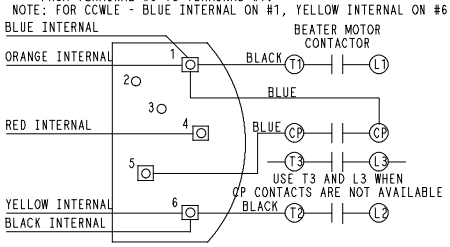

LEESON BEATER MOTOR WIRING

STEPS:
1) DISCONNECT WIRE T7 FROM TERMINAL 3
2) SPLICE BLUE WIRE AS SHOWN

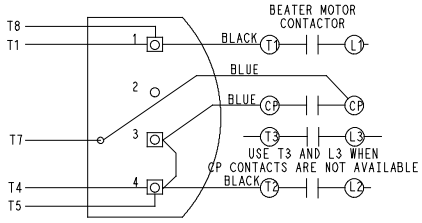

FIG. 1

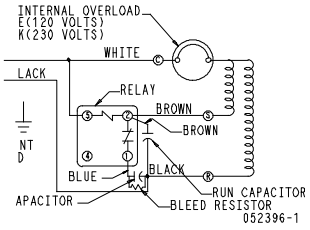

C WIRING DIAGRAM - CSR

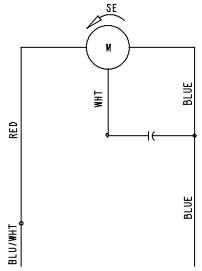

AGITATOR MOTOR DETAIL

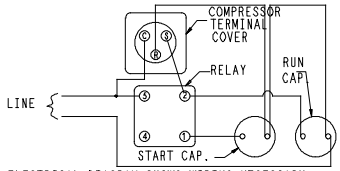

ABOVE ELECTRICAL DIAGRAM SHOWS WIRING NECESSARY TO HOOK UP A COMPRESSOR USING A START AND RUN CAPACITOR (CSR) WITH A RELAY.

GROUND FRAME SECURELY

Model C716
059900-27
Inset
Rev. 2/08

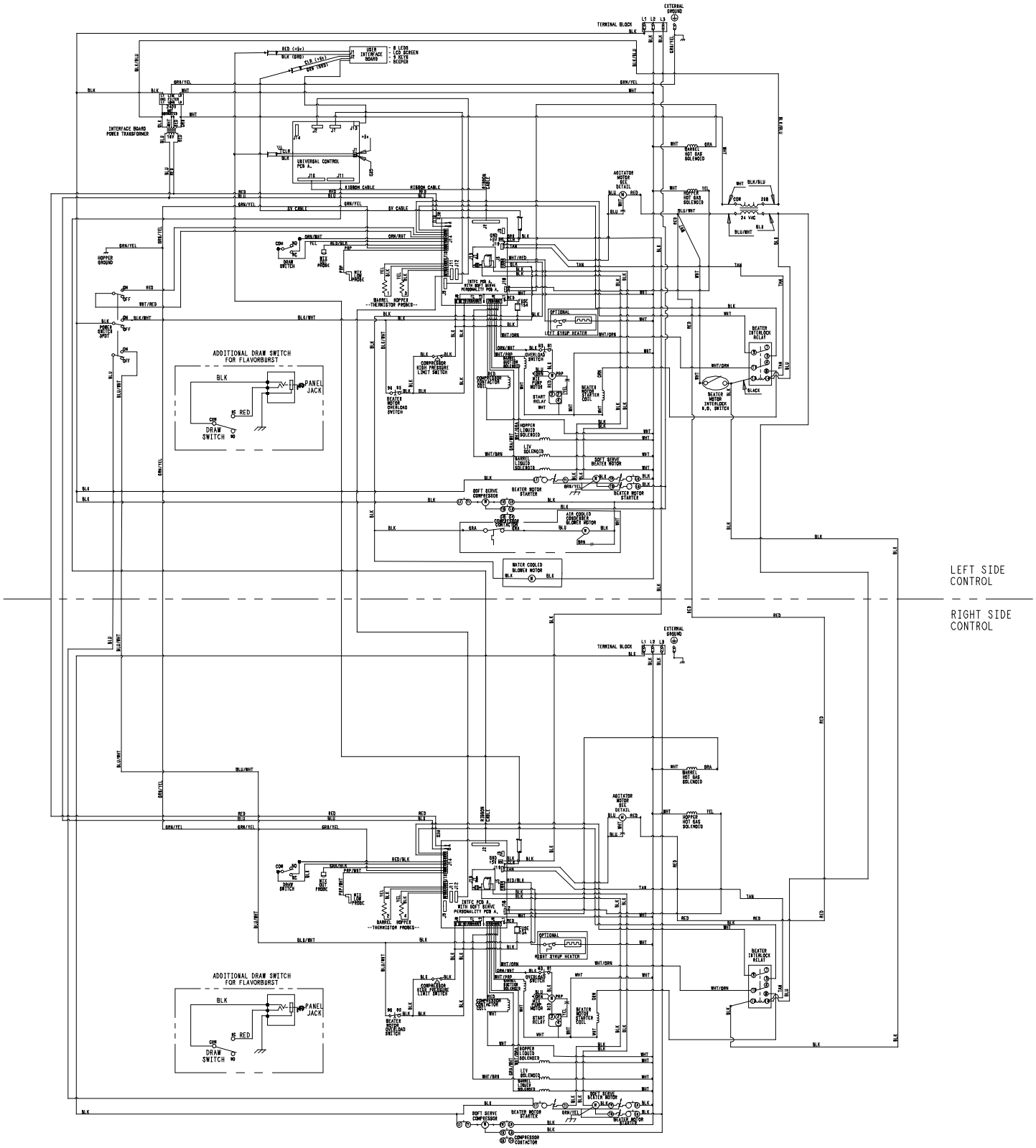

GROUND FRAME SECURELY

Model C716
059900-33
Rev. 2/08

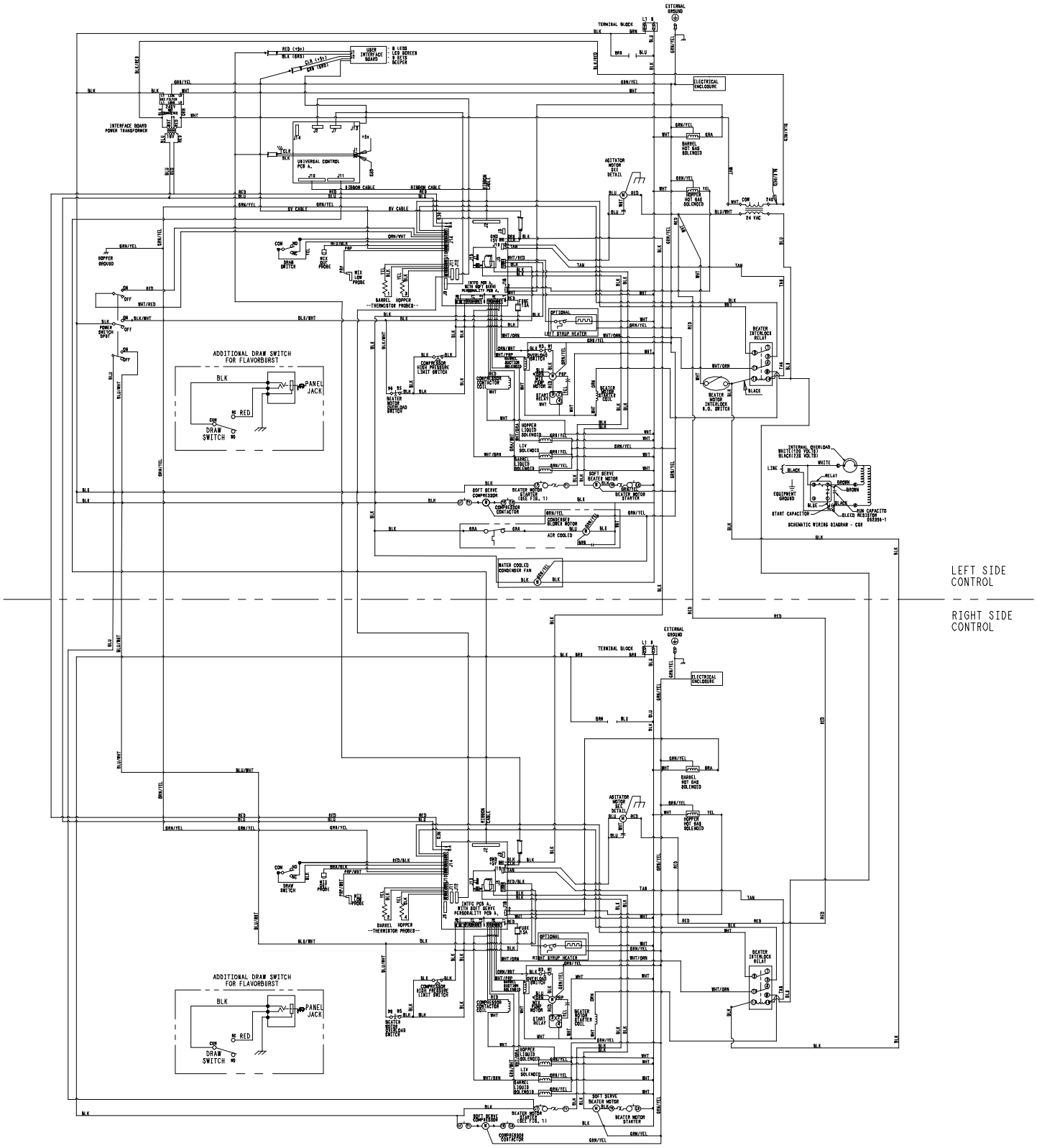

GROUND FRAME SECURELY

Model C716
059900-40
Rev. 2/08

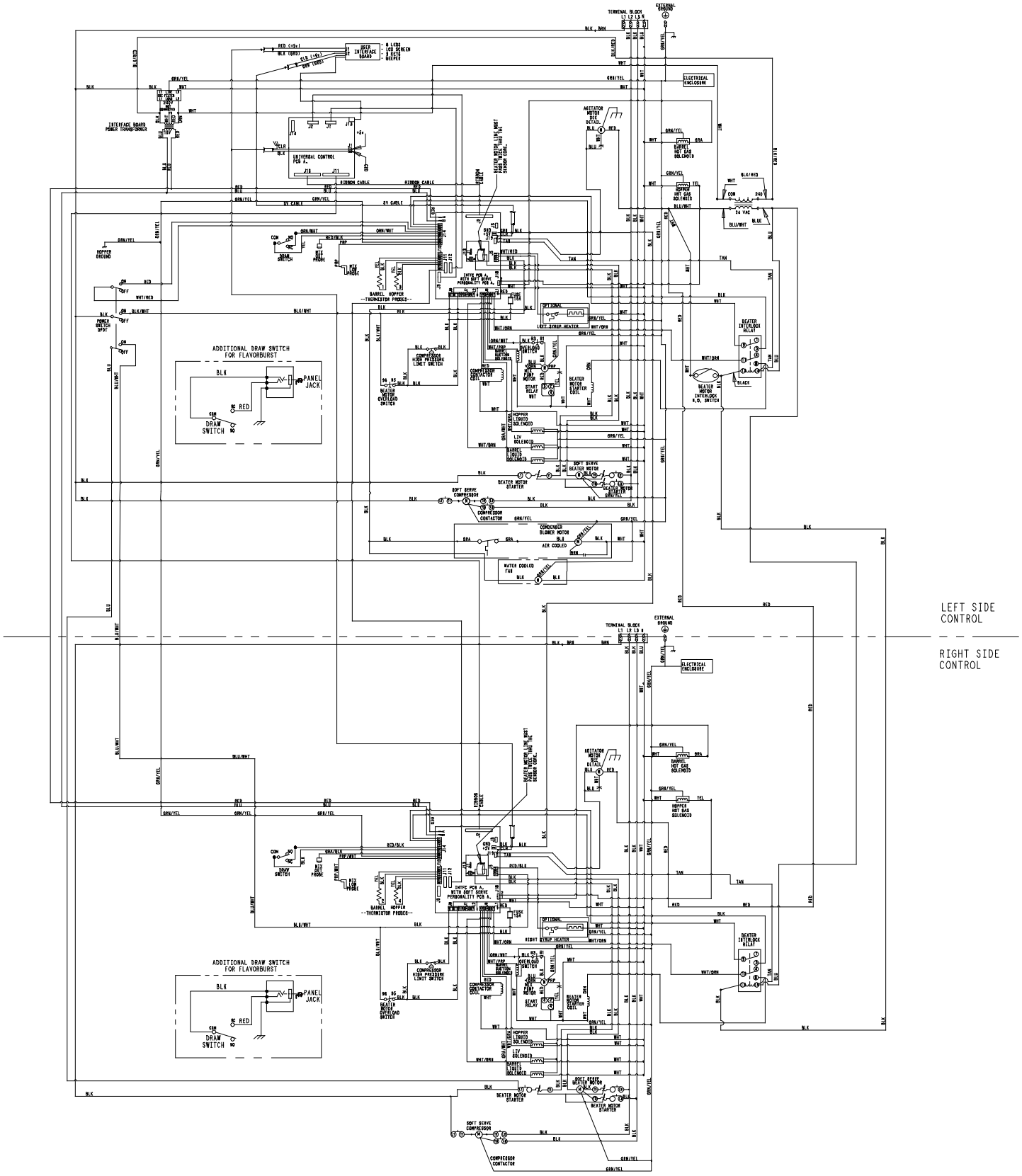

Model C716
059900-58
Rev. 2/08