L11DIV High Powered Benchtop Cutter Processor

YAZICILAR®

Main Features

- Powerful enough for the thickest mixtures
- Flexible: you control the speed for every application during processing
- The inverter inside allows maximum power and durability for years to come
- Powerful AC motor with inverter drive
- Bowl scraper attachment standard
- Liquid proof operation thanks to the extended bowl shaft, silicon seal and cover
- Highest liquid capacity in the industry
- Total stainless steel construction: dishwasher safe parts

The Hummus Master by Yazicilar is powerful enough for the thickest mixtures and totally flexible, giving you full control of the speed for every application. The inverter inside allows maximum power to be transferred and durability for years to come utilizing the most advanced technology for variable speed control.

DIMENSIONS

External Width	260
External Height	625
External Depth	410

SPECIFICATIONS

Voltage	230-240 volts, 50/60 Hz EN
Power	2200 Watts
Plug Supplied	Yes, 10 amp plug
Capacity	11 litres
Speed	600-3000 rpm
Capacity/Batch	4 kg (product)
Capacity/Hour	60 kg (product)
Weight	38 kg
Warranty	4 Year Parts & 2 Years Labour (Asset must be registered to activate full warranty)

THE GOOD LADY

Phone: 1800 183 818 | Email: support@thegoodlady.com.au
Website: www.thegoodlady.com.au

TOP

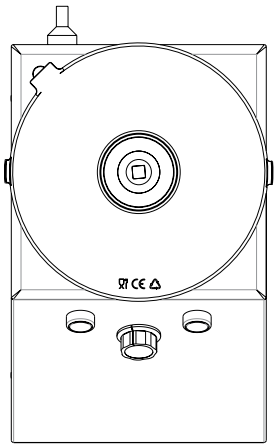

FRONT

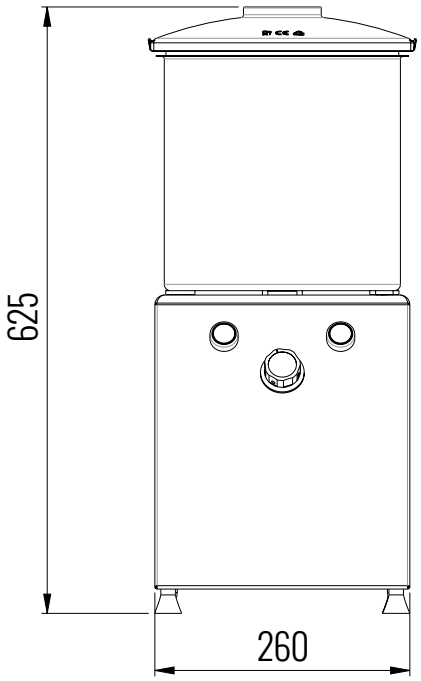

SIDE

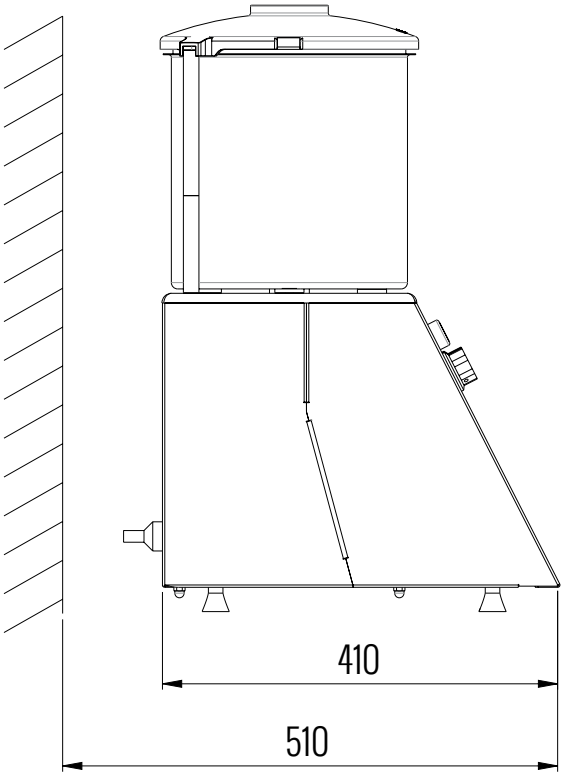

PERSPECTIVE

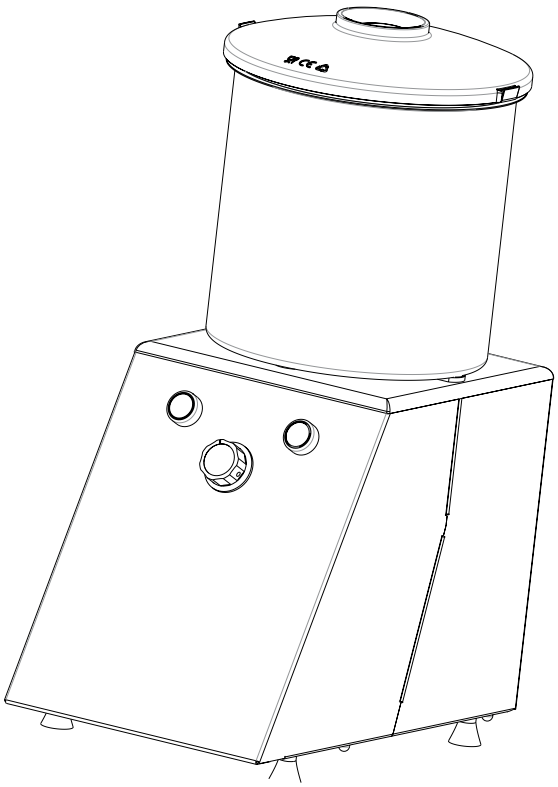

We reserve the right to alter specifications without notice.