OPERATOR'S MANUAL

Model C001 & C002 Custard Freezers

Original Operating Instructions

055073-M

5/28/08 (Original Publication)
(Updated 9/22/14)

Complete this page for quick reference when service is required:

Taylor Distributor:_____

Address:_____

Phone:_____

Fax:_____

E-mail:_____

Service:_____

Parts:_____

Date of Installation:_____

Information found on the data label:

Model Number:_____

Serial Number:_____

Electrical Specs: Voltage_____Cycle_____

Phase_____

Maximum Fuse Size:_____A

Minimum Wire Ampacity:_____A

© 2008 Carrier Commercial Refrigeration, Inc.
055073-M
Any unauthorized reproduction, disclosure, or distribution of copies by any person of any portion of this work may be a violation of Copyright Law of the United States of America and other countries, could result in the awarding of Statutory Damages of up to $250,000 (17 USC 504) for infringement, and may result in further civil and criminal penalties.
All rights reserved.

Taylor Company
a division of Carrier Commercial Refrigeration, Inc.
750 N. Blackhawk Blvd.
Rockton, IL 61072

Table of Contents

Section 1 To the Installer 1

Installer Safety 1
Site Preparation 1
Air Cooled Units 1
Water Connections (Water Cooled Units Only) 2
Electrical Connections 2
Dasher (Beater) Rotation 3
Refrigerant 3

Section 2 To the Operator 4

Section 3 Safety 5

Section 4 Operator Parts Identification 8

C001 Exploded View 8
C002 Exploded View 10
Dasher (Beater) and Door Assembly 12
Accessories 13

Section 5 Important: To the Operator 14

C001 14
C002 15
Symbol Definitions 16

Section 6 Operating Procedures 17

Assembly 17
Sanitizing 20
Priming for Continuous Run 21
Stopping a Continuous Run for a Short Period of Time 22
To Restart the Continuous Run: 22
Closing Procedure 22
Draining Product From The Freezing Cylinder 23
Rinsing 23
Cleaning 24

Disassembly 24
Brush Cleaning 24
Section 7 Important: Operator Checklist 26
During Cleaning and Sanitizing 26
Troubleshooting Bacterial Count 26
Regular Maintenance Checks 26
Winter Storage 27
Section 8 Troubleshooting Guide 28
Section 9 Parts Replacement Schedule 31
Section 10 Limited Warranty on Equipment 32
Section 11 Limited Warranty on Parts 34
Wiring Diagrams 37

Note: Continuing research results in steady improvements; therefore, information in this manual is subject to change without notice.

Note: Only instructions originating from the factory or its authorized translation representative(s) are considered to be the original set of instructions.

© 2008 Carrier Commercial Refrigeration, Inc. (Original Publication)
(Updated September, 2014)
055073- M
Any unauthorized reproduction, disclosure, or distribution of copies by any person of any portion of this work may be a violation of Copyright Law of the United States of America and other countries, could result in the awarding of Statutory Damages of up to $250,000 (17 USC 504) for infringement, and may result in further civil and criminal penalties.
All rights reserved.

Taylor Company
a division of Carrier Commercial Refrigeration, Inc.
750 N. Blackhawk Blvd.
Rockton, IL 61072

Section 1 To the Installer

The following information has been included in the manual as safety and regulatory guidelines. For complete installation instructions, please see the Installation Checklist.

Installer Safety

In all areas of the world, equipment should be installed in accordance with existing local codes. Please contact your local authorities if you have any questions.

Care should be taken to ensure that all basic safety practices are followed during the installation and servicing activities related to the installation and service of Taylor equipment.

- Only authorized Taylor service personnel should perform installation and repairs on the equipment.
- Authorized service personnel should consult OSHA Standard 29CFRI910.147 or the applicable code of the local area for the industry standards on lockout/tagout procedures before beginning any installation or repairs.
- Authorized service personnel must ensure that the proper PPE is available and worn when required during installation and service.
- Authorized service personnel must remove all metal jewelry, rings, and watches before working on electrical equipment.

The main power supply(s) to the freezer must be disconnected prior to performing any repairs. Failure to follow this instruction may result in personal injury or death from electrical shock or hazardous moving parts as well as poor performance or damage to the equipment.

Note: All repairs must be performed by an authorized Taylor Service Technician.

This unit has many sharp edges that can cause severe injuries.

Site Preparation

Review the area where the unit will be installed before uncrating the unit. Make sure all possible hazards to the user or equipment have been addressed.

For Indoor Use Only: This unit is designed to operate indoors, under normal ambient temperatures of 70°-75°F (21°-24°C). The freezer has successfully performed in high ambient temperatures of 104°(40°C) at reduced capacities.

This unit must **NOT** be installed in an area where a water jet or hose can be used. **NEVER** use a water jet or hose to rinse or clean the unit. Failure to follow this instruction may result in electrocution.

This unit must be installed on a level surface to avoid the hazard of tipping. Extreme care should be taken in moving this equipment for any reason. Two or more persons are required to safely move this unit. Failure to comply may result in personal injury or equipment damage.

Uncrate the unit and inspect it for damage. Report any damage to your Taylor Distributor.

This piece of equipment is made in the USA and has USA sizes of hardware. All metric conversions are approximate and vary in size.

Air Cooled Units

DO NOT obstruct air intake and discharge openings:

Air cooled units require a minimum of 3” (76 mm) of clearance around **all** sides of the freezer. Install the deflector provided to prevent recirculation of warm air. Failure to allow adequate clearance can reduce the refrigeration capacity of the freezer and possibly cause permanent damage to the compressors.

131122

Water Connections

(Water Cooled Units Only)

An adequate cold water supply must be provided with a hand shut- off valve. On the underside rear of the base pan, two 1/2" (13 mm) I.P.S. water connections for inlet and outlet have been provided for easy hook- up. 1/2" (13 mm) inside diameter water lines should be connected to the unit. (Flexible lines are recommended, if local codes permit.) Depending on local water conditions, it may be advisable to install a water strainer to prevent foreign substances from clogging the automatic water valve. There will be only one water "in" and one water "out" connection. DO NOT install a hand shut- off valve on the water "out" line! Water should always flow in this order: first, through the automatic water valve; second, through the condenser; and third, through the outlet fitting to an **open trap drain.**

A back flow prevention device is required on the incoming water connection side. Please refer to the applicable National, State, and local codes for determining the proper configuration.

Electrical Connections

In the United States, this equipment is intended to be installed in accordance with the National Electrical Code (NEC), ANSI/NFPA 70- 1987. The purpose of the NEC code is the practical safeguarding of persons and property from hazards arising from the use of electricity. This code contains provisions considered necessary for safety. Compliance therewith and proper maintenance will result in an installation essentially free from hazard!

In all other areas of the world, equipment should be installed in accordance with the existing local codes. Please contact your local authorities.

FOLLOW YOUR LOCAL ELECTRICAL CODES!

Each freezer requires two dedicated electrical connections. Check the data label(s) on the freezer for branch circuit overcurrent protection or fuse, circuit ampacity and electrical specifications. Refer to the wiring diagram provided inside of the electrical box, for proper power connections.

CAUTION: THIS EQUIPMENT MUST BE PROPERLY GROUNDED! FAILURE TO DO SO CAN RESULT IN SEVERE PERSONAL INJURY FROM ELECTRICAL SHOCK!

This unit is provided with an equipotential grounding lug that is to be properly attached to the rear of the frame by the authorized installer. The installation location is marked by the equipotential bonding symbol (5021 of IEC 60417-1) on both the removable panel and the equipment's frame.

- Stationary appliances which are not equipped with a power cord and a plug or another device to disconnect the appliance from the power source must have an all-pole disconnecting device with a contact gap of at least 3 mm installed in the external installation.
- Appliances that are permanently connected to fixed wiring and for which leakage currents may exceed 10 mA, particularly when disconnected or not used for long periods, or during initial installation, shall have protective devices such as a GFI, to protect against the leakage of current, installed by the authorized personnel to the local codes.
- Supply cords used with this unit shall be oil-resistant, sheathed flexible cable not lighter than ordinary polychloroprene or other equivalent synthetic elastomer-sheathed cord (Code designation 60245 IEC 57) installed with the proper cord anchorage to relieve conductors from strain, including twisting, at the terminals and protect the insulation of the conductors from abrasion.

  If the supply cord is damaged, it must be replaced by an authorized Taylor service technician in order to avoid a hazard.

Dasher (Beater) Rotation

Dasher rotation must be clockwise as viewed looking into the freezing cylinder. As a safety feature, the dasher will not operate without the freezer door in place.

Note: The following procedures must be performed by an authorized Taylor service technician.

To correct the rotation on a three- phase unit, interchange any two incoming power supply lines at freezer main terminal block only.

To correct rotation on a single- phase unit, change the leads inside the dasher motor. (Follow the diagram printed on the motor.)

Electrical connections are made directly to the terminal block. The terminal block is provided in the control box located behind the lower front panel.

Refrigerant

In consideration of our environment, Taylor proudly uses only earth friendly HFC refrigerants. The HFC refrigerant used in this unit is R404A. This refrigerant is generally considered non-toxic and non-flammable, with an Ozone Depleting Potential (ODP) of zero (0).

However, any gas under pressure is potentially hazardous and must be handled with caution.

NEVER fill any refrigerant cylinder completely with liquid. Filling the cylinder to approximately 80% will allow for normal expansion.

Use only R404A refrigerant that conforms to the AHRI standard 700 specification. The use of any other refrigerant may expose users and operators to unexpected safety hazards.

Refrigerant liquid sprayed onto the skin may cause serious damage to tissue. Keep eyes and skin protected. If refrigerant burns should occur, flush immediately with cold water. If burns are severe, apply ice packs and contact a physician immediately.

Taylor reminds technicians to be cautious of government laws regarding refrigerant recovery, recycling, and reclaiming systems. If you have any questions regarding these laws, please contact the factory Service Department.

WARNING: R404A refrigerant used in conjunction with polyolester oils is extremely moisture absorbent. When opening a refrigeration system, the maximum time the system is open must not exceed 15 minutes. Cap all open tubing to prevent humid air or water from being absorbed by the oil.

131021

Section 2 To the Operator

The freezer you have purchased has been carefully engineered and manufactured to give you dependable operation. The Taylor freezer, when properly operated and cared for, will produce a consistent quality product. Like all mechanical products, this machine will require cleaning and maintenance. A minimum amount of care and attention is necessary if the operating procedures outlined in this manual are followed closely.

This Operator's Manual should be read before operating or performing any maintenance on your equipment.

Your Taylor freezer will NOT eventually compensate and correct for any errors during the set- up or filling operations. Thus, the initial assembly and priming procedures are of extreme importance. It is strongly recommended that all personnel responsible for the equipment's operation review these procedures in order to be properly trained and to make sure that there is no confusion.

In the event that you should require technical assistance, please contact your local authorized Taylor Distributor.

Note: Your Taylor warranty is valid only if the parts are authorized Taylor parts, purchased from the local authorized Taylor Distributor, and only if all required service work is provided by an authorized Taylor service technician. Taylor reserves the right to deny warranty claims on units or parts if non- Taylor approved parts or incorrect refrigerant were installed in the unit, system modifications were performed beyond factory recommendations, or it is determined that the failure was caused by abuse, misuse, neglect, or failure to follow all operating instructions. For full details of your Taylor Warranty, please see the Limited Warranty section in this manual.

Note: Constant research results in steady improvements; therefore, information in this manual is subject to change without notice.

If the crossed out wheeled bin symbol is affixed to this product, it signifies that this product is compliant with the EU Directive as well as other similar legislation in effect after August 13, 2005. Therefore, it must be collected separately after its use is completed, and cannot be disposed as unsorted municipal waste. The user is responsible for returning the product to the appropriate collection facility, as specified by the local code.

For additional information regarding applicable local laws, please contact the municipal facility and/or local distributor.

Compressor Warranty Disclaimer

The refrigeration compressor(s) on this unit are warranted for the term stated in the Limited Warranty section in this manual. However, due to the Montreal Protocol and the U.S. Clean Air Act Amendments of 1990, many new refrigerants are being tested and developed, thus seeking their way into the service industry. Some of these new refrigerants are being advertised as drop- in replacements for numerous applications. It should be noted that in the event of ordinary service to this unit's refrigeration system, **only the refrigerant specified on the affixed data label should be used**. The unauthorized use of alternate refrigerants will void your Taylor compressor warranty. It is the unit owner's responsibility to make this fact known to any technician he employs.

It should also be noted that Taylor does not warrant the refrigerant used in its equipment. For example, if the refrigerant is lost during the course of ordinary service to this machine, Taylor has no obligation to either supply or provide its replacement either at billable or unbillable terms. Taylor does have the obligation to recommend a suitable replacement if the original refrigerant is banned, obsoleted, or no longer available during the five year warranty of the compressor.

The Taylor Company will continue to monitor the industry and test new alternates as they are being developed. Should a new alternate prove, through our testing, that it would be accepted as a drop- in replacement, then the above disclaimer would become null and void. To find out the current status of an alternate refrigerant as it relates to your compressor warranty, call the local Taylor Distributor or the Taylor Factory. Be prepared to provide the Model/Serial Number of the unit in question.

131122

Section 3 Safety

We, at Taylor Company, are concerned about the safety of the operator when he or she comes in contact with the freezer and its parts. Taylor has gone to extreme efforts to design and manufacture built-in safety features to protect both you and the service technician. As an example, warning labels have been attached to the freezer to further point out safety precautions to the operator.

IMPORTANT - Failure to adhere to the following safety precautions may result in severe personal injury or death. Failure to comply with these warnings may damage the machine and its components. Component damage will result in part replacement expense and service repair expense.

DO NOT operate the freezer without reading this Operator Manual. Failure to follow this instruction may result in equipment damage, poor freezer performance, health hazards, or personal injury.

This unit is to be used only by trained personnel. It is not intended for use by children or people with reduced physical, sensory, or mental capabilities, or lack of experience and knowledge. Where limited equipment operation is allowed for public use, such as a self-serve application, supervision or instruction concerning the use of the appliance by a person responsible for their safety is required. Children should be supervised to ensure that they do not play with the appliance.

This unit is provided with an equipotential grounding lug that is to be properly attached to the rear of the frame by the authorized installer. The installation location is marked by the equipotential bonding symbol (5021 of IEC 60417-1) on both the removable panel and the equipment's frame.

DO NOT use a water jet to clean or rinse the freezer. Failure to follow these instructions may result in serious electrical shock.

- **DO NOT** operate the freezer unless it is properly grounded.
- **DO NOT** operate the freezer with larger fuses than specified on the freezer data label.
- All repairs must be performed by an authorized Taylor service technician. The main power supplies to the machine must be disconnected prior to performing any repairs.
- Cord Connected Units: Only Taylor authorized service technicians may install a plug on this unit.
- Stationary appliances which are not equipped with a power cord and a plug or another device to disconnect the appliance from the power source must have an all-pole disconnecting device with a contact gap of at least 3 mm installed in the external installation.
- Appliances that are permanently connected to fixed wiring and for which leakage currents may exceed 10 mA, particularly when disconnected or not used for long periods, or during initial installation, shall have protective devices such as a GFI, to protect against the leakage of current, installed by the authorized personnel to the local codes.
- Supply cords used with this unit shall be oil-resistant, sheathed flexible cable not lighter than ordinary polychloroprene or other equivalent synthetic elastomer-sheathed cord (Code designation 60245 IEC 57) installed with the proper cord anchorage to relieve conductors from strain, including twisting, at the terminals and protect the insulation of the conductors from abrasion.

  If the supply cord is damaged, it must be replaced by an authorized Taylor service technician in order to avoid a hazard.

Failure to follow these instructions may result in electrocution. Contact your local authorized Taylor Distributor for service.

131021

- **DO NOT** allow untrained personnel to operate this machine.
- **DO NOT** operate the freezer unless all service panels and access doors are restrained with screws.
- **DO NOT** remove the door, dasher, scraper blades, or drive shaft unless the power switch is in the OFF position.

Failure to follow these instructions may result in contaminated product or severe personal injury to fingers or hands from hazardous moving parts.

This unit has many sharp edges that can cause severe injuries.

- **DO NOT** put objects or fingers in the door opening. This may contaminate the product and cause severe personal injury from blade contact.
- **USE EXTREME CAUTION** when removing the dasher assembly. The scraper blades are very sharp and may cause injury.

This freezer must be placed on a level surface. Failure to comply may result in personal injury or equipment damage.

Access to the service area of the unit must be restricted to persons having knowledge and practical experience with the unit, in particular as far as safety and hygiene are concerned.

Cleaning and sanitizing schedules are governed by your state or local regulatory agencies and must be followed accordingly. Please refer to the cleaning section of this manual for the proper procedure to clean this unit.

This unit is designed to maintain product temperature under 41°F (5°C). Any product being added to this unit must be below 41°F (5°C). Failure to follow this instruction may result in health hazards and poor freezer performance.

DO NOT obstruct air intake and discharge openings: 3” (76 mm) minimum air space on all sides. Install the deflector provided to prevent recirculation of warm air. Failure to follow this instruction may cause poor freezer performance and damage to the machine.

For Indoor Use Only: This unit is designed to operate indoors, under normal ambient temperatures of 70°-75°F (21°-24°C). The unit has successfully performed in high ambient temperatures of up to 104°F (40°C) at reduced capacities.

DO NOT run the unit without product. Failure to follow this instruction can result in damage to the unit.

NOISE LEVEL: Airborne noise emission does not exceed 78 dB(A) when measured at a distance of 1.0 meter from the surface of the unit and at a height of 1.6 meters from the floor.

Notes:

C001 Exploded View

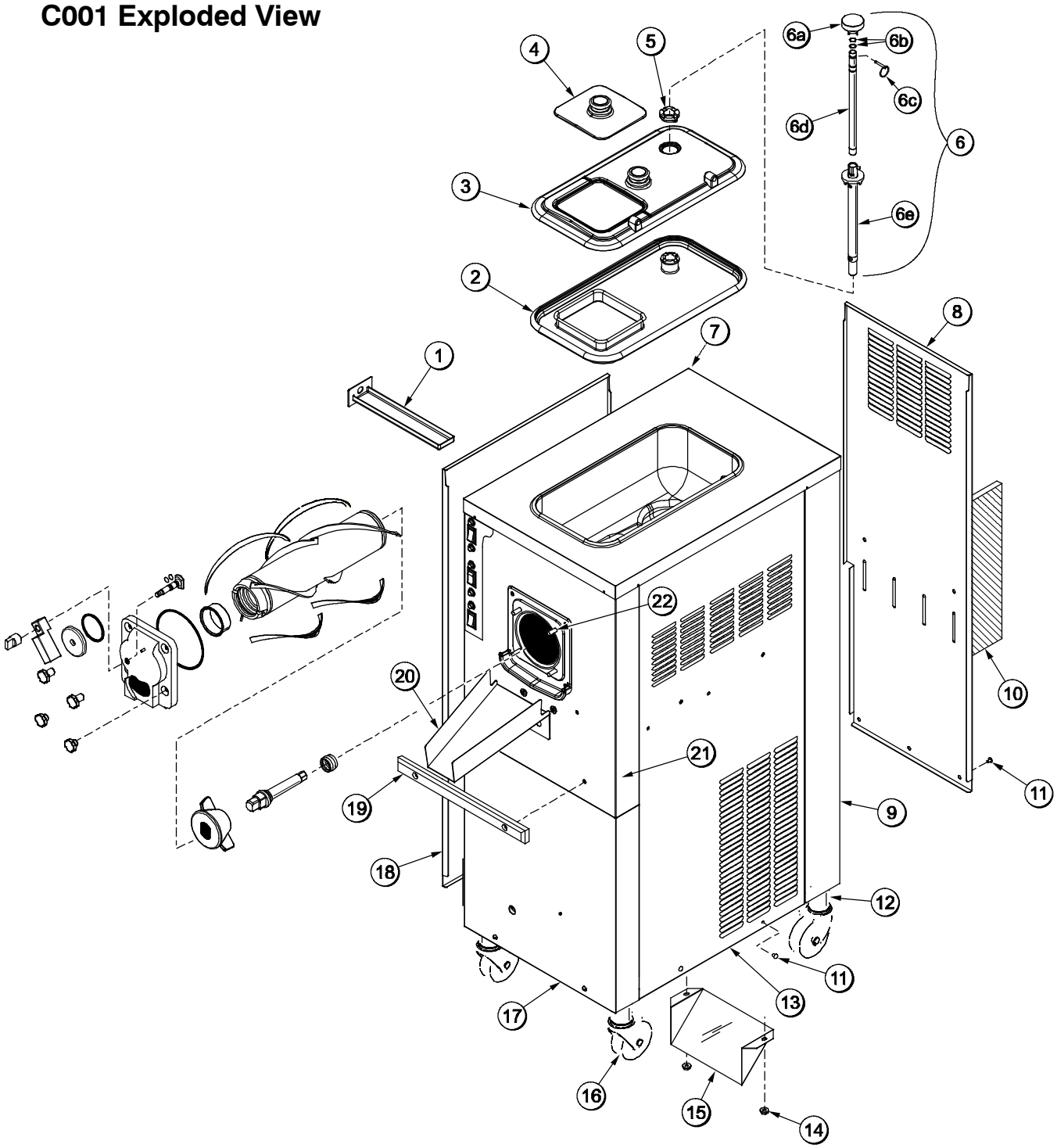

Figure 1

110304

C001 Exploded View Parts Identification

ITEM	DESCRIPTION	PART NO.
1	PAN-DRIP 11-5/8 LONG	027503
2	GASKET-HOPPER COVER	055356
3	COVER-HOPPER-LARGE	054732
4	COVER-HOPPER-SMALL	054733
5	BUSHING-COVER-HOPPER	054734
6	CONTROL A.-FLOW REG.	X59788
6a	KNOB-INNER-REG. TUBE	059785
6b	O-RING-12.42 MM ID X 1.4 MM	062451
6c	PIN-QUICK RELEASE 3/16 X 1 S	027813
6d	TUBE-INNER-REGULATOR	059787
6e	REGULATOR A.-FLOW OUTER	059784
7	TRIM-REAR CORNER L.	067971
8	PANEL-REAR	066551
9	TRIM-REAR CORNER R.	067972
10	FILTER-AIR-18.00LX13.50HX.70	052779-3

ITEM	DESCRIPTION	PART NO.
11	SCREW-1/4-20X3/8 SLTD RND	011694
12	ADAPTOR A.-CASTER	X18915
13	PANEL-SIDE-RIGHT * A/C	067968
14	NUT-10-32 WHIZ FLANGE LOCKNUT	020983
15	DEFLECTOR-BLOWER EXHAUST	047912
16	CASTER-4” SWV 5/8 STEM W/ BRAKE	034081
17	PANEL-LOWER FRONT	066544
18	PANEL-SIDE-LEFT *A/C	067967
19	BUMPER	054487
20	CHUTE-CUSTARD-LONG	054633
*21	PANEL A.-FRONT-COMPLETE	X66542-27
22	STUD-FREEZER	034035

*PANEL A.-UPPER FRONT (PANEL ONLY) = X66550

140801

C002 Exploded View

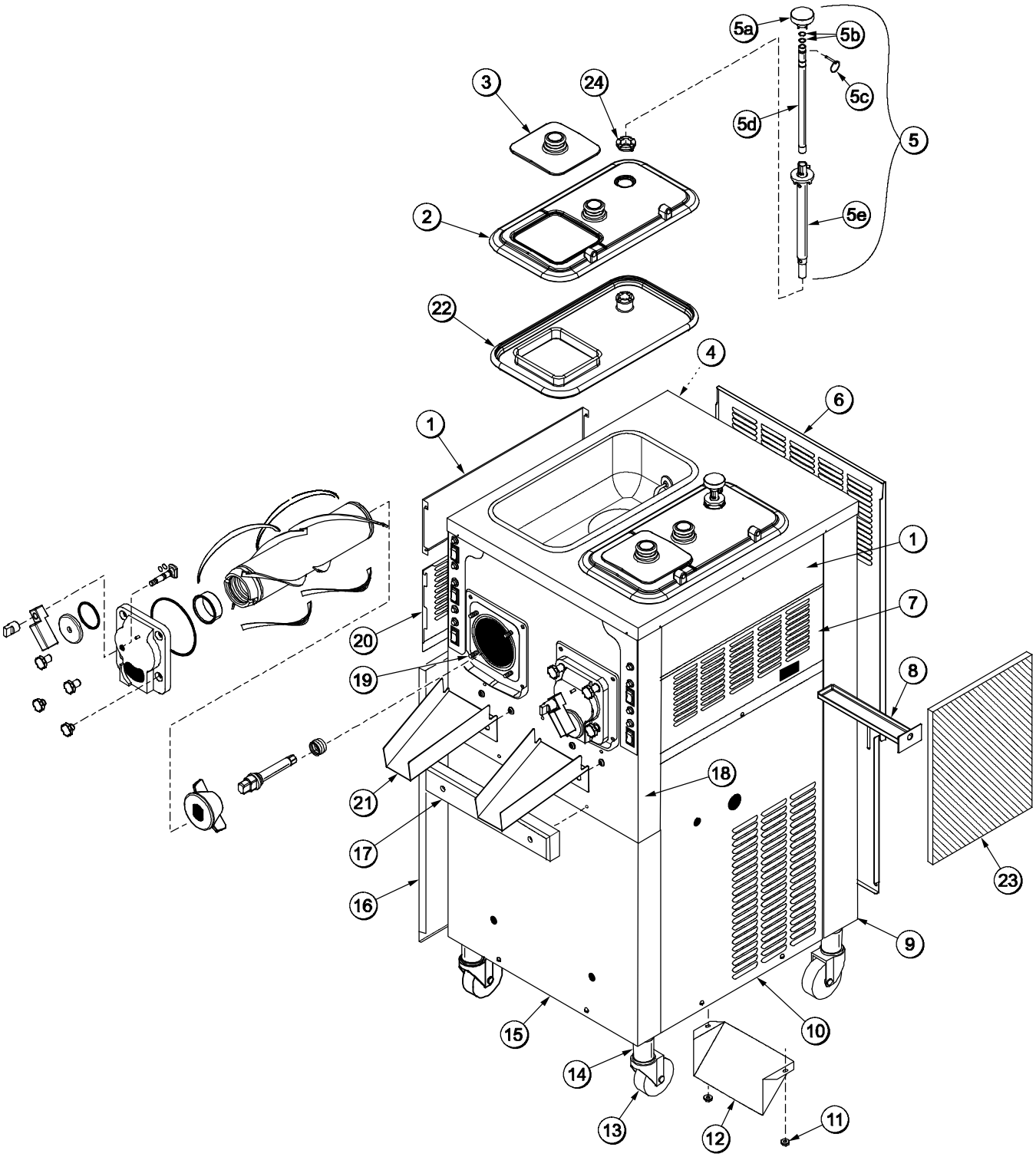

Figure 2

131021

C002 Exploded View Parts Identification

ITEM	DESCRIPTION	PART NO.
1	PANEL-SIDE TOP	029978
2	COVER-HOPPER-LARGE	054732
3	COVER-HOPPER-SMALL	054733
4	TRIM-REAR CORNER LEFT	054458
5	CONTROL A.-FLOW REG.	X59788
5a	KNOB-INNER REG. TUBE	059785
5b	O-RING-12.42 ID X 1.4 W	062451
5c	PIN-QUICK RELEASE 3/16 X 1	027813
5d	TUBE-INNER REGULATOR	059787
5e	REGULATOR A.-FLOW-OUTER	059784
6	PANEL-REAR	053782
7	PANEL-UPPER SIDE RIGHT	054449
8	PAN-DRIP 11-5/8 LONG	027503
9	TRIM-REAR CORNER RIGHT	054459
10	PANEL A.-SIDE RIGHT	X66497
11	NUT-10-32 WHIZ FLANGE LOCKNUT	020983

ITEM	DESCRIPTION	PART NO.
12	DEFLECTOR-BLOWER EXHAUST	047912
13	CASTER-4” SWV 5/8 STEM W/ BRAKE	034081
14	ADAPTOR·A.-CASTER	X18915
15	PANEL-FRONT-LOWER	066507
16	PANEL A.-SIDE LEFT	X66496
17	BUMPER-FRONT	054487
*18	PANEL A.-FRONT-COMPLETE	X66509-27
19	STUD-FREEZER	034035
20	PANEL-UPPER SIDE LEFT	054448
21	CHUTE-CUSTARD-LONG	054633
22	GASKET-HOPPER COVER	055356
23	FILTER-AIR 18 L X 13.5 H .70W	052779-3
24	BUSHING-COVER-HOPPER	054734

*PANEL A.-UPPER FRONT (PANEL ONLY) = X66493

080610

Dasher (Beater) and Door Assembly

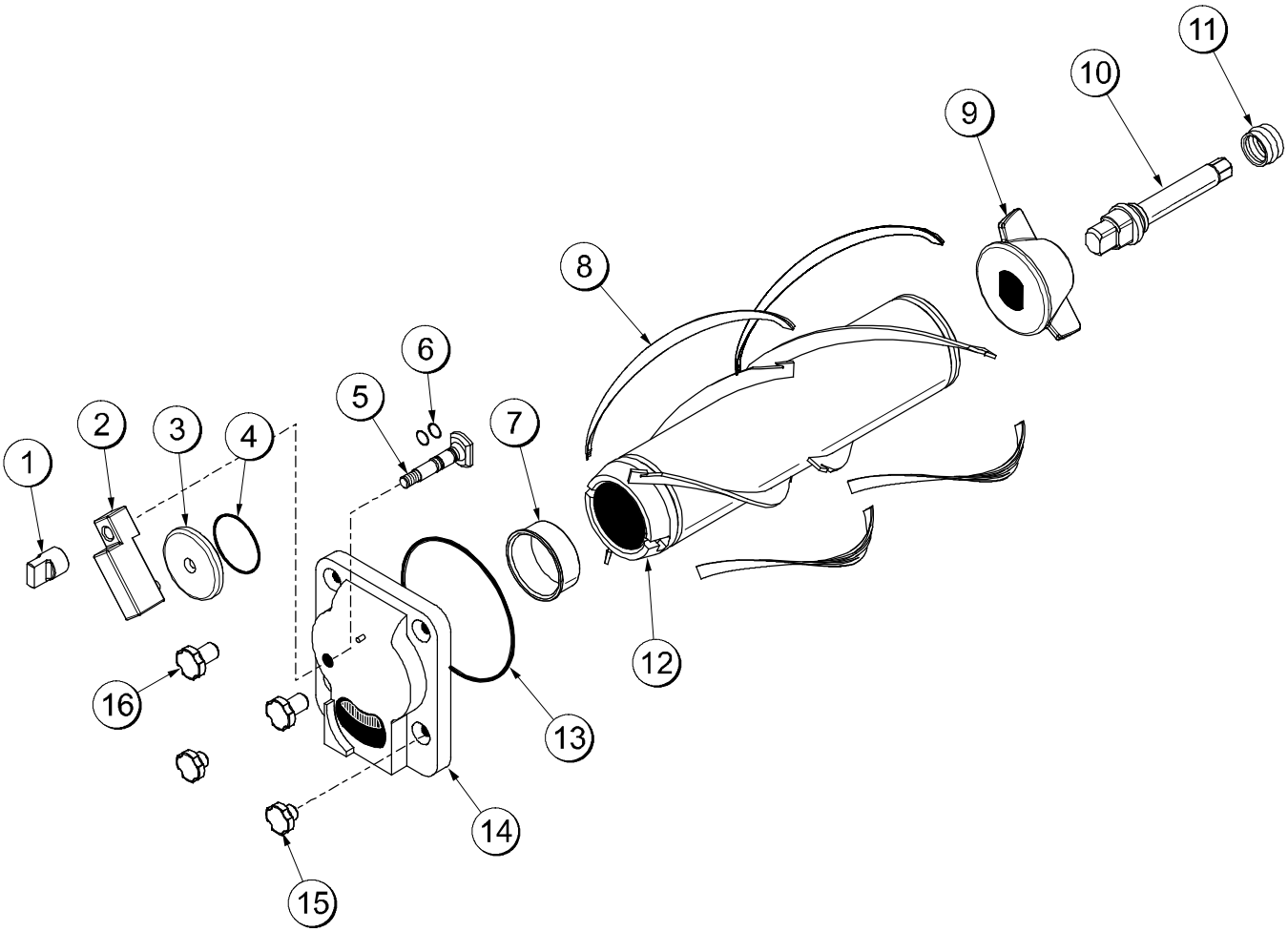

Figure 3

ITEM	DESCRIPTION	PART NO.
1	CAP-DOOR-STEM	055179
2	ARM-HANDLE	055183
3	PLATE-DRAW	054445
4	O-RING-2-3/4 OD X .139W-70	055182
5	SCREW-DOOR-STEM	055180
6	O-RING-.563 OD X .070W-#013	043758
7	BEARING-FRONT	013116
8	BLADE-SCRAPER	054485

ITEM	DESCRIPTION	PART NO.
9	BAFFLE-SHORT	054481
10	SHAFT-DASHER DRIVE	054484
11	SEAL-DRIVE SHAFT	032560
12	DASHER A.-COMPLETE	X54483
13	O-RING-6 IN OD X 5 3/4 ID X 1/8	033493
14	DOOR-C002	X55178-SER
15	NUT-STUD	034034
16	NUT-STUD	021508

Accessories

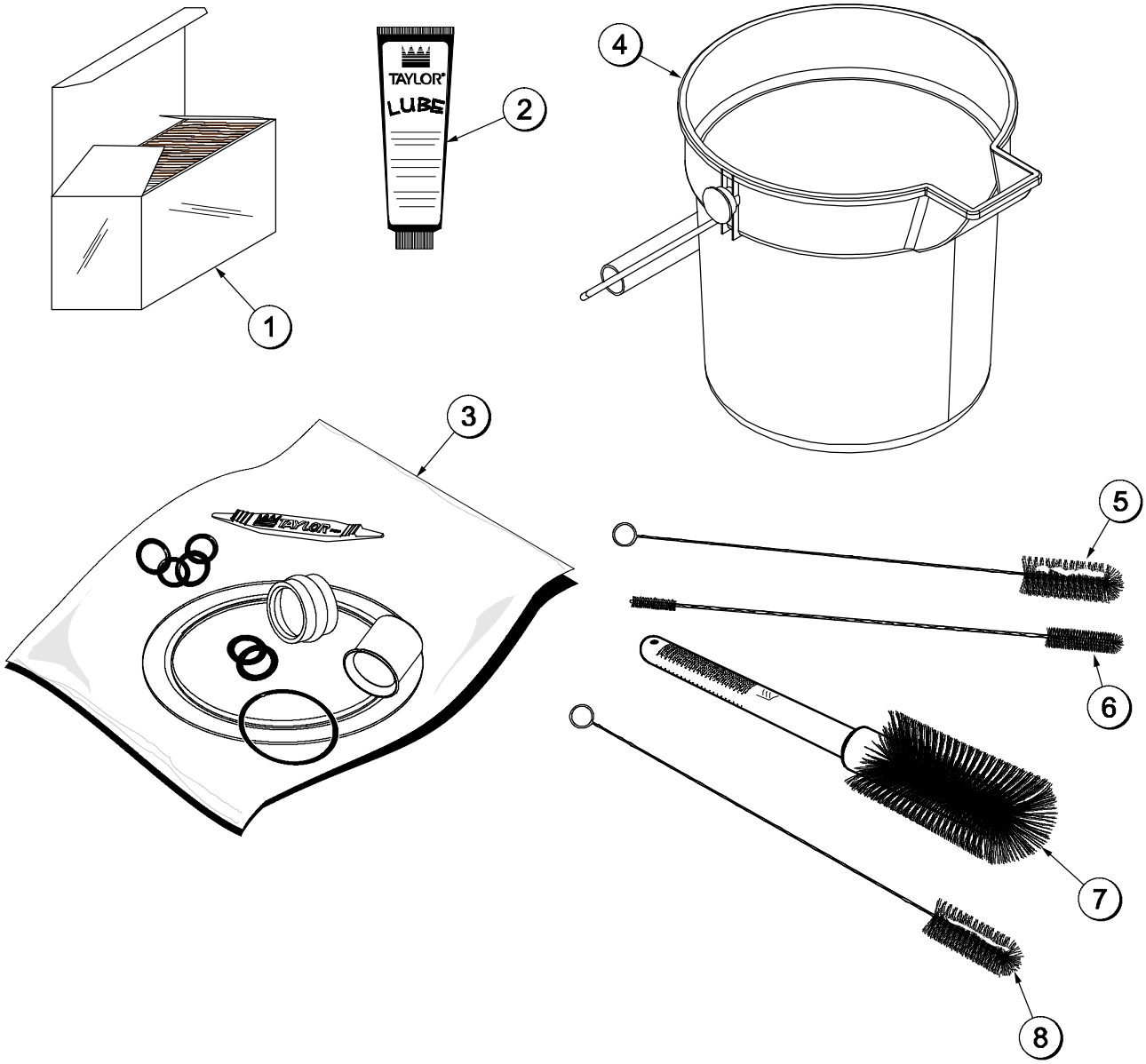

Figure 4

ITEM	DESCRIPTION	PART NO.
1	SANITIZER- STERA SHEEN	055492
2	LUBRICANT- TAYLOR 4 OZ.	047518
3	KIT A.- TUNE UP	X54630- 1
4	PAIL- 10 QT.	013163

ITEM	DESCRIPTION	PART NO.
5	BRUSH- REAR BEARING	013071
6	BRUSH- DOUBLE ENDED	013072
7	BRUSH- MIX PUMP BODY	023316
8	BRUSH- DRAW VALVE	013073

140801

C001

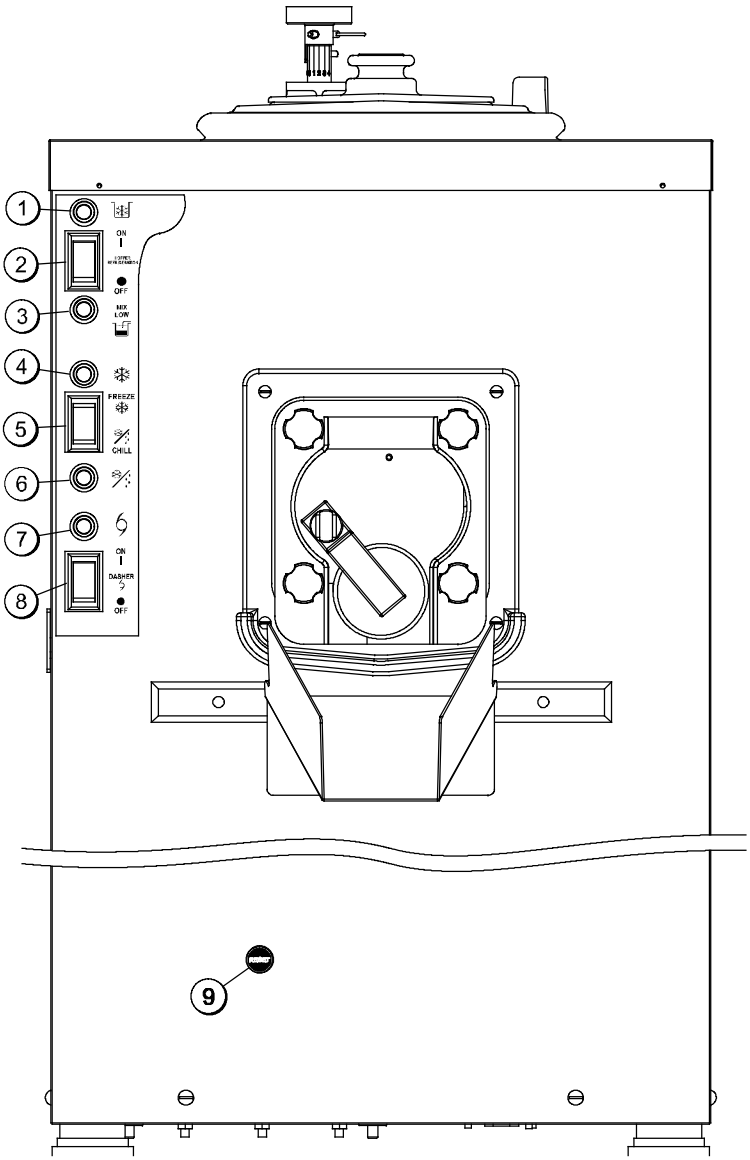

Figure 5

ITEM	DESCRIPTION
1	LIGHT- HOPPER REFRIG. ON/OFF
2	SWITCH- HOPPER REFRIG. ON/OFF
3	LIGHT- MIX LOW
4	LIGHT- FREEZE MODE
5	SWITCH- FREEZE/CHILL MODE

ITEM	DESCRIPTION
6	LIGHT- CHILL MODE
7	LIGHT- DASHER ON/OFF
8	SWITCH- DASHER ON/OFF
9	BUTTON- RESET

110304

C002

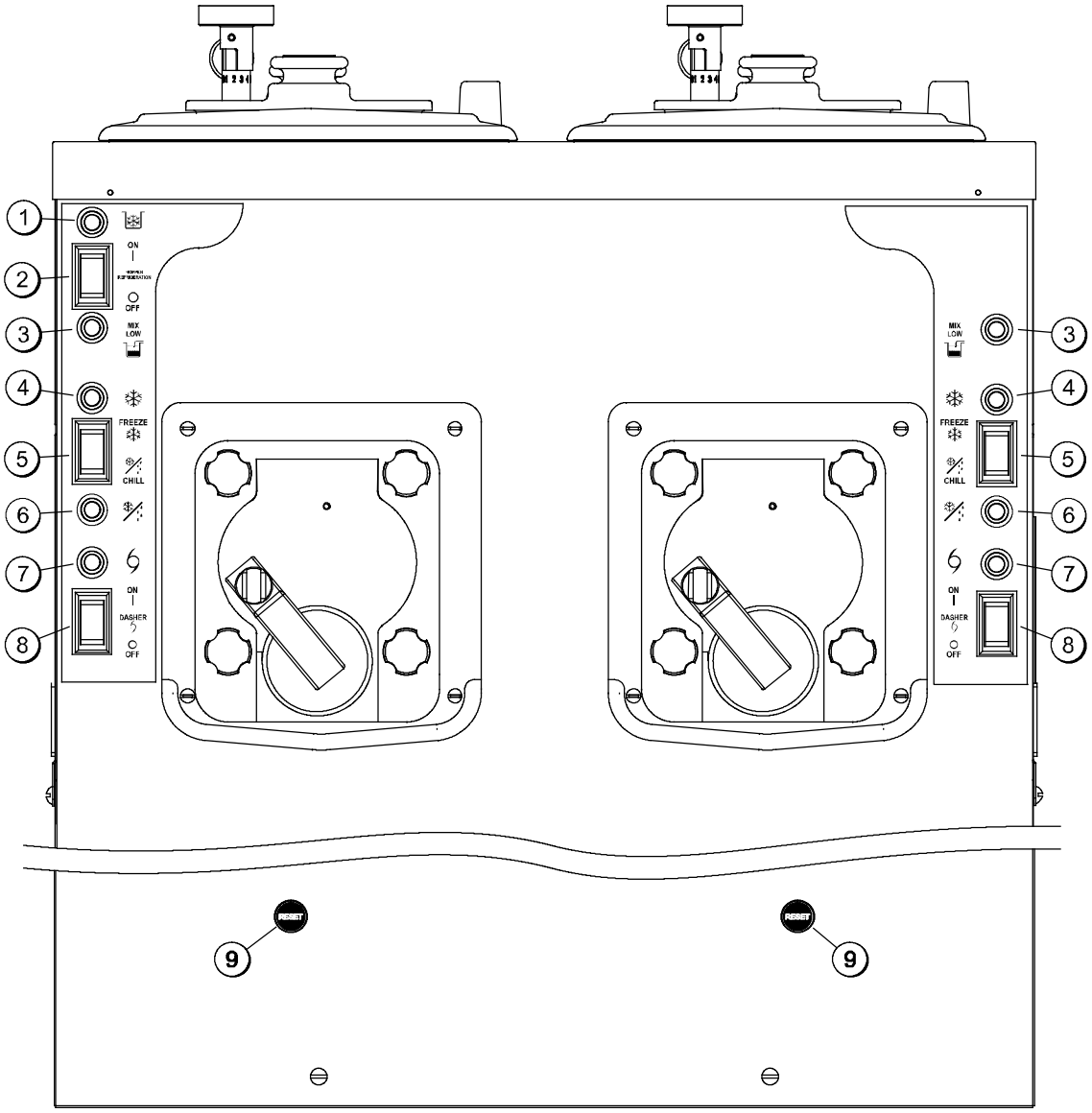

Figure 6

ITEM	DESCRIPTION
1	LIGHT- HOPPER REFRIG. ON/OFF
2	SWITCH- HOPPER REFRIG. ON/OFF
3	LIGHT- MIX LOW
4	LIGHT- FREEZE MODE
5	SWITCH- FREEZE/CHILL MODE

ITEM	DESCRIPTION
6	LIGHT- CHILL MODE
7	LIGHT- DASHER ON/OFF
8	SWITCH- DASHER ON/OFF
9	BUTTON- RESET

080930

Symbol Definitions

To better communicate in the International arena, the words on many of our operator switches and buttons have symbols to indicate their functions. Your Taylor equipment is designed with these International symbols.

The following chart identifies the symbol definitions used on the operator switches.

= HOPPER REFRIGERATION

= ON

= OFF

= MIX LOW

= FREEZE MODE

= CHILL MODE

= DASHER

Section 6 Operating Procedures

The Model C001 is a single flavor custard freezer with a 20 quart (18.9 liter) hopper. The Model C002 is a two flavor custard freezer with two 20 quart (18.9 liter) hoppers. Mix flows by gravity through an adjustable flow regulator into the freezing cylinder(s). These units have been designed to produce rich tasting custard product that can be drawn off and served from a dipping cabinet. The overrun is low; typically 15- 20%, and varies depending on the mix formulation and the finished product temperature 17 to 19°.F (- 8.3 to - 7.2°C).

The Model C002 has been selected to illustrate the pictured step- by- step operating procedures for both models contained in this manual. These models, for practical purposes of operation, are the same.

We begin our instructions at the point where we find the parts disassembled and laid out to air dry from the previous brush cleaning.

The following procedures will show you how to assemble the parts into the freezer, sanitize them, and prime the freezer with fresh mix.

If you are disassembling the freezer for the first time or need information to get to this starting point in our instructions, turn to page 24 , “Disassembly” and start there.

Assembly

MAKE SURE THE DASHER POWER SWITCH IS IN THE “OFF” POSITION. Failure to follow this instruction may cause severe personal injury to fingers or hands from hazardous moving parts.

Step 1
Install the drive shaft. Lubricate the groove and shaft portion that comes in contact with the bearing on the dasher drive shaft. Slide the seal over the shaft and groove until it snaps into place. **DO NOT** lubricate the hex end of the drive shaft. Fill the inside portion of the seal with 1/4” (6 mm) more lubricant and lubricate the flat side of the seal that fits onto the rear shell bearing.

Note: When lubricating parts, always use an approved food grade lubricant (example: Taylor Lube).

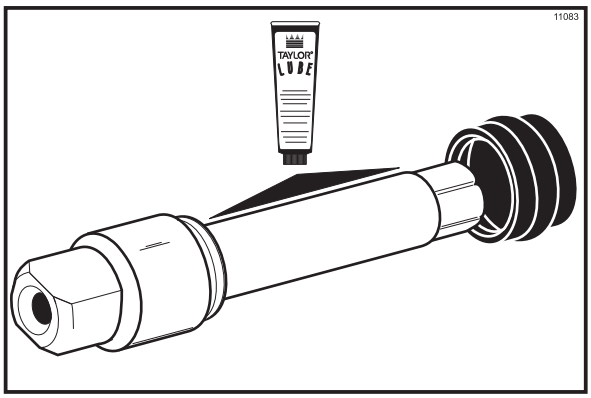

Figure 7

Insert the drive shaft into the freezing cylinder, hex end first, and into the rear shell bearing until the seal fits securely over the rear shell bearing. Engage the hex end firmly into the drive coupling. Be sure the drive shaft fits into the drive coupling without binding.

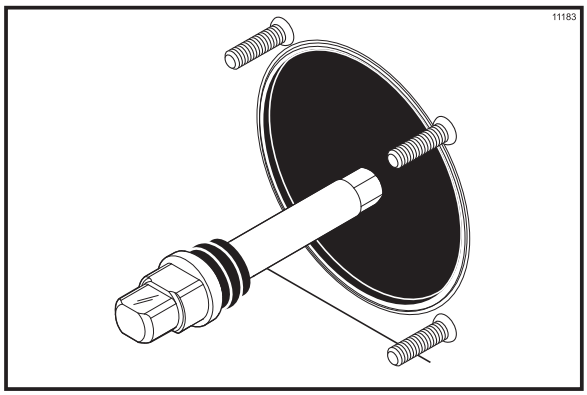

Figure 8

Step 2
Install the short baffle into the freezing cylinder, narrow end first. Slide it over the end of the drive shaft.

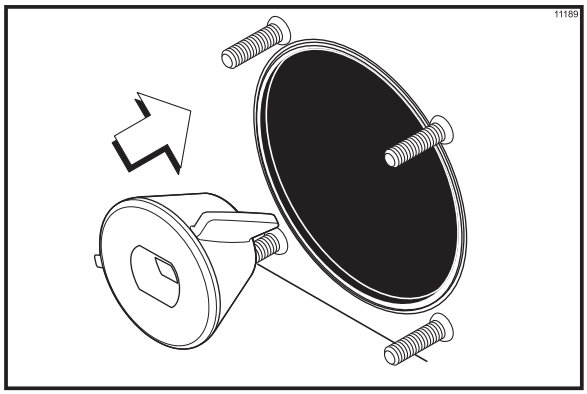

Figure 9

Step 3
Assemble the dasher. Take one of the scraper blades and slip it under the hook at the front of the dasher. Wrap the blade around the dasher, following the helix and pushing the blade down onto the helix as you wrap. At the back end of the dasher, slip the blade under the hook. **Repeat** this step for the other scraper blades.

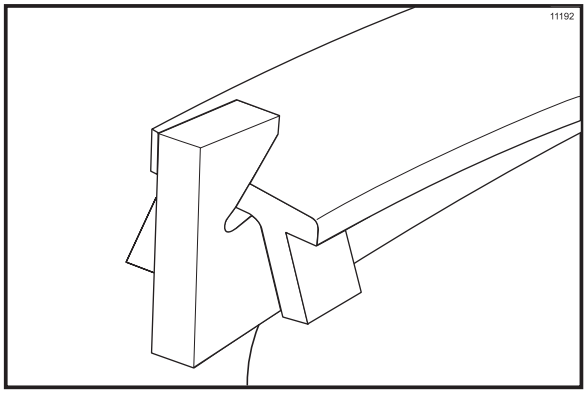

Figure 10

Step 4
Install the dasher. Slide the dasher into the freezing cylinder and over the end of the drive shaft. The dasher should fit snugly, but not so tightly that the dasher cannot be turned slightly to engage the drive shaft. If the dasher slides in too easily with little or no resistance, there will not be enough force against the dasher to hold the blades in place. If this is the case, contact your authorized Taylor service technician.

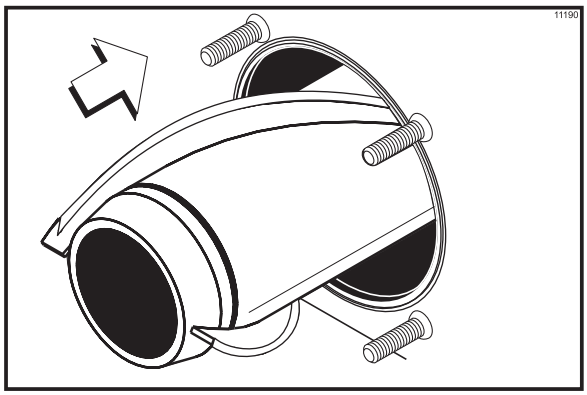

Figure 11

Note: A dasher installation/removal tool is available to assist in the installation and removal of the dasher. To install the dasher, insert the short bars of the tool into the slots in the end of the dasher. Using the long bar of the tool, push the dasher until it is properly installed in the freezing cylinder.

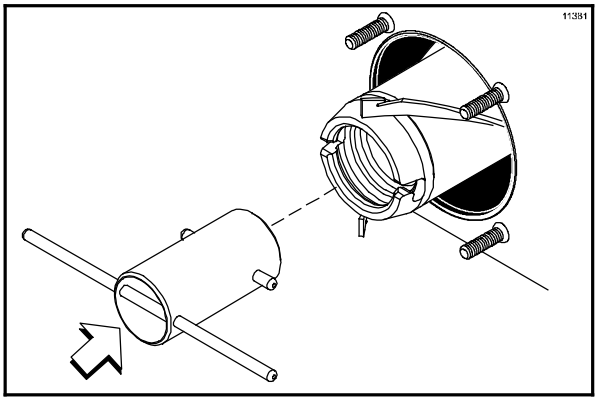

Figure 12

Install the front bearing into the front of the dasher assembly.

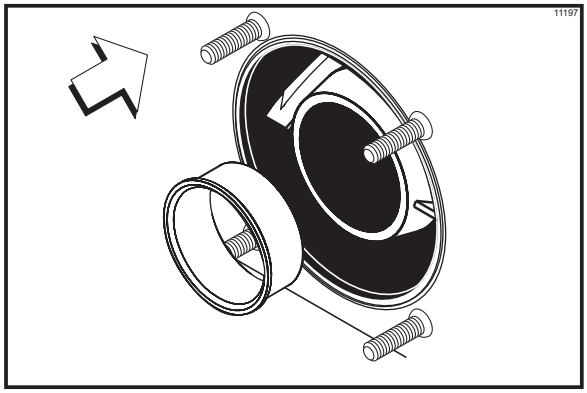

Figure 13

090106

Step 5

Assemble the freezer door. Install the draw plate o- ring onto the plate and lubricate.

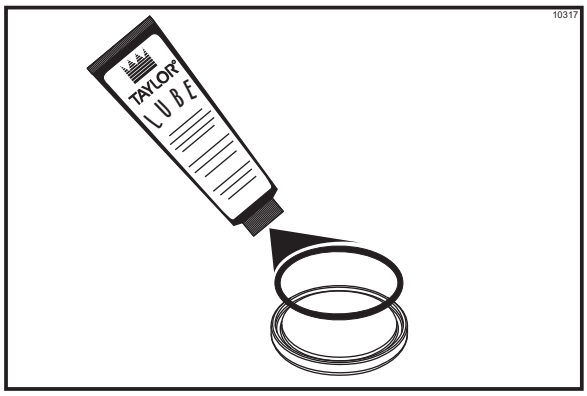

Figure 14

Install the two stem screw o- rings onto the stem screw and lubricate.

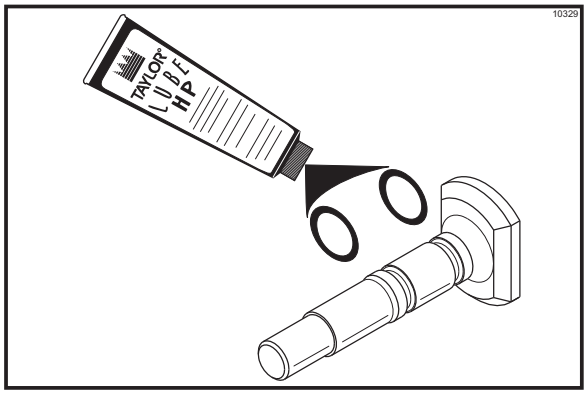

Figure 15

Place the stem screw through the back of the door. With the door in a horizontal position, install the draw plate. Align the handle with the stem screw and the draw plate. Hand- tighten the stem cap onto the stem screw.

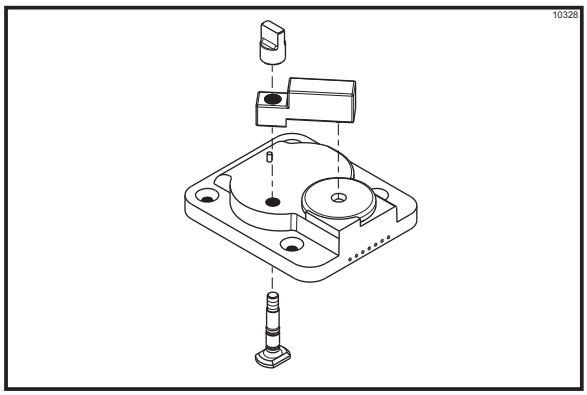

Figure 16

Turn the door over and install the large door o- ring. Place a small amount of lubricant on the o- ring, just enough to hold the o- ring in place.

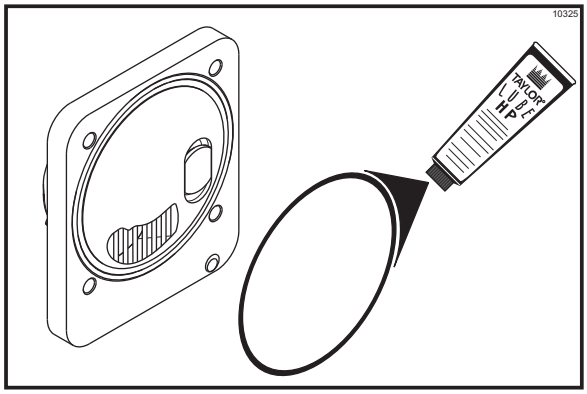

Figure 17

Step 6

Install the freezer door. Seat the door flush with the freezing cylinders. With the door seated on the freezer studs, install the stud nuts (handscrews). The short stud nuts go on the bottom and the long stud nuts go on top. Tighten equally in a crisscross pattern to insure the door is snug.

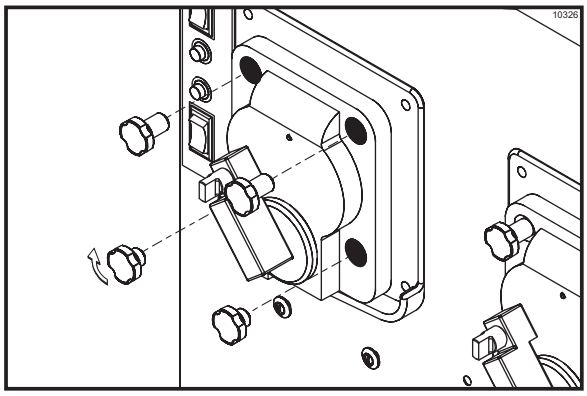

Figure 18

Step 7
Assemble the flow regulator assembly. Install the two o- rings onto the inner flow regulator. Lubricate the o- rings. Install the knob onto the end of the inner flow regulator and secure it with the quick release pin. Insert the inner flow regulator into the outer flow regulator.

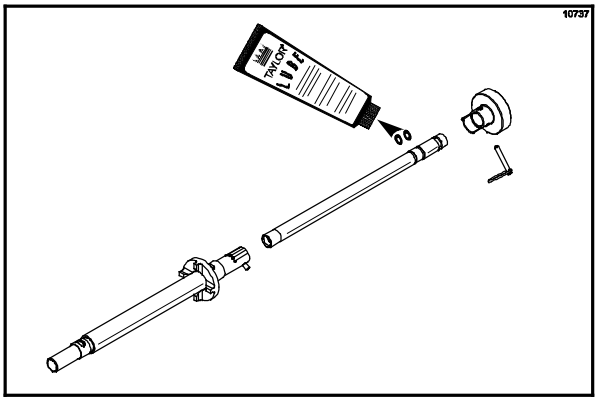

Figure 19

Step 8
Place the assembled flow regulator into the hopper for sanitizing.

Step 9
Install the rear bearing drip pan.

Step 10
Put the sanitized hopper gasket on the hopper cover.

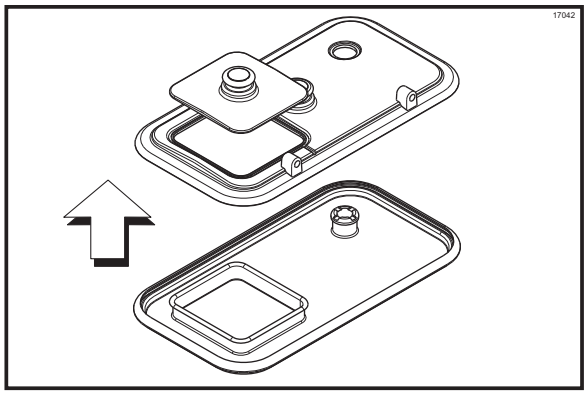

Figure 20

Repeat these steps for the other side of the freezer.

Sanitizing

Step 1
Prepare an approved 100 PPM sanitizing solution (examples: 2- 1/2 gal. [9.5 liters] of Kay- 5® or 2 gal. [7.6 liters] of Stera- Sheen®). USE WARM WATER AND FOLLOW THE MANUFACTURER'S SPECIFICATIONS.

Step 2
Pour the sanitizing solution into the hopper.

Step 3
While the solution is flowing into the freezing cylinder, brush clean the mix hopper. When cleaning the hopper, take particular care in brushing the mix inlet hole and the flow regulator.

Step 4
Place an empty pail under the draw plate. The pail can be hung from the hand screws on the freezer door.

Step 5
Place the dasher motor power switch in the ON position for 5 minutes.

Step 6
In order to avoid having sanitizer splashing out when the draw plate is opened, place the dasher motor switch in the OFF position. Open the draw plate and place the dasher motor switch in the ON position. Drain the sanitizer into an empty pail. Place the dasher motor switch in the OFF position and close the draw plate.

KEEP FINGERS OUT OF FILL AND DISCHARGE OPENINGS! Failure to do so may result in severe personal injury, contaminated product, or component damage.

Repeat these steps for the other side of the freezer.

Priming for Continuous Run

Step 1
With sanitized hands, remove the flow regulator assembly from the mix hopper and set it on a clean, dry surface. Place an empty pail under the draw plate.

Step 2
Pour 1 - 2 cups (1/2 liter) of mix into the hopper to remove the remaining sanitizing solution from the freezing cylinder.

Step 3
Open the draw plate on the freezer door and place the dasher motor power switch in the ON position.

Repeat steps 1 - 2 for the other side of the freezer.

KEEP FINGERS OUT OF FILL AND DISCHARGE OPENINGS! Failure to do so may result in severe personal injury, contaminated product, or component damage.

Step 4
Install the large hopper cover on the hopper.

Step 5
With sanitized hands, install the flow regulator through the hopper cover. Align the flow regulator with the slots on the hopper cover. The flow regulator can be positioned to allow the numbers to be read from the front, back or either side.

Step 6
Pour mix into the hopper and fill it to 1/2" (13 mm) below the air inlet on the flow regulator.

Step 7
Place the FREEZE/CHILL switch in the FREEZE position and the hopper refrigeration switch in the ON position.

Step 8
Allow the unit to run for 2 minutes. Set the flow regulator between S - 1.

Step 9
Install the small hopper lid.

Repeat steps 4 - 9 for the other side of the freezer.

Note: The flow regulator opening is adjustable. The smaller the number, the less product will flow into the freezing cylinder. The larger the number, the more product will flow into the freezing cylinder. The numbers are only guides. The flow regulator may be adjusted to any point in between the numbers.

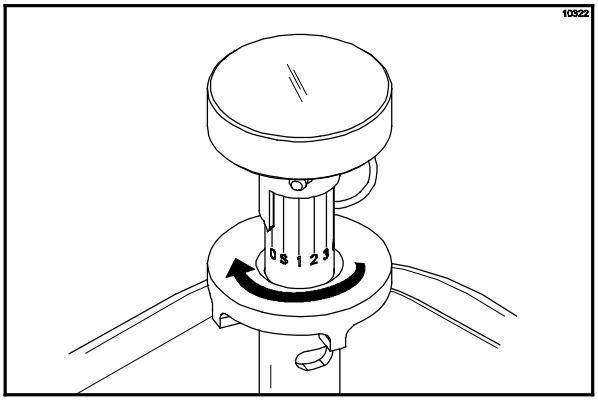

Figure 21

Step 10
Install the chute on the two holding collars under the door and position it over the holding cabinet opening.

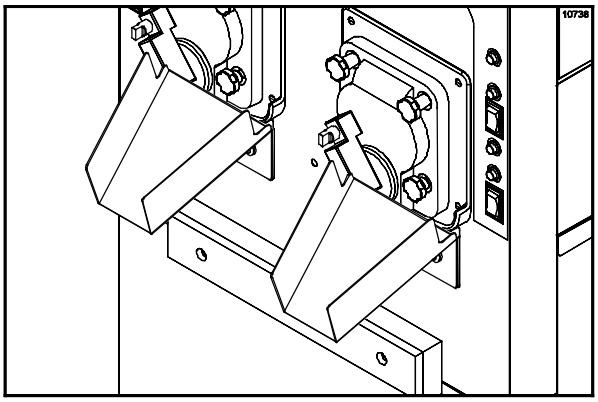

Figure 22

Step 11
Leave the draw plate closed until product can be seen coming out around the edges of the draw plate (approximately 3 to 4 minutes) and then open the draw plate all the way.

140801

Step 12
With the draw plate open and a full ribbon of product dispensing at the proper frozen consistency, the flow regulator will need to be opened further to prevent the freezing cylinder from starving.

IMPORTANT: If the freezing cylinder becomes starved and begins to make noise, increase the number on the flow regulator. Wait one or two minutes. If the noise continues, place the FREEZE/CHILL switch in the OFF position until product begins flowing from the door. Place the FREEZE/CHILL switch back in the FREEZE mode position. **Repeat** these steps as necessary to adjust for a specific mix. **DO NOT TURN DASHER OFF!**

If the product becomes too soft, decrease the flow regulator opening.

Repeat steps 10 - 12 for the other side of the freezer.

Stopping a Continuous Run for a Short Period of Time

Step 1
Leave the flow regulator in the DOWN position, but adjust the setting to 0. Wait 30 seconds.

Step 2
Place the FREEZE/CHILL switch in the CHILL mode position. Wait two minutes.

Step 3
Place the dasher power switch in the OFF position.

Step 4
Close the draw plate.

WARNING: The dasher motor power switch must be placed in the OFF position when the draw plate is closed. Failure to comply can result in serious equipment damage and possible injury to the operator.

To Restart the Continuous Run:

Step 1
Place the dasher power switch in the ON position.

Step 2
Place the FREEZE/CHILL switch in the FREEZE mode position. Wait one minute.

Step 3
Open the flow regulator back to the previous run setting.

Step 4
Once product starts coming out around the edges of the draw plate, open the draw plate.

Closing Procedure

To disassemble your unit, the following items will be needed:

- Two cleaning pails
- Necessary brushes (provided with freezer)
- Cleaner
- Single service towels

Draining Product From The Freezing Cylinder

Step 1
Place the FREEZE/CHILL and the hopper refrigeration switches in the OFF position.

Step 2
Remove the flow regulator assembly, hopper covers, gaskets, discharge chute and rear bearing drip pan. Take these parts to the sink for cleaning in an approved cleaning solution (examples: Kay-5® or Stera-Sheen®).

Step 3
If local health codes permit the use of rerun, place a sanitized, NSF approved stainless steel rerun container beneath the draw plate. Place the dasher power switch in the ON position. Drain the remaining product into the rerun container. When the flow of product stops, place the dasher power switch in the OFF position. Place the sanitized lid on the rerun container and place it in the walk-in cooler.

Note: If local health codes DO NOT permit the use of rerun, the product must be discarded. Follow the instructions in the previous step, except drain the product into a pail and properly discard the mix.

Repeat steps 1 through 3 for the other side of the freezer.

ALWAYS FOLLOW LOCAL HEALTH CODES.

Rinsing

Step 1
With a pail beneath the draw plate, pour two gallons (7.6 liters) of **cool** clean water into the mix hopper. With the brushes provided, scrub the mix hopper.

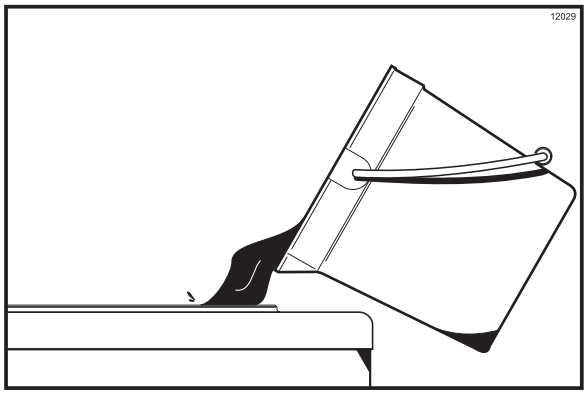

Figure 23

Step 2
Place the dasher motor power switch in the ON position. Agitate for five minutes. Drain all the rinse water from the freezing cylinder.

Repeat steps 1 through 2 until the water is clear.

Step 3
Once all the rinse water has drained, place the dasher motor power switch in the OFF position.

Repeat steps 1 through 3 for the other side of the freezer.

140801

Cleaning

Step 1
Prepare an approved 100 PPM cleaning solution (examples: 2- 1/2 gal. [9.5 liters] of Kay- 5® or 2 gal. [7.6 liters] of Stera- Sheen®). USE WARM WATER AND FOLLOW THE MANUFACTURER'S SPECIFICATIONS.

Step 2
With the draw plate closed, pour the cleaning solution into the mix hopper.

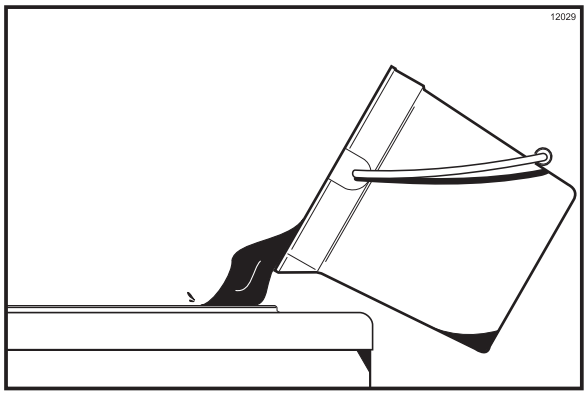

Figure 24

Step 3
While the solution is flowing into the freezing cylinder, brush clean the mix hopper.

Step 4
Place an empty pail beneath the draw plate.

Step 5
Place the dasher motor switch in the ON position.

Step 6
Allow all of the solution to drain.

Repeat steps 1 through 6 for the other side of the freezer.

Disassembly

MAKE SURE THE DASHER POWER SWITCH IS IN THE "OFF" POSITION. Failure to follow this instruction may result in severe personal injury to fingers or hands from hazardous moving parts.

Step 1
Remove the flow regulators from the mix hoppers. Remove the handscrews, freezer doors, dashers, scraper blades, chutes, and drive shafts from the freezing cylinders. Take these parts to the sink for cleaning.

Note: A dasher installation/removal tool is available to assist in the installation and removal of the dasher. To remove the dasher, insert the two short bars of the tool into the slots in the end of the dasher. Holding the long bar of the tool, turn the tool clockwise to lock the tool in the dasher, and then pull the dasher out.

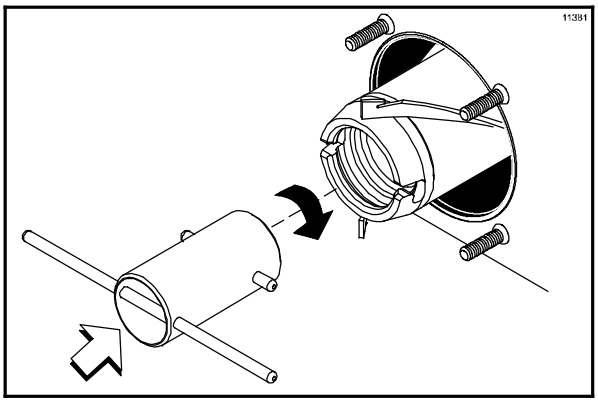

Figure 25

Brush Cleaning

Step 1
Prepare a sink with an approved cleaning solution (examples: Kay- 5® or Stera- Sheen®). USE WARM WATER AND FOLLOW THE MANUFACTURER'S SPECIFICATIONS. If another approved cleaner is used, dilute it according to the label instructions. (**IMPORTANT**: Follow the label directions. Too STRONG of a solution can cause parts damage, while too MILD of a solution will not provide adequate cleaning.) Make sure all brushes provided with the freezer are available for brush cleaning.

Step 2
Remove the seals from the drive shafts.

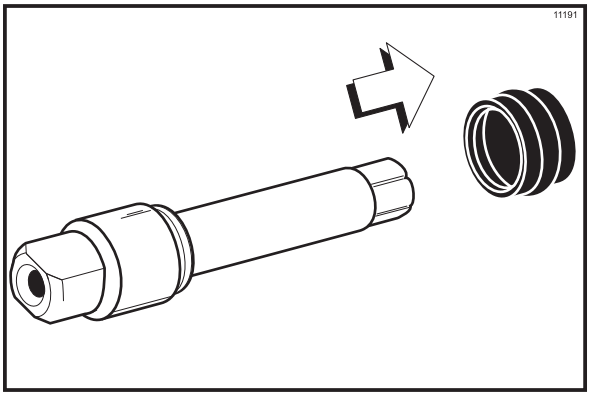

Figure 26

Step 3
From the freezer door remove:

- front bearings
- handle arms
- plates
- stem caps
- stem screws

Step 4
Remove all o- rings.

Note: To remove o- rings, use a single service towel to grasp the o- ring. Apply pressure in an upward direction until the o- ring pops out of its groove. With the other hand, push the top of the o- ring forward and it will roll out of the groove and can be easily removed. If there is more than one o- ring to be removed, always remove the rear o- ring first. This will allow the o- ring to slide over the forward rings without falling into the open grooves.

Step 5
Remove the o- rings from the inner flow regulators.

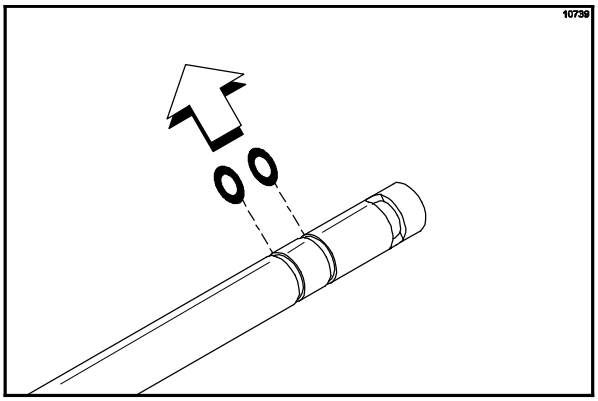

Figure 27

Step 6
Remove the hopper cover gasket from the hopper cover.

Step 7
Return to the freezer with a small amount of cleaning solution. Brush clean the mix inlet holes in the mix hoppers.

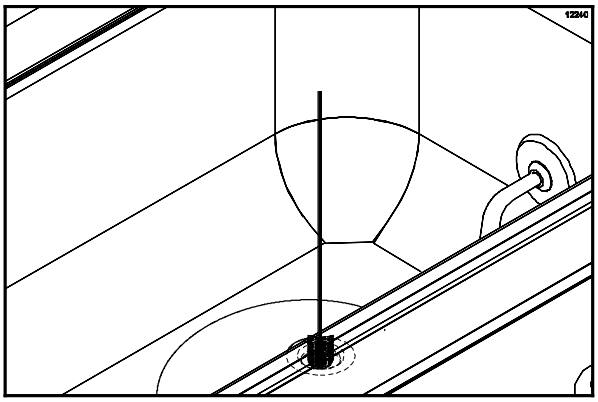

Figure 28

Step 8
Brush clean the rear shell bearings at the back of the freezing cylinders with the black bristle brush.

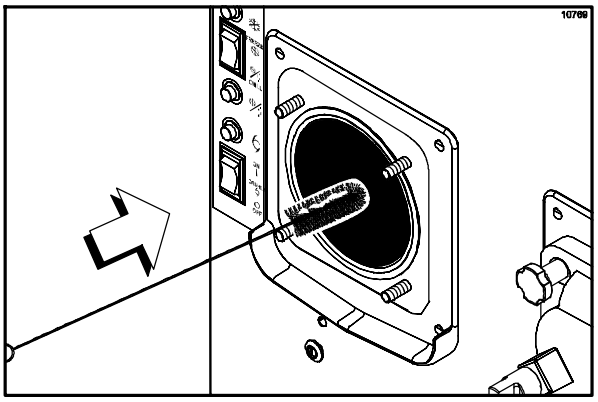

Figure 29

Step 9
Thoroughly brush clean all disassembled parts in the cleaning solution, making sure all lubricant and mix film is removed. Place all the cleaned parts on a clean, dry surface to air dry overnight.

Step 10
Wipe clean all exterior surfaces of the freezer.

Section 7 Important: Operator Checklist

During Cleaning and Sanitizing

ALWAYS FOLLOW LOCAL HEALTH CODES.

Cleaning and sanitizing schedules are governed by federal, state, or local regulatory agencies, and must be followed accordingly. If the unit has a "Standby mode", it must not be used in lieu of proper cleaning and sanitizing procedures and frequencies set forth by the ruling health authority. The following check points should be stressed during the cleaning and sanitizing operations.

CLEANING AND SANITIZING MUST BE PERFORMED DAILY.

Troubleshooting Bacterial Count

☐ 1. Thoroughly clean and sanitize the machine regularly, including complete disassembly and brush cleaning.

☐ 2. Use all brushes supplied for thorough cleaning. The brushes are specially designed to reach all mix passageways.

☐ 3. Use the white bristle brush to clean the mix inlet hole which extends from the mix hopper down to the rear of the freezing cylinder.

☐ 4. Use the black bristle brush to thoroughly clean the rear shell bearing located at the rear of the freezing cylinder. Be sure there is a generous amount of cleaning solution on the brush.

☐ 5. IF LOCAL HEALTH CODES PERMIT THE USE OF RERUN, make sure the mix rerun is stored in a sanitized, covered stainless steel container and used the following day. **DO NOT prime the machine with rerun.** When using rerun, skim off the foam and discard. Mix the rerun with fresh mix in a ratio of 50/50 during the days operation.

☐ 6. On a designated day of the week, run the mix as low as feasible and discard it after closing. This will break the rerun cycle and reduce the possibility of high bacteria and coliform counts.

☐ 7. Properly prepare the cleaning and sanitizing solutions. Read and follow the label directions carefully. Too strong of a solution may damage the parts and too weak of a solution will not do an adequate job of cleaning or sanitizing.

☐ 8. The temperature of the mix in the mix hopper and walk-in cooler should be below 40°F (4.4°C).

Regular Maintenance Checks

☐ 1. Replace scraper blades that are nicked or damaged. Before installing the dasher assembly, be certain that the scraper blades are properly attached to the dasher shaft.

☐ 2. Check the rear shell bearing for signs of wear (excessive mix leakage in rear drip pan) and be certain it is properly cleaned.

☐ 3. Using a long brush and a cloth towel, keep the rear shell bearing and the female hex drive socket clean and free of lubricant and mix deposits.

☐ 4. Dispose of o-rings and seals if they are worn, torn, or fit too loosely, and replace with new ones.

☐ 5. Follow all lubricating procedures as outlined in “Assembly”.

☐ 6. If your machine is air cooled, check the condenser for an accumulation of dirt and lint. Dirty condensers will reduce the efficiency and capacity of the machine. Condensers should be cleaned **monthly** with a soft brush. **Never** use screwdrivers or other metal probes to clean between the fins.
Note: For machines equipped with an air filter, it will be necessary to vacuum the filters on a monthly schedule.

Caution: Always disconnect electrical power prior to cleaning the condenser. Failure to follow this instruction may result in electrocution.

☐ 7. If your machine is water cooled, check the water lines for kinks or leaks. Kinks can occur when the machine is moved back and forth for cleaning or maintenance purposes. Deteriorated or cracked water lines should be replaced only by an authorized Taylor distributor.

Winter Storage

If the place of business is to be closed during the winter months, it is important to protect the freezer by following certain precautions, particularly if the building is subject to freezing conditions.

Disconnect the freezer from the main power source to prevent possible electrical damage.

On water cooled freezers, disconnect the water supply. Relieve pressure on the spring in the water valve. Use air pressure on the outlet side to blow out any water remaining in the condenser. **This is extremely important.** Failure to follow this procedure may cause severe and costly damage to the refrigeration system.

Your local Taylor Distributor can perform this winter storage service for you.

Wrap detachable parts of the freezer such as dasher, blades, dasher shaft, and freezer door, and place them in a protected dry place. Rubber trim parts and gaskets can be protected by wrapping them with moisture- proof paper. All parts should be thoroughly cleaned of dried mix or lubrication which attract mice and other vermin.

It is recommended that an authorized service technician perform winter storage draining, to insure all water has been removed. This will guard against freezing and rupturing of the components.

080130

Section 8 Troubleshooting Guide

PROBLEM	PROBABLE CAUSE	REMEDY	PAGE REF.
1. Compressor will not run.	a. Dasher motor switch and/or FREEZE/CHILL switch are in the wrong position.	a. Place the dasher motor switch and/or the FREEZE/CHILL switch in the “FREEZE” position.	15
	b. The contactor is faulty.	b. Call service technician.	- - -
	c. Compressor has burned out.	c. Call service technician.	- - -
	d. The fuse or circuit breaker has blown.	d. Replace fuse/turn on breaker.	2
	e. Tripped overload (compressor).	e. Place the power switch in “OFF”. Allow compressor to cool and the overload to close before returning the power switch to “ON”.	- - -
	f. Freezer door is off.	f. Install the freezer door.	19
2. Head pressure is too high.	a. Condenser is dirty.	a. Clean the condenser.	27
	b. Refrigerant overcharge.	b. Call service technician.	- - -
	c. Fan is faulty.	c. Call service technician.	- - -
3. Head pressure is too low.	a. Shortage of refrigerant.	a. Call service technician.	- - -
4. Liquid line is hot.	a. Shortage of refrigerant.	a. Call service technician.	- - -
5. Excessive mix leakage through the rear of the unit into the drip pan.	a. Worn or missing drive shaft seal.	a. Replace worn, nicked or missing drive shaft seal.	17
	b. Inadequate lubrication.	b. Lubricate properly.	17
6. Product is not being fed into the freezing cylinder.	a. Inadequate mix in hopper. (mix out light illuminated)	a. Fill hopper with mix.	21
	b. Incorrect usage of the mix flow regulator.	b. Follow the correct flow regulator adjustment procedures.	21

PROBLEM	PROBABLE CAUSE	REMEDY	PAGE REF.
7. No product is being dispensed with the flow control open.	a. Frozen product.	a. Scrape product away from the door.	- - -
	b. Dasher is rotating counter- clockwise.	b. Call service technician.	- - -
	c. Inadequate mix in hopper. (mix out light illuminated)	c. Fill hopper with mix.	21
	d. Flow regulator is plugged.	d. Brush clean the flow regulator.	25
8. Product is too soft.	a. Bad scraper blades.	a. Replace scraper blades.	18
	b. Dirty condenser (air- cooled).	b. Clean condenser monthly.	27
	c. Mix is outdated.	c. Use fresh mix.	- - -
	d. Refrigerant shortage.	d. Call service technician.	- - -
	e. Flow regulator setting is too high.	e. Call service technician.	- - -
9. Door spout is plugged.	a. Poor scraping.	a. Replace scraper blades.	18
	b. The dasher assembly is damaged.	b. Inspect and replace if necessary.	18
10. No freezer operation when unit is placed in any mode of operation.	a. The unit is unplugged.	a. Plug in the unit.	- - -
	b. Circuit breaker is off or fuse is blown.	b. Turn on the circuit breaker / replace fuse.	- - -
11. Product is too stiff.	a. Flow regulator is set too low.	a. Adjust the flow regulator setting.	21
	b. Flow regulator is incorrectly assembled or is malfunctioning.	b. Re- assemble the flow regulator. If flow regulator malfunctions, call service technician.	20
12. The mix in the hopper is too cold.	a. Temperature is out of adjustment.	a. Call service technician.	- - -
13. The mix in the hopper is too warm.	a. Temperature is out of adjustment.	a. Call service technician.	- - -

PROBLEM	PROBABLE CAUSE	REMEDY	PAGE REF.
14. Drive shaft is stuck in the gear box coupling.	a. The corners of the drive shaft, coupling, or both are rounded.	a. Replace the necessary component(s). Do not lubricate the end of the drive shaft.	17
	b. Mix and lubricant have collected in the drive coupling.	b. Brush clean the rear shell bearing area regularly.	25
15. Freezing cylinder walls are scored.	a. The dasher assembly is damaged.	a. Replace the dasher assembly.	18
	b. The front bearing is either missing or is worn.	b. Install / replace front bearing.	18
16. A “chirping” or squealing sound is coming from the freezing cylinder.	a. The freezing cylinder is starved for mix.	a. Adjust the flow control to allow more mix to enter the freezing cylinder.	21
17. The reset is tripping.	a. The belt is too tight.	a. Call service technician.	- - -
	b. The amperage is too high.	b. Call service technician.	- - -
	c. The dasher is rotating counter- clockwise.	c. Call service technician.	- - -
	d. Faulty reset switch.	d. Call service technician.	- - -
	e. The suction pressure is too low.	e. Call service technician.	- - -
	f. The shaft is too far into the gearbox or is pushing on the door.	f. Call service technician.	- - -
	g. Product is frozen in the freezing cylinder.	g. Call service technician.	- - -

Section 9 Parts Replacement Schedule

PART DESCRIPTION	EVERY 3 MONTHS	EVERY 6 MONTHS	ANNUALLY
Front Bearing	X		
Inner Flow Regulator O- Rings	X		
Draw Plate O- Ring	X		
Freezer Door O- Ring	X		
Drive Shaft Seal	X		
Scraper Blades	X		
Black Bristle Brush - 1” x 2”		Inspect & Replace if Necessary	Minimum
Double Ended Brush		Inspect & Replace if Necessary	Minimum
White Bristle Brush - 3” x 7”		Inspect & Replace if Necessary	Minimum

Section 10 Limited Warranty on Equipment

TAYLOR COMPANY LIMITED WARRANTY ON FREEZERS

Taylor Company, a division of Carrier Commercial Refrigeration, Inc. ("Taylor") is pleased to provide this limited warranty on new Taylor-branded freezer equipment available from Taylor to the market generally (the "Product") to the original purchaser only.

LIMITED WARRANTY

Taylor warrants the Product against failure due to defect in materials or workmanship under normal use and service as follows. All warranty periods begin on the date of original Product installation. If a part fails due to defect during the applicable warranty period, Taylor, through an authorized Taylor distributor or service agency, will provide a new or re- manufactured part, at Taylor's option, to replace the failed defective part at no charge for the part. Except as otherwise stated herein, these are Taylor's exclusive obligations under this limited warranty for a Product failure. This limited warranty is subject to all provisions, conditions, limitations and exclusions listed below and on the reverse (if any) of this document.

Product	Part	Limited Warranty Period
Soft Serve	Insulated shell assembly	Five (5) years
Frozen Yogurt **Shakes**	Refrigeration compressor (except service valve)	Five (5) years
Smoothies	Beater motors	Two (2) years
Frozen Beverage	Beater drive gear	Two (2) years
Batch Desserts	Printed circuit boards and Softech controls beginning with serial number H8024200	Two (2) years
	Parts not otherwise listed in this table or excluded below	One (1) year

LIMITED WARRANTY CONDITIONS

1. If the date of original installation of the Product cannot be verified, then the limited warranty period begins ninety (90) days from the date of Product manufacture (as indicated by the Product serial number). Proof of purchase may be required at time of service.
2. This limited warranty is valid only if the Product is installed and all required service work on the Product is performed by an authorized Taylor distributor or service agency, and only if genuine, new Taylor parts are used.
3. Installation, use, care, and maintenance must be normal and in accordance with all instructions contained in the Taylor Operator's Manual.
4. Defective parts must be returned to the authorized Taylor distributor or service agency for credit.
5. The use of any refrigerant other than that specified on the Product's data label will void this limited warranty.

LIMITED WARRANTY EXCEPTIONS

This limited warranty does **not** cover:

1. Labor or other costs incurred for diagnosing, repairing, removing, installing, shipping, servicing or handling of defective parts, replacement parts, or new Products.
2. Normal maintenance, cleaning and lubrication as outlined in the Taylor Operator's Manual, including cleaning of condensers.

131122

3. Replacement of wear items designated as Class “000” parts in the Taylor Operator’s Manual.
4. External hoses, electrical power supplies, and machine grounding.
5. Parts not supplied or designated by Taylor, or damages resulting from their use.
6. Return trips or waiting time required because a service technician is prevented from beginning warranty service work promptly upon arrival.
7. Failure, damage or repairs due to faulty installation, misapplication, abuse, no or improper servicing, unauthorized alteration or improper operation or use as indicated in the Taylor Operator’s Manual, including but not limited to the failure to use proper assembly and cleaning techniques, tools, or approved cleaning supplies.
8. Failure, damage or repairs due to theft, vandalism, wind, rain, flood, high water, water, lightning, earthquake or any other natural disaster, fire, corrosive environments, insect or rodent infestation, or other casualty, accident or condition beyond the reasonable control of Taylor; operation above or below the electrical or water supply specification of the Product; or components repaired or altered in any way so as, in the judgment of the Manufacturer, to adversely affect performance, or normal wear or deterioration.
9. Any Product purchased over the Internet.
10. Failure to start due to voltage conditions, blown fuses, open circuit breakers, or damages due to the inadequacy or interruption of electrical service.
11. Electricity or fuel costs, or increases in electricity or fuel costs from any reason whatsoever.
12. Damages resulting from the use of any refrigerant other than that specified on the Product’s data label will void this limited warranty.
13. Any cost to replace, refill or dispose of refrigerant, including the cost of refrigerant.
14. **ANY SPECIAL, INDIRECT OR CONSEQUENTIAL PROPERTY OR COMMERCIAL DAMAGE OF ANY NATURE WHATSOEVER.** Some jurisdictions do not allow the exclusion of incidental or consequential damages, so this limitation may not apply to you.

This limited warranty gives you specific legal rights, and you may also have other rights which vary from jurisdiction to jurisdiction.

LIMITATION OF WARRANTY

THIS LIMITED WARRANTY IS EXCLUSIVE AND IS IN LIEU OF ALL OTHER WARRANTIES, CONDITIONS AND/OR REMEDIES UNDER THE LAW, INCLUDING ANY IMPLIED WARRANTIES OR CONDITIONS OF MERCHANTABILITY OR FITNESS FOR A PARTICULAR PURPOSE. THE ORIGINAL OWNER’S SOLE REMEDY WITH RESPECT TO ANY PRODUCTS SHALL BE REPAIR OR REPLACEMENT OF DEFECTIVE COMPONENTS UNDER THE TERMS OF THIS LIMITED WARRANTY. ALL RIGHTS TO CONSEQUENTIAL OR INCIDENTAL DAMAGES (INCLUDING CLAIMS FOR LOST SALES, LOST PROFITS, PRODUCT LOSS, PROPERTY DAMAGES OR SERVICE EXPENSES) ARE EXPRESSLY EXCLUDED. THE EXPRESS WARRANTIES MADE IN THIS LIMITED WARRANTY MAY NOT BE ALTERED, ENLARGED, OR CHANGED BY ANY DISTRIBUTOR, DEALER, OR OTHER PERSON, WHATSOEVER.

LEGAL REMEDIES

The owner **must** notify Taylor in writing, by certified or registered letter to the following address, of any defect or complaint with the Product, stating the defect or complaint and a specific request for repair, replacement, or other correction of the Product under warranty, mailed at least thirty (30) days before pursuing any legal rights or remedies.

Taylor Company
a division of Carrier Commercial Refrigeration, Inc.
750 N. Blackhawk Blvd.
Rockton, IL 61072, U.S.A.

Section 11 Limited Warranty on Parts

TAYLOR COMPANY LIMITED WARRANTY ON TAYLOR GENUINE PARTS

Taylor Company, a division of Carrier Commercial Refrigeration, Inc. ("Taylor") is pleased to provide this limited warranty on new Taylor genuine replacement components and parts available from Taylor to the market generally (the "Parts") to the original purchaser only.

LIMITED WARRANTY

Taylor warrants the Parts against failure due to defect in materials or workmanship under normal use and service as follows. All warranty periods begin on the date of original installation of the Part in the Taylor unit. If a Part fails due to defect during the applicable warranty period, Taylor, through an authorized Taylor distributor or service agency, will provide a new or re- manufactured Part, at Taylor's option, to replace the failed defective Part at no charge for the Part. Except as otherwise stated herein, these are Taylor's exclusive obligations under this limited warranty for a Part failure. This limited warranty is subject to all provisions, conditions, limitations and exclusions listed below and on the reverse (if any) of this document.

Part's Warranty Class Code or Part	Limited Warranty Period
Class 103 Parts[1]	Three (3) months
Class 212 Parts[2]	Twelve (12) months
Class 512 Parts	Twelve (12) months
Class 000 Parts	No warranty
Taylor Part #072454 (Motor- 24VDC *C832/C842*)	Four (4) years

LIMITED WARRANTY CONDITIONS

1. If the date of original installation of the Part cannot be otherwise verified, proof of purchase may be required at time of service.
2. This limited warranty is valid only if the Part is installed and all required service work in connection with the Part is performed by an authorized Taylor distributor or service agency.
3. The limited warranty applies only to Parts remaining in use by their original owner at their original installation location in the unit of original installation.
4. Installation, use, care, and maintenance must be normal and in accordance with all instructions contained in the Taylor Operator's Manual.
5. Defective Parts must be returned to the authorized Taylor distributor or service agency for credit.
6. This warranty is not intended to shorten the length of any warranty coverage provided pursuant to a separate Taylor Limited Warranty on freezer or grill equipment.
7. The use of any refrigerant other than that specified for the unit in which the Part is installed will void this limited warranty.

[1, 2] Except that Taylor Part #032129SER2 (Compressor-Air-230V SERV) and Taylor Part #075506SER1 (Compressor-Air-115V 60HZ) shall have a limited warranty period of twelve (12) months when used in Taylor freezer equipment and a limited warranty period of two (2) years when used in Taylor grill equipment.

131122

LIMITED WARRANTY EXCEPTIONS

This limited warranty does **not** cover:

1. Labor or other costs incurred for diagnosing, repairing, removing, installing, shipping, servicing or handling of defective Parts, replacement Parts, or new Parts.
2. Normal maintenance, cleaning and lubrication as outlined in the Taylor Operator's Manual, including cleaning of condensers or carbon and grease buildup.
3. Required service, whether cleaning or general repairs, to return the cooking surface assemblies, including the upper platen and lower plate, to an operational condition to achieve proper cooking or allow proper assembly of release sheets and clips as a result of grease build-up on the cooking surfaces, including but not limited to the platen and plate, sides of the shroud or top of the shroud.
4. Replacement of cooking surfaces, including the upper platen and lower plate, due to pitting or corrosion (or in the case of the upper platen, due to loss of plating) as a result of damage due to the impact of spatulas or other small wares used during the cooking process or as a result of the use of cleaners, cleaning materials or cleaning processes not approved for use by Taylor.
5. Replacement of wear items designated as Class "000" Parts in the Taylor Operator's Manual, as well as any release sheets and clips for the Product's upper platen assembly.
6. External hoses, electrical power supplies, and machine grounding.
7. Parts not supplied or designated by Taylor, or damages resulting from their use.
8. Return trips or waiting time required because a service technician is prevented from beginning warranty service work promptly upon arrival.
9. Failure, damage or repairs due to faulty installation, misapplication, abuse, no or improper servicing, unauthorized alteration or improper operation or use as indicated in the Taylor Operator's Manual, including but not limited to the failure to use proper assembly and cleaning techniques, tools, or approved cleaning supplies.
10. Failure, damage or repairs due to theft, vandalism, wind, rain, flood, high water, water, lightning, earthquake or any other natural disaster, fire, corrosive environments, insect or rodent infestation, or other casualty, accident or condition beyond the reasonable control of Taylor; operation above or below the gas, electrical or water supply specification of the unit in which a part is installed; or Parts or the units in which they are installed repaired or altered in any way so as, in the judgment of Taylor, to adversely affect performance, or normal wear or deterioration.
11. Any Part purchased over the Internet.
12. Failure to start due to voltage conditions, blown fuses, open circuit breakers, or damages due to the inadequacy or interruption of electrical service.
13. Electricity, gas or other fuel costs, or increases in electricity or fuel costs from any reason whatsoever.
14. Damages resulting from the use of any refrigerant other than that specified for the unit in which the Part is installed will void this limited warranty.
15. Any cost to replace, refill or dispose of refrigerant, including the cost of refrigerant.
16. **ANY SPECIAL, INDIRECT OR CONSEQUENTIAL PROPERTY OR COMMERCIAL DAMAGE OF ANY NATURE WHATSOEVER.** Some jurisdictions do not allow the exclusion of incidental or consequential damages, so this limitation may not apply to you.

This limited warranty gives you specific legal rights, and you may also have other rights which vary from jurisdiction to jurisdiction.

LIMITATION OF WARRANTY

THIS LIMITED WARRANTY IS EXCLUSIVE AND IS IN LIEU OF ALL OTHER WARRANTIES, CONDITIONS AND/OR REMEDIES UNDER THE LAW, INCLUDING ANY IMPLIED WARRANTIES OR CONDITIONS OF MERCHANTABILITY OR FITNESS FOR A PARTICULAR PURPOSE. THE ORIGINAL OWNER'S SOLE REMEDY WITH RESPECT TO ANY PRODUCTS SHALL BE REPAIR OR REPLACEMENT OF DEFECTIVE PARTS UNDER THE TERMS OF THIS LIMITED WARRANTY. ALL RIGHTS TO CONSEQUENTIAL OR INCIDENTAL DAMAGES (INCLUDING CLAIMS FOR LOST SALES, LOST PROFITS, PRODUCT LOSS, PROPERTY DAMAGES OR SERVICE EXPENSES) ARE EXPRESSLY EXCLUDED. THE EXPRESS WARRANTIES MADE IN THIS LIMITED WARRANTY MAY NOT BE ALTERED, ENLARGED, OR CHANGED BY ANY DISTRIBUTOR, DEALER, OR OTHER PERSON, WHATSOEVER.

LEGAL REMEDIES

The owner **must** notify Taylor in writing, by certified or registered letter to the following address, of any defect or complaint with the Part, stating the defect or complaint and a specific request for repair, replacement, or other correction of the Part under warranty, mailed at least thirty (30) days before pursuing any legal rights or remedies.

Taylor Company
a division of Carrier Commercial Refrigeration, Inc.
750 N. Blackhawk Blvd.
Rockton, IL 61072, U.S.A.

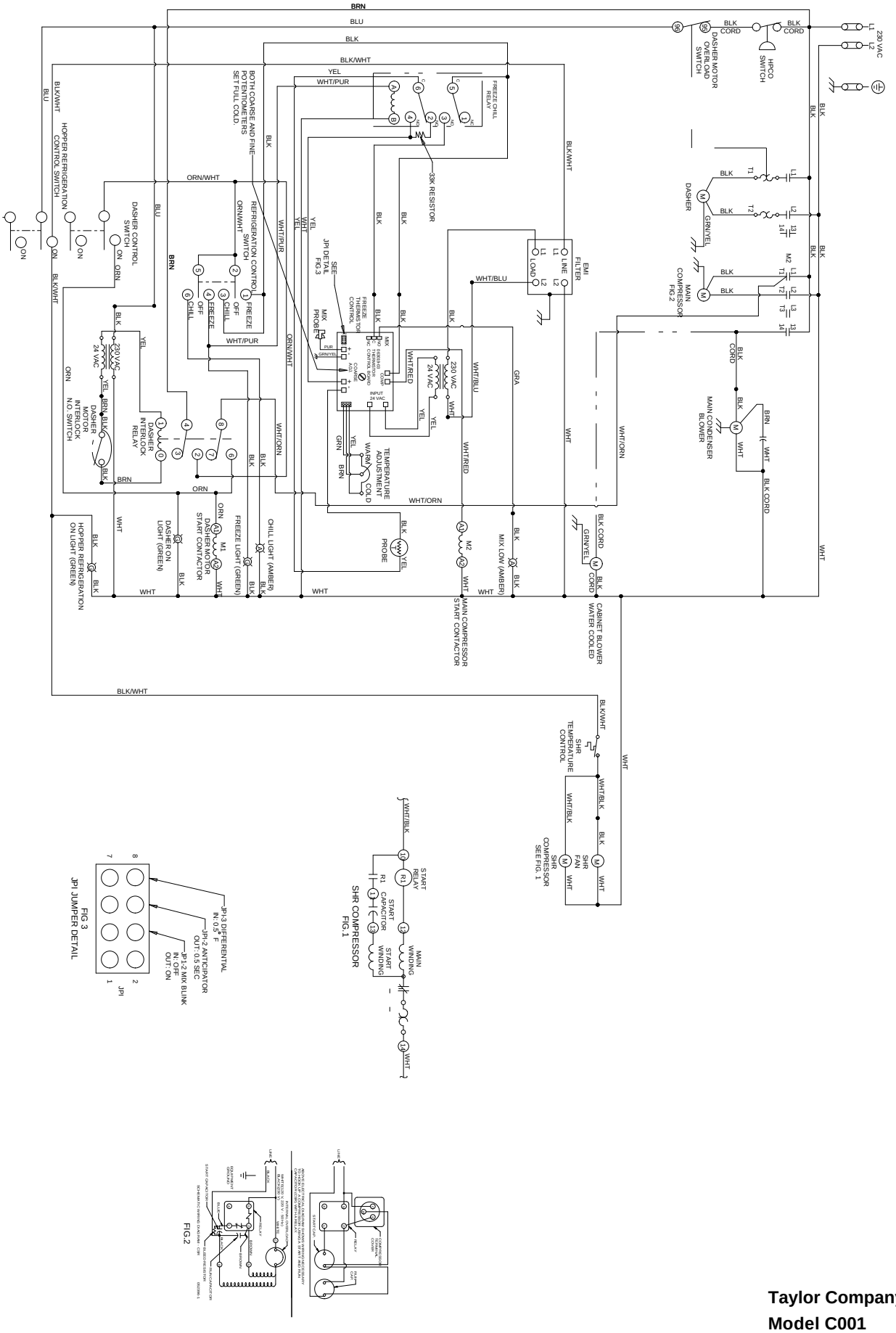

Taylor Company
Model C001
066684-27
08/14

© 2014 Carrier Commercial Refrigeration, Inc.

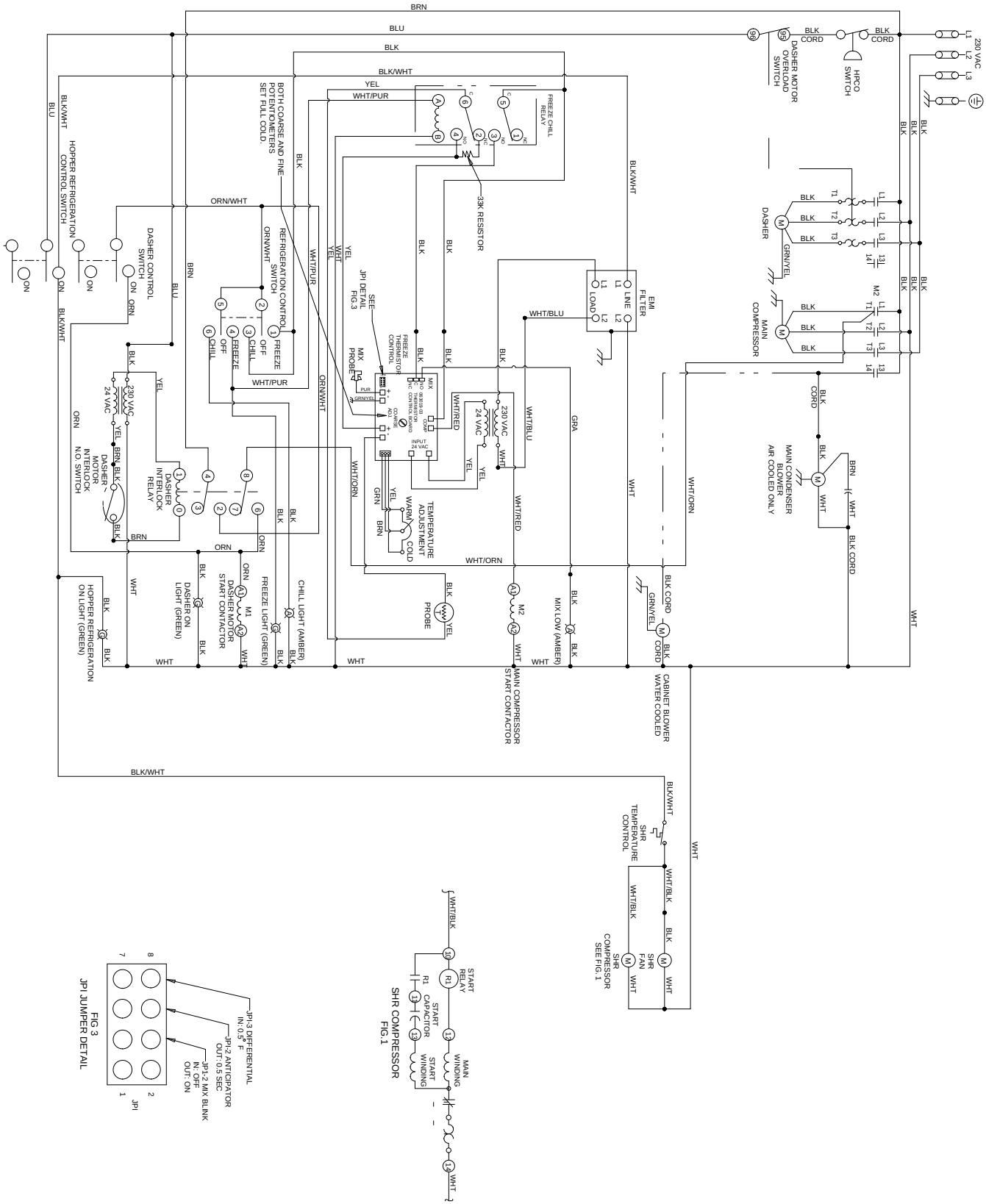

Taylor Company
Model C001
066684-33
08/14

© 2014 Carrier Commercial Refrigeration, Inc.

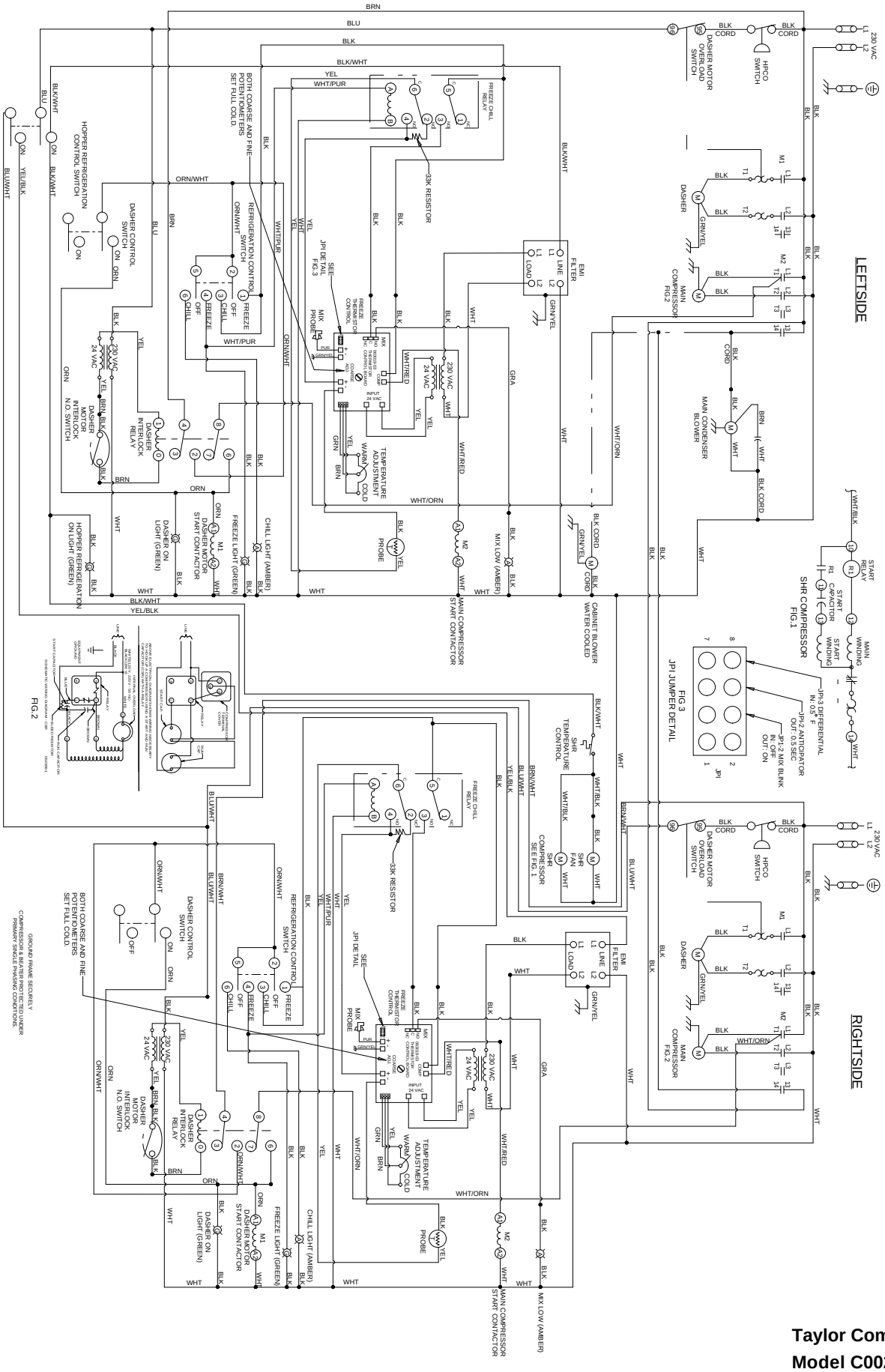

Taylor Company
Model C002
063371-27
08/14

© 2014 Carrier Commercial Refrigeration, Inc.

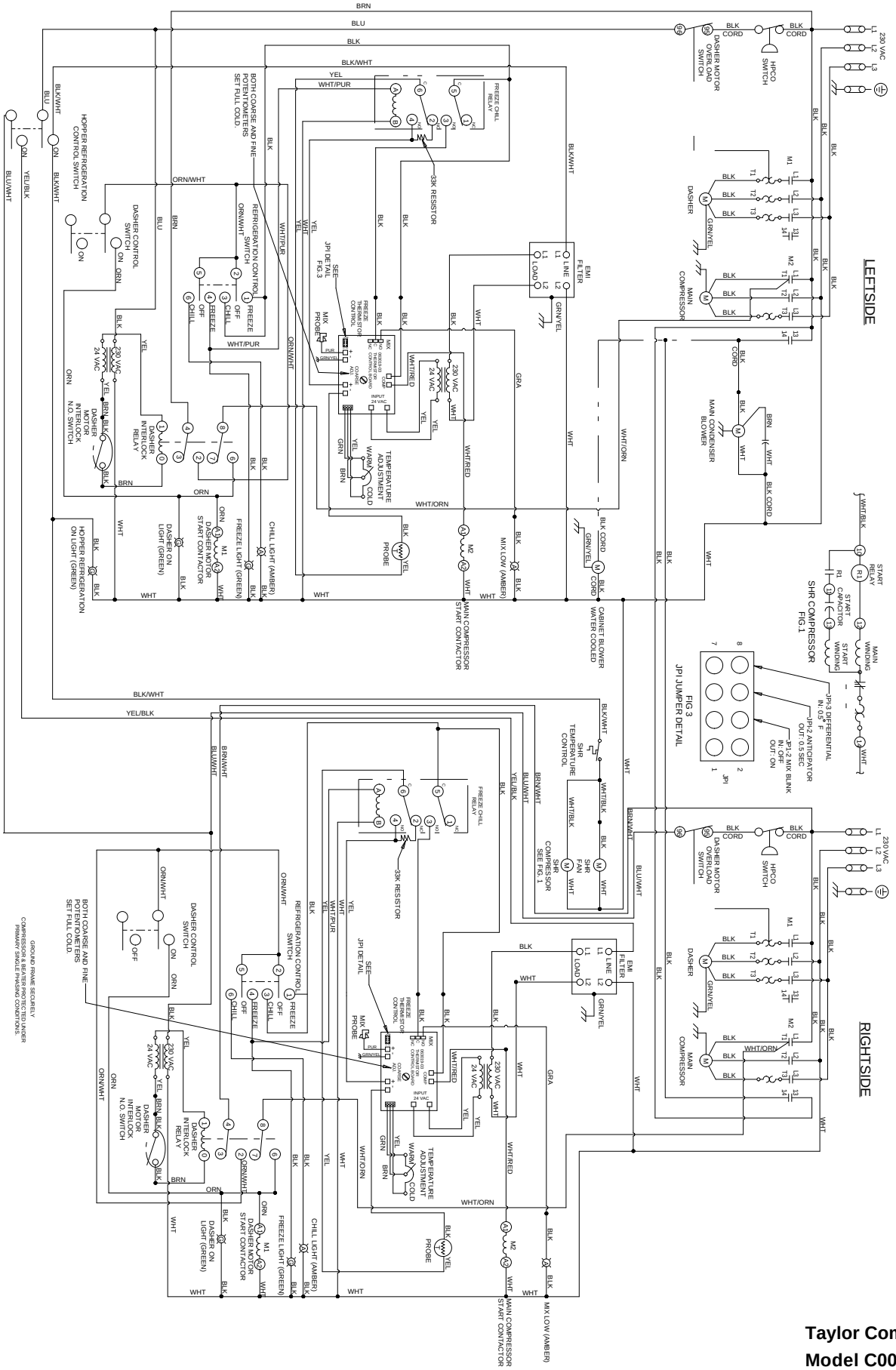

Taylor Company
Model C002
063371-33
08/14

© 2014 Carrier Commercial Refrigeration, Inc.

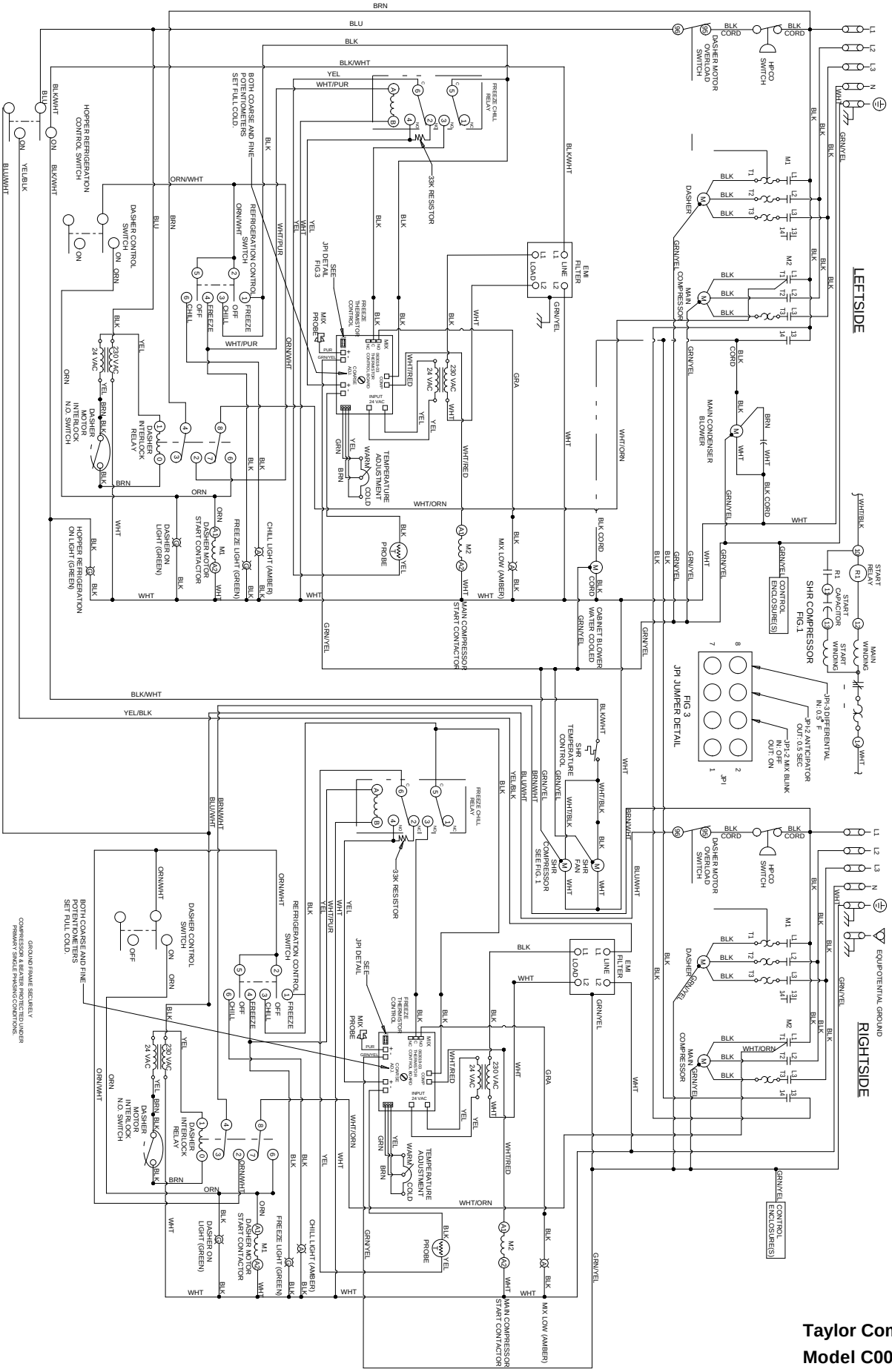

Taylor Company
Model C002
063371-58
08/14

© 2014 Carrier Commercial Refrigeration, Inc.