Food Preparation Machines
Made in Sweden

MANUFACTURER
HALLDE

MODEL
RG-400i

PRODUCT DESCRIPTION
Vegetable Preparation Machine process up to 2,4 tons/ hour

ORIGIN
Sweden

SPECIFICATION

SPECIFICATION TEXT	Floor standing Vegetable Preparation Machine with a full moon, 9 litre Feed Cylinder, made to process up to 2.4 tons/ hour or 3 000 portions/day. Feed Cylinders, Feeders and Cutting Tools made of stainless steel, can be cleaned in a dishwasher machine. The machine has two speeds (200 and 400 rpm). The legs of the machine have two adjustable feet and two feet with wheels. Cutting tools made of stainless steel/ aluminum with removable knifes/plates, 215 mm in diameter. The motor with the maintenance free planetary gearing, rotates clock wise.
FUNCTION	Machine for slicing, dicing, shredding, grating, cutting julienne and French fries. Processes fruit, vegetables, dry bread, cheese, nuts, mushrooms, etc.
CAPACITY	Up to 3 000 portions/day, 9 litre Feed Cylinder. Up to 2.4 tons/ hour with the Feed Hopper, up to 900 kg/ hour with other feeder.
MATERIAL	Machine base, Feed Cylinders and Feeders: Stainless steel. Cutting tools: Stainless steel/ Aluminum. Cutting tool knife blades: Stainless knife steel.
MOTOR	1.5/0.9 kW. Two speeds (200 and 400 rpm). Thermal protection, maintenance free planetary gearing. 208-240 V, 3-phase, 60 Hz. | 220-240 V, 3-phase, 50/60 Hz. 380 V, 3-phase, 60 Hz. | 400-415 V, 3-phase, 50 Hz. 440 V, 3-phase, 60 Hz.
POWER SUPPLY	Earthed, three phase, 16 A. Fuse: 10 A delayed action fuse.
STANDARDS	EN 1678+A1:2010.

RECOMMENDED PACKAGES

INCLUDING	NET WEIGHT	START PACK	STANDARD PACK	FULL FLEX
• RG-400i Machine Base / 400 3N 50	63 kg	X	X	X
• Feed Cylinder A	6 kg	X	X	X
• 4-Tube Insert incl. 2 pestles	5 kg	X	X	X
• Manual Push Feeder, Ergo Loop	7.5 kg	X	X	
• Feed Hopper incl. Feed Cylinder	14.5 kg		X	X
• Pneumatic push feeder	12 kg			X
• Container Trolley incl. GN 1/1 container	9 kg	X	X	X
• Accessories Trolley, stainless steel	17 kg		X	X
• Tray, stainless steel	1.5 kg		X	X
• Compressor 230 1 50	40 kg			X
• 6-pack Cutting Tools – Slicer 1.5 mm – Slicer 4 mm – Slicer 6 mm – Slicer 10 mm – Grater/Shredder 4.5 mm – Dicing Grid 10x10 mm	6 kg	X		
• 9-pack Cutting Tools – Slicer 1.5 mm – Slicer 4 mm – Slicer 6 mm – Slicer 10 mm – Julienne Cutter 4x4 mm – Grater/Shredder 2 mm – Grater/Shredder 4.5 mm – Fine Grater – Dicing Grid 10x10 mm	9 kg		X	X

WEIGHT/VOLUME

CONTENT	PACKAGES	FREIGHT WEIGHT	FREIGHT VOLUME
Start Pack excl. Container Trolley	1	126 kg	0.706 m³
Standard Pack excl. Container- and Accessories Trolley	1	145 kg	0.706 m³
Full Flex excl. Compressor, Container- and Accessories Trolley	1	150 kg	0.706 m³
Container Trolley incl. GN 1/1 container	1	12.5 kg	0.15 m³
Accesssories Trolley	1	30 kg	0.63 m³
Compressor	1	61 kg	0.576 m³
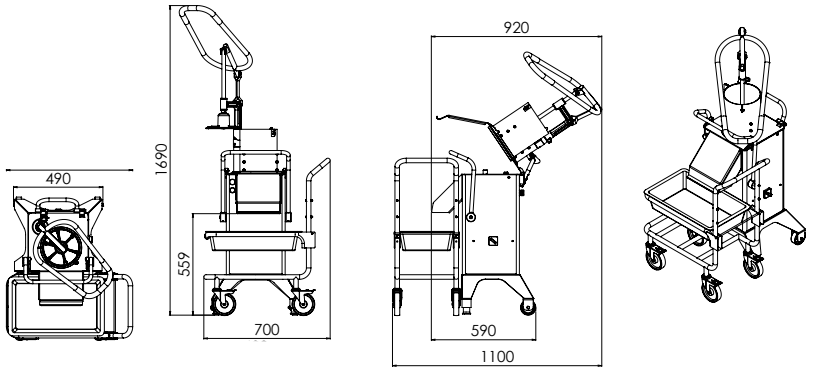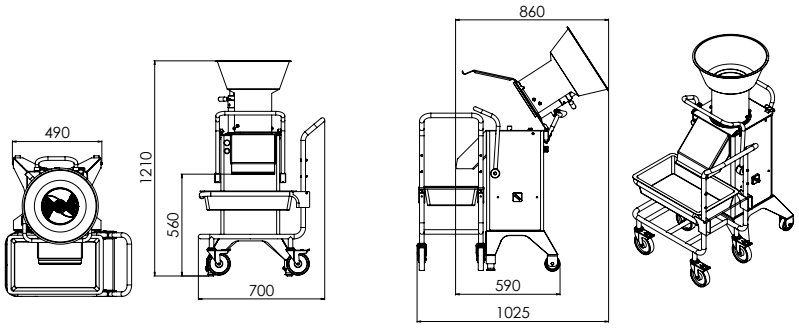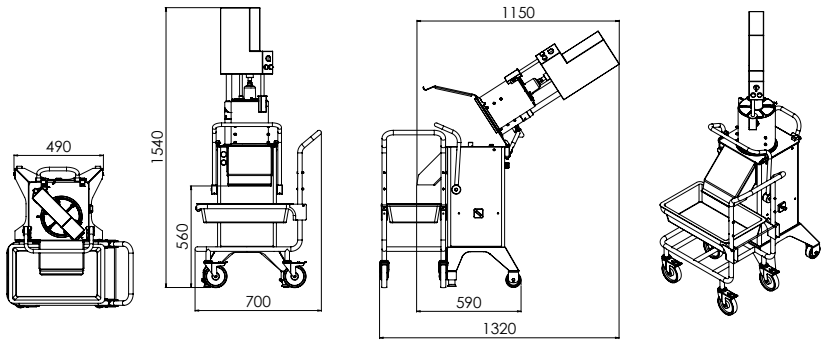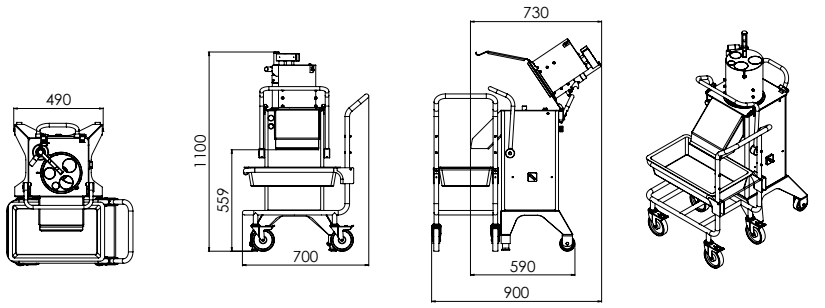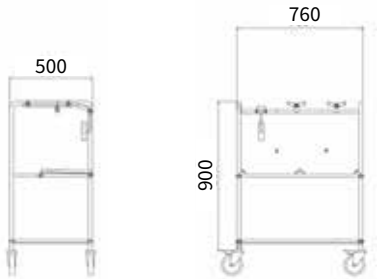
SAFETY	2014/30/EU, 2014/35/EU, 2006/42/EG, 2011/65/EU, no 10/2011
DIRECTIVE AND REGULATION	CE approved. Three safety switches. Machine safety: IP45, buttons IP65.
DRAWINGS	The drawings below can be downloaded at hallde.com.