VITAECO S.r.l.
Via Bazzini, 241
41122 Modena - Italy
Tel. +39 059 4924149
Fax +39 059 282735
www.hotmixpro.com
info@hotmixpro.com

Hotmix PRO COMBI

COOKING PLEASURE

made in Italy

INSTRUCTION MANUAL

IMPORTANT NOTICE

“WAIT TEMPERATURE” FUNCTION

When you get informed that a recipe (or a step of it) has been completed after reaching a set temperature, and you wish to keep the ingredients at this steady temperature for a while, you need to use the “WAIT TEMPERATURE” function.
HOTMIX PRO is capable to find and keep the wished temperature for the programmed time.
With this function, the initial temperature of the ingredients is NOT RELEVANT, therefore you get the same results any time.
HOTMIX PRO starts the time countdown when the PROGRAMMED temperature has been reached.

ACCESS TO THE FUNCTION

- Press the temperature icon for 3 seconds, till you hear a beep
- The display will show: WAIT TEMP, together with the Temperature icon
- Set the wished temperature
- Press the time icon
- The display will show: WAIT TEMP, together with the Time icon
- Set the wished time

TECHNICAL SPECIFICATIONS

Power supply: 110÷240 V. 50/60Hz

HOT SIDE:
Motor power: 1500 W
Heater power: 800 W

COLD SIDE:
Motor power: 1500W
Cooling power: 250W

Refrigerating Power:
[Btu/h] – 1198
[kcal/h] – 302
[W] – 351 (+/- 5%)

Bowl: Stainless Steel
Max Capacity: 2 litres 1 lt in creaming phase
Overall dimensions: (H x W. X D) 34 cm x 61 cm x 47 cm
Weight: Kg. 40,00

NOTES

CONTENTS

General information ..... *page* 4
Warnings ..... *page* 5
Freight, package and storage ..... *page* 6
Instructions for use ..... *page* 7
Product description ..... *page* 8
Machine devices ..... *page* 9
Accessories ..... *page* 11
Cleaning ..... *page* 15
How to operate ..... *page* 15
How to use the product properly ..... *page* 26
Recycling and waste disposal ..... *page* 28
Index programs and recipes ..... *page* 30
Technical specifications ..... *page* 47

Please read carefully this manual prior to the first use of the appliance.

It is fundamental to get the best results out of the product and the highest level of safety.

GENERAL INFORMATION

About the manual
This manual contains information on installation, operation and maintenance of the equipment and must be consulted as a reference guide.
Reading this book provides a safe and proper use of the appliance.
In addition to the information provided with this manual, you must comply with local health standards and applicable general safety regulations.
The instruction manual is an integral part of the product, and should be kept near the equipment and easily accessible to anyone who makes the installation, care and cleaning.

Symbols
In this manual, symbols are used to highlight important safety instructions and any warning.
The instructions must be followed very carefully to avoid any risk of accidents, personal injury and / or damage to things and people.

This symbol highlights the dangers that might cause injury and / or damage.

WARNING Electricity Danger!
This symbol points out potential electricity hazard.

WARNING! This symbol highlights instructions that must be followed to avoid risks, damage, malfunction, and/or breaking of the appliance.

This symbol highlights tips and information that must be followed for the efficient operation of the appliance.

NOTE!
Read the instruction manual carefully before using the appliance. The manufacturer disclaims any liability resulting from non-compliance with these instructions for use. The instruction manual must always be kept near the equipment and easily accessible for anyone wishing to consult it. We reserve the right to make unannounced changes to improve the technical specifications and / or the development of the product.

Compliance Statement
The appliance has been built in accordance with the current standards and the international safety directives.

DRINKS

01 - CAPPUCCINO
02 - IRISH COFFEE
03 - CHOCOLATE MILK-SHAKE
04 - APRICOT MILK-SHAKE
05 - ANANAS AND KIWI MILK-SHAKE
06 - ANANAS AND MELON MILK-SHAKE
07 - BANANA AND STRAWBERRY MILK-SHAKE
08 - BANANA AND HONEY MILK-SHAKE
09 - ANANAS AND PAPAYA MILK-SHAKE
10 - PASSION FRUIT MILK-SHAKE
11 - BATIDA DE BANANA
12 - ALEXANDER
13 - BLOODY MARY
14 - WHISKY CREAM
15 - FROZEN STRAWBERRY DAIQUIRI
16 - GIN FIZZ
17 - GRANITA DAIQUIRI
18 - MINT MOJITO
19 - PINA COLADA
20 - SANGRIA

18 - LEMON CURD
19 - LEMON CREAM FOR CAKES
20 - BUTTER CREAM FOR CAKES
21 - AROMATISABLE WATER ICING
22 - ICING ROYALE
23 - TRADITIONAL TIRAMISU
24 - PASTEURIZED TIRAMISU
25 - AROMATISABLE CHOCOLATE GANACHE
26 - CHOCOLATE GANACHE
27 - CARAMELIZED ORANGE GANACHE
28 - GANACHE MOUSSELINE
29 - LEMON MOUSSE
30 - HAZELNUT MOUSSE WITH CANDIED FRUIT
31 - CREMOSO WITH CHOCOLATE
32 - CREMOSO WITH CARAMEL
33 - CREMOSO WITH EXOTIC FRUIT
34 - ICECOLD SOUFFLE
35 - ITALIAN DESSERT
36 - SPECULOOS
37 - HALVA WITH CARROTS
38 - POACHED PEACHES
39 - BRITTLE
40 - COATED ALMONDS
41 - COATED HAZELNUTS
42 - CARAMEL SAUCE
43 - CARAMEL SAUCE AND SALTY BUTTER
44 - BUTTERSCOTCH SAUCE FOR ICE CREAM
45 - ORANGE SAUCE WITH RED FRUITS
46 - COLD SAUCE WITH RED FRUITS
47 - SYRUP FOR BABA AND SORBETS
48 - SYRUP FOR SOAKING IN ALCOHOL AND BAVARIAN WITH FRUIT
49 - SYRUP FOR PRESERVED FRUIT
50 - SYRUP FOR PARFAIT
51 - SYRUP FOR SAVARIN
52 - FIGS SORBET
53 - SORBET WITH COINTREAU
54 - SORBET WITH PORT WINE
55 - SORBET WITH STRAWBERRIES AND PROSECCO
56 - CHAMPAGNE SORBET

WARNINGS BEFORE USE

• Before using the appliance, please check that the voltage of the electricity grid corresponds to the one indicated on the label of the device. Only connect the machine to an outlet that has a minimum capacity of 10 A and an effective grounding system.

• The electrical safety of this equipment is guaranteed only if the same is connected directly to an AC grounded socket as required by the applicable electrical safety standards. The manufacturer cannot be held responsible for any damage caused by a lack of connection to ground the appliance. In case of doubt, contact a professionally qualified technician.

• After you've unwrapped the equipment, ensure the integrity of the unit. In case of doubt, do not use the appliance and contact qualified personnel only.

• We do not recommend the use of adapters, multiple plugs and / or extension cords. If absolutely necessary to use one of these devices, you must only use single or multiple adapters conform to current safety standards, being careful not to exceed the power limit specified in the adapter.

• The elements of the packaging (plastic bags, etc..) should not be kept out of reach of children, because they are a potential source of danger.

• This equipment must be used solely for the use described in this manual. Any other use is considered inappropriate and therefore dangerous.

• The manufacturer cannot be held responsible for any damage caused by the equipment when used inappropriately, erroneous and irrational, and / or repair by unqualified personnel.

• Do not touch the appliance with hands and / or feet if wet or damp.

• Do not remove the plug from pulling the power cord.

• Do not leave the unit exposed to the weather (rain, sun, frost, etc.).

• This appliance is not intended for use by persons (including children) with reduced physical or mental ability, or lack of experience and knowledge, unless they have been instructed on the use of the equipment by personnel responsible for their security.

• Ensure that children do not play with the appliance.

• Before carrying out any cleaning or maintenance, disconnect the appliance from the mains supply by removing the plug.

• Never immerse the appliance in the water to clean it.

• Never mount the blades in the bowl without sealing.

• Use only the supplied spatula to stir the preparations.

• Do not ever cook with the empty bowl.

• Never place the entire unit under the tap to introduce water into the bowl.

• Never lift the appliance by holding the handle of the bowl.

• Do not cover the inlet and ventilation openings on the rear and on the sides of the unit.

• In case of breakdown or malfunctioning, turn it off and do not open it. For repairs, contact only a service facility authorized by the manufacturer and ask the use of original spare parts. Failure to comply with this rule may jeopardize the safety of the appliance.

• When you decide to permanently delete the device, after removing the plug from the socket, it is recommended the cutting of the power cord.

• If the power cord is damaged, it must only be replaced at a service centre authorized by the manufacturer, so as to prevent any risk.

• When not using the unit, disconnect the plug from the mains and turn off the switch. Do not leave the device connected to the mains if it is not necessary.

• The unit cannot be used after a fall or in case of imperfections or losses. Before returning to use it will need to be brought to an authorized service centre.

• Keep this instruction manual, because it may be necessary to consult it in the future.

• This device complies with European Community rules in relation to electromagnetic compatibility.

FREIGHT, PACKAGE AND STORAGE

Shipping control

Check shipping claims regarding damage caused by transport immediately after receipt.
In case of apparent damage, accept the shipment only under reserve. Please note the extent of the damage on the transport document.

Packaging

Do not throw away the packaging of your appliance, because it could be useful for storage, when transported or in case of damage for the return to centre.
The inner and outer envelope must be completely removed from the equipment before installing it.

11 - GORGONZOLA MOUSSE
12 - MOUSSE WITH HAM AND GORGONZOLA
13 - CREAMY GREEN MOUSSE WITH PARMESAN CHEESE
14 - MOUSSE WITH THUNA AND CAPERS
15 - RICOTTA WITH HERBS
16 - SMOKED PATE (HERRINGS)
17 - AVOCADO PATE
18 - CREAMED COD
19 - TARTARE WITH SHRIMPS IN AVOCADO MOUSSE
20 - SAVOURY KOUGELHOF AUX ESCARGOTS
21 - QUICHE LORRAINE
22 - QUICHE SANS PATE
23 - SAVOURY QUICHE WITH ARTICHOKES
24 - SAVOURY CAKE WITH ASPARAGUS AND SALMON
25 - FALAFEL
26 - POTATO AND PUMPKIN CROQUETTES WITH ALMONDS
27 - TOMATO GELE
28 - LITTLE NEST OF FRIED COD
29 - PANNA COTTA WITH THUNA
30 - SWEET SOUFFLE WITH CHEESE
31 - LITTLE CAKE WITH POTATOES AND CELERIAC

DESSERT, SORBET

01 - PASTRY CREAM
02 - PASTRY CREAM WITH FRUCTOSE
03 - PASTRY CREAM H2O
04 - PASTRY CREAM WITH COFFEE
05 - PASTRY CREAM WITH PASSION FRUIT
06 - CREME CARAMEL
07 - ENGLISH CREAM
08 - ZABAGLIONE WITH ORANGES
09 - DIPLOMATIC CREAM
10 - DIPLOMATIC CREAM WITH CACAO
11 - DIPLOMATIC CREAM WITH CINNAMON
12 - CARAMEL MOU
13 - MOUSSELINE CREAM
14 - PRINCE CREAM
15 - SAINT-HONORE CREAM
16 - SAINT-HONORE CREAM WITH CHOCOLATE
17 - SAINT-HONORE CREAM WITH LEMON

15 - OYSTER CREAMSOUP
16 - VICHYSSOISE

RICE, RISOTTO, SAUCES FOR PASTA

01 - JAPANESE RICE FOR SUSHI AND SASHIMI
02 - PILAF RICE
03 - RISOTTO ALLA MILANESE
04 - OYSTER GREY RISOTTO
05 - RISOTTO WITH STRAWBERRIES
06 - RISOTTO WITH BRETAGNE SMELLS
07 - RISOTTO WITH PRAWNS AND ROQUEFORT
08 - PUMPKIN RISOTTO
09 - RISOTTO WITH ZUCCHINE AND MUSSELS
10 - PESTO ALLA GENOVESE
11 - PESTO WITH ALMONDS
12 - PESTO WITH ROCKET
13 - PESTO WITH ZUCCHINE
14 - RAGU ALLA BOLOGNESE
15 - CARBONARA
16 - MEAT SAUCE FROM THE COURTYARD
17 - WHITE CLAMSSAUCE
18 - RED CLAMSSAUCE
19 - SAUCE WITH LITTLE TOMATOES AND BASIL
20 - SAUCE WITH SAUSAGE AND CHAMPIGNONS
21 - SAUCE WITH TOMATOES AND RICOTTA
22 - SAUCE WITH CHICORY COCONUT AND BACON
23 - TAGLIOLINI WITH MEAT SAUCE FROM THE COURTYARD
24 - TORTELLINI OF CREAMED COD

STUFFINGS, PATES, SAVOURY CAKES

01 - CHAMPIGNON STUFFING
02 - SALMON STUFFING
03 - STUFFING WITH CHICKEN OR VEAL
04 - STUFFING WITH HAM AND EWE'S CHEESE
05 - STUFFING WITH HAM AND PISTACHIO NUTS
06 - CREAM FOR STUFFING WITH CAMEMBERT
07 - MOUSSE OF EWE'S CHEESE WITH OLIVE PASTE
08 - MOUSSE OF THUNA AND MONTASIO CHEESE
09 - HAM MOUSSE
10 - MOUSSE WITH CAMEMBERT AND HAZELNUTS

PLEASE NOTE!
In case you should bring the machine back to your dealer, please use exclusively the original package: any break or fault caused by transport damages due to lack of the original package could be charged to you.
If you want to throw away the package, please consider the recycling regulations in your country. Check the equipment and the presence of all components. In case of missing parts, please contact our customer service immediately.

Storage

Keep the packaging closed till it will be installed, taking into account the marking on the packaging.
The packaging must be stored, taking into consideration the following: - Do not store it outdoor. - Keep in a dry place away from dust. - Do not expose to corrosive elements. - Do not expose to direct sunlight. - Avoid mechanical shock and vibrations. - In case of prolonged storage (> 3 months) make sure that the state of the package and all its parts are in good condition. If necessary, renew the packaging.

INSTRUCTIONS FOR USE

• After taking out the appliance from the packaging, put it on the working table and wait at least 2 hours before turning on the cold side (for the hot side there are no problems).
• Never put upside down the appliance.
• Before using the appliance for the first time, thoroughly clean all the accessories such as bowl, lid, measuring cap, blades, creaming paddle and spatula, following the procedures described afterwards.
• Place the unit on a horizontal surface, far from edges and from heat sources and out of reach of children.
• Keep the machine at least 10 cm far from walls both posteriorly and laterally.
• The maximum capacity of the bowl must never be exceeded. Introducing excessive quantity could result in spilling liquids and, consequently, even irreparable damage to the unit. These failures are not covered by the warranty agreement.
• **Do not use the creaming paddle at speeds higher than 1F.**
• When creaming the mixture for ice cream in the cold side never put into the bowl more than 1LT of mixture, because during the preparation the volume raises a lot.
• Do not introduce your hands (or fingers) into the hole of the lid, you might get cut.
• **TO PREPARE ICE CREAMS AND GRANITA IN THE COLD BOWL, USE ONLY THE SPECIFIC "GELATO-GRANITA" SPEED.**
• **TO PASTEURIZE, USE ONLY THE SPECIFIC "PASTEURIZATION" PROGRAM.**

PRODUCT DESCRIPTION

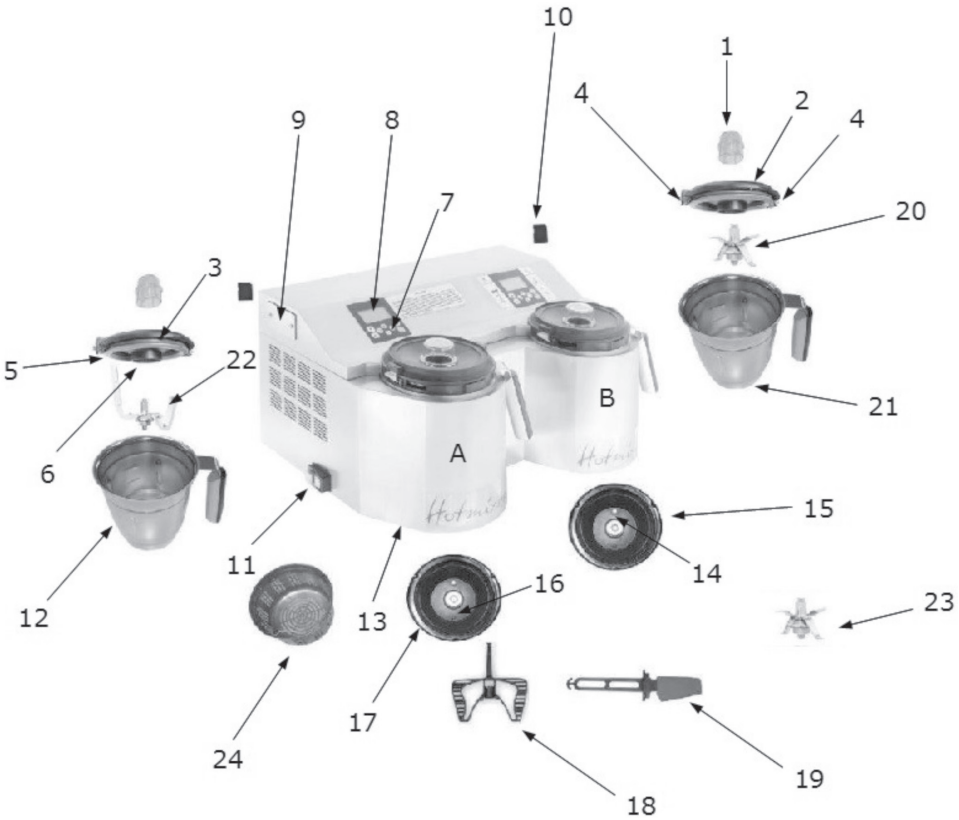

A. COLD SIDE
B. HOT SIDE
1. Measuring cap
2. Lid
3. Magnet
4. Flaps for lid opening and closing
5. Lid gasket
6. Lid hole
7. Control Panel
8. Liquid Crystal Display
9. SD compartment
10. SD card
11. Switching ON/OFF
12. Stainless steel bowl
13. Stabilizing feet
14. NTC probe
15. Heating element
16. Liquid leaking hole
17. Cooling circuit
18. 2x Mixing paddle
19. 2x Spatula
20. Blades set
21. Locking ring for blades set
22. Creaming paddle

Optional accessories
23. Special blades
24. Stainless steel steam basket

19 - AVOCADO SAUCE
20 - CITRONETTE
21 - VINAIGRETTE
22 - TAPENADE SAUCE
23 - HOLLANDAISE SAUCE
24 - BERNESE SAUCE
25 - BECHAMEL SAUCE
26 - WHITE BUTTER SAUCE
27 - FOIE GRAS SAUCE WITH ORANGE SMELL
28 - WHITE WINE SAUCE
29 - BARBECUE SAUCE
30 - GUACAMOLE
31 - BALSAMIC VINEGAR REDUCTION
32 - PASTEURIZED ROUX
33 - BASE FOR DUCHESSE POTATOES
34 - POTATO PUREE
35 - SALTY CHANTILLY CREAM WITH PARMESAN CHEESE
36 - SESAME CREAM
37 - SALTY CHANTILLY CREAM WITH CABBAGE
38 - APPLE AND MANGO CHUTNEY
39 - CARROT COULIS WITH CUMIN
40 - SALTY PASTRY CREAM
41 - MIDDLE-EASTERN SALTY CREAM WITH AUBERGINES
42 - SALTY CREAM BRULEE WITH PARMESAN CHEESE

BROTHS, CREAMS AND SOUPS

01 - VEGETABLE BROTH GRANULAR
02 - MEAT BROTH CUBES
03 - VEGETABLE BROTH CUBES
04 - OX CONSOMME
05 - FISH CONSOMME
06 - FOND BRUN
07 - GAZPACHO
08 - CREAMSOUP WITH LEEK
09 - CREAMSOUP WITH CELERY
10 - CREAMSOUP WITH PUMPKIN
11 - CREAMSOUP WITH CAULIFLOWER DU BARRY
12 - POTATO-CREAMSOUP WITH TRUFFLE
13 - CREAMSOUP AGNES SOREL
14 - CHAMPIGNON-CREAMSOUP

38 - PATE GENOISE
39 - PARADISE CAKE DOUGH
40 - CHOUX DOUGH
41 - ALMOND DOUGH
42 - SHORTBREAD
43 - MARGHERITA DOUGH
44 - CAKE DOUGH
45 - BRIOCHE DOUGH
46 - WAFFEL DOUGH
47 - CREPES DOUGH
48 - DOUGH FOR SAVOURY STRUDEL
49 - DOUGH FOR VIENNESE BISCUITS
50 - MACARONS
51 - CRUMBLE
52 - PETIT FOURS DOUGH WITH ALMOND PASTE
53 - CREPES WITH ROQUEFORT
54 - CROISSANT WITH AROMATICS HERBS
55 - SWEET MUFFIN WITH COURGETTES
56 - SAVOURY MUFFIN WITH OLIVES AND ROSEMARY
57 - SAVOURY PLUM-CAKE WITH NUTS AND PARMESAN CHEESE

SAUCES AND CREMES SWEET AND SAVOURY

01 - TRUFFLE BUTTER
02 - MUSTARD BUTTER
03 - ANCHOVY BUTTER
04 - GARLIC BUTTER
05 - SHELLFISH BUTTER
06 - BUTTER FOR SNAILS
07 - AIOLI SAUCE
08 - HUMMUS
09 - AUBERGINE CAVIAR
10 - MAYONNAISE
11 - GREEN MAYONNAISE
12 - MAYONNAISE WITHOUT EGGS
13 - COCKTAIL SAUCE
14 - YOGHURT SAUCE
15 - TARTARE SAUCE
16 - JONVILLE SAUCE
17 - THUNA SAUCE
18 - ANCHOVY SAUCE

MACHINE DEVICES

CONTROL PANEL (7)

Menu: to access to the recipe menu.

+ -: to increase or decrease Speed, Time and Temperature parameters.. When "+" and "-" are used as pulse buttons, the parameters increase or decrease by one digit. If you keep pressing the buttons, the parameters will quickly increase or decrease, just depending on how long the buttons will stay pressed.

Turbo: By keeping the switch pressed, it is possible to go from speed 6 as a minimum to the maximum speed ("Turbo" speed), till the switch is being released.
Pulse: to get a "Pulse" functioning at any speed, from 1 to 10 (with the exception of speeds 1E and 1F).

Time: to set the operating time up to a maximum of 4 hours.

Start/stop: it is the on/off switch for any function.

Temperature: to set the operating temperature:
- COLD SIDE (A): from the temperature detected in the bowl (max 190°C) till - 24° C (-11,20°F);
- HOT SIDE (B): from 25°C (77F°) up to 190° C (374°F).

Speed: To set the operating speed, with 12 different options in the cold side (A) and 13 options in the hot one (B).

HEATING ELEMENT (15) (ONLY HOT SIDE)
Electrical resistance for heating the bowl, allowing cooking.

WARNING: do not heat the bowl when empty!

WARNING: do not touch it, it may cause burns

COOLING CIRCUIT (17) (ONLY COLD SIDE)
Compressor and cooling circuit.

WARNING: do not touch it, it may cause cold burns

PROBE (14)
It is the element that controls the set temperature.

LUIQUID LEAKING HOLE (16)
Should some liquids ever come out of the bowl, they will go out from the appliance base, through this hole.

WARNING: check that the hole is not blocked periodically!

WARNING: the even partial blockage of this hole could cause serious damage in case of liquid leakage out of the bowl.

STABILIZERS FEET (13)
The four dampening feet at the base of the appliance work as shock absorbers and stabilizing elements of any oscillation when the appliance is operating.

LCD DISPLAY (8)
Once the appliance has been switched on, the Hotmix PRO logo will appear on the display. If the lid of the bowl is open, the icon of the lid will switch on and the indication “LID OPEN” will appear. After closing the lid safely, the icon and the written indication will disappear, while the speed icon will appear with “00” digits, together with the indication “SET SPEED”: at this point, the appliance is ready to be programmed. When temperature is being set, in the HOT SIDE (B), the thermometer icon will switch on, together with the indication “SET TEMPERATURE”. In the COLD SIDE (B), instead, the initial temperature of the bowl will be shown and then it’s possible to set the desired temperature, but always and only negative temperatures are settable. When pressing the “CLOCK” switch to set time, the clock icon will switch on with “00:00” digits, and the “SET TIME” indication will appear. The display will show the remaining time slipping by. In case of severe fault, the spanner will switch on while anything else will switch off. The appliance must then be brought to a service center.

MOTOR CONTROL THERMOSTATS
Your appliance is equipped with two thermostats for motor protection: one dynamic and one static. The dynamic thermostat always intervenes before the static, which stops the machine pointing Er: 01.
The dynamic thermostat, in fact, performs an **“intelligent”** control of the motor temperature, stopping it for a moment, if necessary, to cool the motor down

RECIPES - HOT SIDE

DOUGHS

01 - BASIC BATTER FOR FRYING
02 - SOFT BATTER WITH BEER
03 - BATTER FOR TEMPURA
04 - BATTER WITH BRANDY
05 - BATTER FOR FRYING WITH MINT
06 - SPICY BATTER FOR FRYING
07 - YELLOW EGG PASTA
08 - SPECIAL EGG PASTA
09 - GARLIC AND PARSLEY EGG PASTA
10 - CACAO EGG PASTA
11 - SQUID INK EGG PASTA
12 - RED EGG PASTA
13 - EGG PASTA WITH CHESTNUT FLOUR
14 - PIZZA DOUGH
15 - GARLIC AND PARSLEY BREAD
16 - BASILICUM BREAD
17 - CURRY BREAD
18 - BREAD WITH NUTS
19 - BUTTER AND PARMESAN CHEESE BREAD
20 - YELLOW BREAD WITH SESAME SEEDS
21 - BREAD WITH OLIVES AND ROSEMARY
22 - BREAD WITH SMOKED HAM AND PEPPER
23 - SOFT BREAD WITH ANCHOVY
24 - YELLOW BREAD WITH OLIVES
25 - SWEET BREAD WITH MILK
26 - BRIOCHE BREAD WITH SAUGE
27 - LITTLE BREADS WITH COCONUT
28 - AZZIMO BREAD
29 - BREAD-STICKS WITH SHEEP’S CHEESE
30 - PUFF PASTRY
31 - DOUGH TO COVER
32 - BRISEE DOUGH
33 - SHORTCRUST PASTRY
34 - WHIPPED SHORTCRUST PASTRY
35 - BRIK DOUGH
36 - SIGARETTE DOUGH
37 - SABLE DOUGH

84 - CARAMELIZATION OF SUGAR 106°
85 - CARAMELIZATION OF SUGAR 111°
86 - CARAMELIZATION OF SUGAR 115°
87 - CARAMELIZATION OF SUGAR 120°
88 - CARAMELIZATION OF SUGAR 145°
89 - CARAMELIZATION OF SUGAR 158°
90 - CARAMELIZATION OF SUGAR 165°
91 - FRENCH MERINGUE
92 - SWISS MERINGUE
93 - ITALIAN MERINGUE
94 - PARFAI BASE
95 - FONDANT
96 - PATE A BOMBE
97 - PREPARATION FOR FROSTED FRUIT

and finish the recipe, before involving the static thermostat. When the dynamic thermostat is in operation, the word **“PULSE” will be displayed, and you can easily finish the preparation**. If, however, an excessive amount of ingredients or a too thick preparation takes place (which can cause a strain upon the appliance, with consequent overheating of the motor), the static thermostat comes into operation, stopping the motor immediately. The display shows “Er: 01”.
Wait a few minutes before the appliance cools down, and when the motor has reached an acceptable temperature, the machine is automatically ready for use again. To do this you have a forced air cooling fan that also works when the machine is off.

SD CARD (10)

Inside the SD card there are:

Folder **“DEFAULT”**: it contains programs, recipes and specially stored functions;

Folder **“USER”**: it is suited to store personal recipes;

Folder **“CreatorPRO”**: it contains the software to be installed on the PC for storing, modifying and deleting the recipes and instructions to do it;

Folder **“COMBI Recipebook_COLD side”** and **“COMBI Recipebook_HOT side”** with the complete recipe book of stored recipes for cold side and hot side.

ACCESSORIES

LID (2)

• Mount the lid by pressing the two side flaps (4) and exerting a little pressure. It will be very easy.
The lid has a gasket (5), which must always be mounted correctly to avoid the risk of leaking fluids.

WARNING: The incorrect position of the gasket (4) could enable the spill of liquids, or prevent the start of the appliance.

• If the lid is not closed properly, the electromagnetic safety device (3) prevents the appliance to start working, and the display shows the icon of the bowl with an opening lid.

• To open the lid, press with two fingers on the side flaps (5) and lift them up.

WARNING: If there are some liquids in the bowl and the speed is high, wait before opening the lid a few seconds so the liquid will fall to their ordinary level, to avoid over spilling.

CAUTION: Before you start the appliance, please always check that the two side flaps are closed.

CAUTION: Remove the seal periodically and clean the dirt between the seal itself and the cover.

CAUTION: Take care to correctly reassemble the seal at its head, so that the lid closes well.

CAUTION: Never put the lid in the dishwasher!

MEASURING CAP (1)

The cap has a dual function: when fit on the cover it prevents liquid leaking from the lid itself, and can be used as a handy measuring cup as well.

ATTENTION: WHEN THE MACHINE IS IN COOLING PHASE (UNTIL AMBIENT TEMPERATURE) TAKE OFF THE MEASURING CAP, THIS WILL QUICKEN THE OPERATION.

ATTENTION (only COLD SIDE): WHEN THE MACHINE GOES FROM AMBIENT TEMPERATURE TO LOWER OR NEGATIVE TEMPERATURES, PUT ON THE MEASURING CAP, THIS WILL FASTEN THE SPEED OF THE OPERATION.

CAUTION: If boiling and/or hot liquids are present inside the bowl of hot side, please wait a while before removing the cap: it will prevent any puffs of steam.

Equivalence capacity of measuring cap:

Water	g. 85
Extra-virgin oil	g. 85
Seed oil	g. 75
Wine	g. 85
Milk	g. 85
Flour	g. 55
Semolina	g. 70
Sugar	g. 85
Cocoa	g. 50
Rice	g. 85
Breadcrumbs	g. 50
Grated cheese	g. 50

CLEANING: The measuring cap can be washed in the dishwasher.

BOWL (12)

The bowl shows three lines to indicate the content level:

1st line = 1 litre

2nd line = 1,5 litres

3rd line= 2 litres

41 - ONSEN EGG STIFF
42 - POACHED EGG
43 - HARDBOILED EGGS
44 - STEAM COOKING OF EGGS
45 - COOKING MARBLE EGGS
46 - VINEGAR OR WINE COURT-BOUILLON
47 - MILK COURT-BOUILLON
48 - SHELLFISH FUMET
49 - FISH FUMET (COULIS)
50 - BISQUE
51 - BISQUE SAUCE
52 - WHITE ROUX
53 - BROWN ROUX
54 - CLEARED BUTTER
55 - HAZELNUT BUTTER
56 - BASE FOR AROMATISABLE OLIVE OIL
57 - BASE ROYALE FOR CONSOMME
58 - BASE CREAM (SOUPS)
59 - CREAMS WITH EGG BASE
60 - BASE SAVOURY SOUFFLE
61 - BASE SWEET SOUFFLE WITH MILK
62 - ALCOHOLIC SORBET BASE
63 - FRUIT BASE FOR ICE CREAM
64 - WHITE BASE FOR ICE CREAM
65 - YELLOW BASE FOR ICE CREAM
66 - BASE DRY FRUIT PASTE FOR ICE CREAM
67 - BASE FOR FRUIT SAUCE WORKED COLD
68 - BASE FRUIT JELLY
69 - BASE FRUIT MOUSSE
70 - BASE FRUIT COULIS
71 - BASE FRUIT JAM
72 - BASE FRUIT MOUSSE CREAM
73 - BASE FOR CHOCOLATE SAUCES
74 - BASE FOR SWEET BAVARIAN
75 - BASE ENGLISH CREAM OF SWEET FRUIT
76 - BASE ENGLISH CREAM OF ACID FRUIT
77 - BASE FOR PASTRY CREAM WITH SWEET FRUIT
78 - BASE FOR PASTRY CREAM WITH ACID FRUIT
79 - BASE FOR SAUCES ENGLISH CREAM WITH SWEET FRUIT
80 - BASE FOR SAUCES ENGLISH CREAM WITH ACID FRUIT
81 - BASE MOUSSELINE CREAM
82 - BASE SAINT-HONORE CREAM
83 - BASE FOR DISPLOMATIC CREAM

PROGRAMS - HOT SIDE

1 - TO TEMPER WHITE CHOCOLATE
2 - TO TEMPER MILK CHOCOLATE
3 - TO TEMPER PLAIN CHOCOLATE
4 - HIGH PASTEURIZATION
5 - MEDIUM PASTEURIZATION
6 - LOW PASTEURIZATION
7 - SYRUP SUGARS (70 BRIX)
8 - SYRUP PG VEGETABLES (70 BRIX)
9 - CRYSTELLIZED SUGAR (72 BRIX)
10 - INVERTED SUGAR
11 - TO CUT
12 - TO CHOP ROUGHLY
13 - TO CHOP FINELY
14 - TO GRATE
15 - TO PULVERIZE
16 - TO BEAT
17 - TO MIX
18 - TO EMULSIFY
19 - TO WHIP EGG WHITES
20 - TO WHIP CREAM
21 - SOFT DOUGH
22 - MEDIUM DOUGH
23 - STRONG DOUGH
24 - SWEET-SOUR MARINADE
25 - SPICY MARINADE
26 - ORIENTAL MARINADE
27 - TO FRY LUGHTLY
28 - TO STEW
29 - TO TOAST
30 - TO COOK AT LOW TEMPERATURES
31 - TO BOIL MEAT OR FISH
32 - TO BOIL VEGETABLES
33 - STEAM COOKING
34 - CANDYING IN OIL OF VEGETABLES
35 - CANDYING IN SUGAR OF VEGETABLES
36 - REDUCTIONS
37 - REDUCTIONS IN SUGAR
38 - EXTRACTION OF PIGMENTS
39 - PASTEURIZED EGGS
40 - ONSEN TAMAGO EGG

CAUTION: when the contents of the bowl arrives to the 3rd line (2 lt max) the speed 3 is the maximum speed setting. When, on the contrary, the content of the bowl doesn't exceed the 2nd line (1,5 lt) the maximum speed setting is 10.

CAUTION: The maximum capacity must never be exceeded, and it is vital that you take it into account for some foods such as leavened dough and the ice-cream (bread, pizza, etc..) During some preparations volume increases, furthermore the higher speeds tend to increase the liquid level because of the centrifugal force.

BOWL'S EXTRACTION

Ensure that the unit is stopped, then press the buttons to open the lid.

CAUTION: To stop the engine never open the lid. Use only the "START / STOP" switch.

CAUTION: To remove the bowl, please use only the handle.

CAUTION: The bowl may be very hot, do not touch it and do not place it on delicate surfaces as they could even be irreparably damaged.

BOWL'S OPENING AND INSERTION

Make sure that the appliance is stopped, then press the buttons to open the lid. Opening the lid automatically sets operational safety that stops the engine and, consequently, the blades stop turning.
Insert the bowl making sure that sounds perfectly in their seats, otherwise the safety device will prevent the motor starting.

CAUTION: before to insert the bowl check that the blades are securely locked.

CAUTION: Before cleaning the glass, always make sure that the blades are dismantled in order to avoid the risk of cutting.

CLEANING: The bowl can be washed in the dishwasher. Consider, however, that the detergents used in dishwashers are very aggressive and that, after some time, the grip of the bowl's handle could become a little discoloured.

BLADES (20)

ASSEMBLING/DISASSEMBLING THE BLADES:

Hold the blades with one hand, insert them into the hole on the bottom of the bowl with the other hand and carefully tighten the locker on the bottom of the bowl, turning it counter clockwise.
To disassemble the blades, please turn the locker clockwise and make the opposite operation to re-assemble the blades.

WARNING: The blades have sharp surfaces, be careful while handling.

CAUTION: After you have crushed harsh elements (ice, nuts, carrots etc.) ALWAYS tighten the locker

Always check that the blades are equipped with the gasket and that the gasket is in good condition, otherwise it will be possible that liquids come out through the discharge pipe on the basis of the appliance.

SPATULA (19)

The spatula allows to stir the ingredients contained in the bowl even with the blades in motion in total security, because its special shape makes it impossible to get in contact with the blades themselves. It also enables, when necessary, to remove ingredients from the walls of the bowl in one processing step and the next.

WARNING: DO NOT use other tools (spoons or wooden spoons, etc.) with the blades in motion.

CLEANING: The spatula can be washed safely in the dishwasher.

MIXING PADDLE (18)

The mixing paddle help foods and liquids to get properly blended.
To insert the mixing paddle, please match the hole at the bottom of the device with the upper pin linked to the blades, then push down till you hear a “click”.
To remove the mixing paddle, pull it upward to remove it from the blades’ pin.
The time of usage of the mixing paddle is linked to the duration of the food preparation.

WARNING: DO NOT use the mixing paddle at speeds higher than 4 or at speed TURBO.

CAUTION: Always insert the mixing paddle when there are no solid foods in the bowl.

WARNING: DO NOT remove the mixing paddle when the glass is still hot. Wait till the mixing paddle cool down before removing it from the bowl.

CREAMING PADDLE (22)

The creaming paddle has been studied especially for the whipping of ice cream (COLD SIDE A), but it is also suitable to mix creams and risottos (HOT SIDE B).
Assemble and disassemble the creaming paddle following the same procedure used for the assembly and the disassembly of the blades.
The time of use of the paddle depends on the duration of the recipe.

ATTENTION: DO NOT use the creaming paddle at speeds higher than 1F.

03 - PINA COLADA ICE CREAM
04 - SALTY ICE CREAM WITH SALMON
05 - SORBET WITH COINTREAU
06 - SORBET WITH PORT WINE
07 - SORBET WITH STRAWBERRIES AND PROSECCO
08 - CHAMPAGNE SORBET
09 - SORBET WITH WATER MELON
10 - TOMATO SORBET
11 - GRANITA WITH COFFEE
12 - GRANITA WITH LEMON
13 - GRANITA WITH BLACK MULBERRY
14 - GRANITA WITH CHAMPAGNE
15 - GRANITA WITH STRAWBERRIES

DRINKS

01 - CHOCOLATE MILK-SHAKE
02 - APRICOT MILK-SHAKE
03 - ANANAS AND KIWI MILK-SHAKE
04 - ANANAS AND MELON MILK-SHAKE
05 - BANANA AND STRAWBERRY MILK-SHAKE
06 - BANANA AND HONEY MILK-SHAKE
07 - ANANAS AND PAPAYA MILK-SHAKE
08 - PASSION FRUIT MILK-SHAKE
09 - BATIDA DE BANANA
10 - ALEXANDER
11 - BLOODY MARY
12 - FROZEN STRAWBERRY DAIQUIRI
13 - GIN FIZZ
14 - GRANITA DAIQUIRI
15 - MINT MOJITO
16 - PIÑA COLADA

SAUCES FOR PASTA

01 - PESTO ALLA GENOVESE
02 - PESTO WITH ALMONDS
03 - PESTO WITH ROCKET
04 - PESTO WITH ZUCCHINE

STUFFINGS, PATES, SAVOURY CAKES

01 - SALMON STUFFING
02 - STUFFING WITH CHICKEN OR VEAL
03 - STUFFING WITH HAM AND EWE'S CHEESE
04 - STUFFING WITH HAM AND PISTACHIO NUTS
05 - MOUSSE OF EWE'S CHEESE WITH OLIVE PASTE
06 - MOUSSE OF THUNA AND MONTASIO CHEESE
07 - HAM MOUSSE
08 - MOUSSE WITH CAMEMBERT AND HAZELNUTS
09 - MOUSSE WITH HAM AND GORGONZOLA
10 - MOUSSE WITH THUNA AND CAPERS
11 - SMOKED PATE (HERRINGS)
12 - AVOCADO PATE
13 - TARTARE WITH SHRIMPS IN AVOCADO MOUSSE
14 - QUICHE LORRAINE
15 - QUICHE SANS PATE
16 - FALAFEL
17 - POTATO AND PUMPKIN CROQUETTES WITH ALMONDS
18 - SWEET SOUFFLE WITH CHEESE
19 - LITTLE CAKE WITH POTATOES AND CELERIAC

DESSERT

01 - AROMATISABLE WATER ICING
02 - ICING ROYALE
03 - TRADITIONAL TIRAMISU
04 - CHANTILLY CREAM
05 - ICECOLD SOUFFLE
06 - ITALIAN DESSERT
07 - SPECULOOS

GELATI, SORBETS, GRANITA

01 - ICE CREAM WITH RICOTTA AND FRUIT
02 - BASIL ICE CREAM

CLEANING

Clean the appliance with a damp cloth and neutral detergent, avoid cleaners that result in being too aggressive or that make too much foam.

CAUTION: Disconnect the plug from the outlet before starting the cleaning operations.

ATTENTION: Do not immerge the machine in water in order to clean it.

CAUTION: Do not clean the appliance with a jet of water.

Disassemble periodically the gasket and remove the dirt that there might be between gasket and lid.

ATTENTION: do take care to assemble the gasket well again in its compartment, in order for the lid to close well.

ATTENTION: in cooling phase use the bowl perfectly dried and cleaned on the external sides: IT COULD FREEZE AND STICK TO THE WALLS OF THE MACHINE. In this case it will be possible to unblock the bowl by simply moving towards the right/left the handle, without any particular effort.

Clean the inner part of the housing of the bowl with a not abrasive cloth. Effect the operation only and exclusively with machine OFF and cold. Before cleaning the bowl always check that the blades are disassemble, in order not to cut oneself.
Clean the appliance with a damp cloth and neutral detergent, avoid cleaners that result in being too aggressive or that make too much foam.

HOW TO OPERATE

Place the appliance on a flat surface, so that it will be in a stable position.
Connect the equipment to the mains voltage.
Switch on the appliance by pressing the main switch of the desired side, the relative display will then switch on automatically and showing the logo HotmixPRO COMBI COLD or COMBI HOT.

SETTING THE FUNCTIONS

- Select the icon of the function.
- Use the "+" and "-" to set the digits.
- Set the functions necessary to make food preparations, always use this recommended sequence:

1. Temperature
2. Speed
3. Time
4. Start / Stop

WARNING: at the first use, it is possible that the device emit a low noise, due to the internal stabilization of the joints. That is normal, and it will disappear in a short time.

CORRECTION OF DATA SET

When working you can change the parameters of speed, time and temperature and, with the “+” and “-” symbols, define the new digits.

Proceed as follows:

• Press the START / STOP button to stop the appliance

• Press the button corresponding to the parameter that you want to change for the setting

• Press the “+” or “-” to set the new digit

• Press the START / STOP button to restart the unit.

After 3 seconds from the end of the change of the parameter, the display shows the icon that shows what the unit was doing before the change.

The unit will not start without any given set of parameters.

SPEED CONTROL

Selection of the blades’ speed as follows:

• Press the SPEED button

• Use “+” and “-” select the required speed. The speed set will be displayed.

The appliance is equipped with 24 different types of speed:

• Speed from 0 to 10
• Speed from 1 to 10 PULSE
• Speed 1E for cooking meat with paddles
• Speed 1F for cooking delicate foods with paddles
• TURBO

ONLY FOR COLD SIDE:

GELATO-GRANITA which is totally automatic, including the temperature. The speed is “GELATO-GRANITA”

The speed “0” can be displayed and selected: in the COLD SIDE (A) is after the speed “GELATO-GRANITA”, in the HOT SIDE (B) is after the speed 1, and only by setting a temperature first as follows:

38 - CAKE DOUGH
39 - BRIOCHE DOUGH
40 - CREPES DOUGH
41 - DOUGH FOR SAVOURY STRUDEL
42 - DOUGH FOR VIENNESE BISCUITS
43 - MACARONS
44 - CRUMBLE
45 - PETIT FOURS DOUGH WITH ALMOND PASTE
46 - CREPES WITH ROQUEFORT
47 - CROISSANT WITH AROMATICS HERBS
48 - SWEET MUFFIN WITH COURGETTES
49 - SAVOURY MUFFIN WITH OLIVES AND ROSEMARY
50 - SAVOURY PLUM-CAKE WITH NUTS AND PARMESAN CHEESE

SAUCES AND CREMES SWEET AND SAVOURY

01 - TRUFFLE BUTTER
02 - MUSTARD BUTTER
03 - ANCHOVY BUTTER
04 - GARLIC BUTTER
05 - BUTTER FOR SNAILS
06 - AIOLI SAUCE
07 - HUMMUS
08 - MAYONNAISE
09 - GREEN MAYONNAISE
10 - MAYONNAISE WITHOUT EGGS
11 - COCKTAIL SAUCE
12 - YOGHURT SAUCE
13 - TARTARE SAUCE
14 - THUNA SAUCE
15 - AVOCADO SAUCE
16 - CITRONETTE
17 - VINAIGRETTE
18 - TAPENADE SAUCE
19 - GUACAMOLE
20 - BASE FOR DUCHESSE POTATOES
21 - SESAME CREAM

BROTHS, CREAMS AND SOUPS

01 - VEGETABLE BROTH GRANULAR
02 - GAZPACHO

RECIPES - COLD SIDE

DOUGHS

01 - BASIC BATTER FOR FRYING
02 - SOFT BATTER WITH BEER
03 - BATTER FOR TEMPURA
04 - BATTER WITH BRANDY
05 - BATTER FOR FRYING WITH MINT
06 - SPICY BATTER FOR FRYING
07 - YELLOW EGG PASTA
08 - SPECIAL EGG PASTA
09 - GARLIC AND PARSLEY EGG PASTA
10 - CACAO EGG PASTA
11 - SQUID INK EGG PASTA
12 - RED EGG PASTA
13 - EGG PASTA WITH CHESTNUT FLOUR
14 - PIZZA DOUGH
15 - GARLIC AND PARSLEY BREAD
16 - BASILICUM BREAD
17 - CURRY BREAD
18 - BREAD WITH NUTS
19 - BUTTER AND PARMESAN CHEESE BREAD
20 - YELLOW BREAD WITH SESAME SEEDS
21 - BREAD WITH OLIVES AND ROSEMARY
22 - BREAD WITH SMOKED HAM AND PEPPER
23 - SOFT BREAD WITH ANCHOVY
24 - YELLOW BREAD WITH OLIVES
25 - SWEET BREAD WITH MILK
26 - LITTLE BREADS WITH COCONUT
27 - AZZIMO BREAD
28 - BREAD-STICKS WITH SHEEP'S CHEESE
29 - PUFF PASTRY
30 - DOUGH TO COVER
31 - BRISEE DOUGH
32 - SHORTCRUST PASTRY
33 - WHIPPED SHORTCRUST PASTRY
34 - BRIK DOUGH
35 - SIGARETTE DOUGH
36 - SABLE DOUGH
37 - SHORTBREAD

• Press the button with the icon of the thermometer
• Select a temperature
• Use the "-" switch to select the speed "0"
• Set the other parameters and proceed.

TIME

Selection of time duration:
• Press TIME.
• Use "+" and "-" to select the working time. The value of time set will be displayed.
• The range of time varies from 5 seconds to 4 hours.
• After 60 minutes, and up to 4 hours, the steps will be 10 minutes at a time, unless you use the "+" and "-" with small shots: in this case we can proceed from minute to minute.
Steps of the clock:
<1min 1-5min. 5-10min. 10-30min. 30 - 60min. > 60min.fino to 4 hours
Every 5 sec. Every 15 sec. Every 30 sec. Every 1 min. Every 5 min. Every 10 min. Every 10 min. with option of min. in min.
The display shows the remaining time of food preparation.
The unit stops automatically when it reaches the selected time and emits a beep.

If the unit is stopped when the scheduled time is has not been completed, the flashing icon appears on the display to indicate that the appliance has a not yet completed a default working time.

TEMPERATURE

Temperature selection:

HOT SIDE (B)

• Press the TEMPERATURE button
• Use "+" and "-" to select the required temperature. The display will show the set temperature.
• If you do not set any temperature because the machine has to work at room temperature, the display will show two horizontal lines to indicate that no heating nor cooling has been selected.

COLD SIDE (A)

• Press the TEMPERATURE button.
• Use "+" and "-" to select the required temperature. The display will show the set temperature.
• Right afterward, the appliance will start to detect the temperature of the bowl, showing on the display the progressive temperature.
• The cold icon that starts flashing on the right of the display means that the appliance has started to cool down.

The temperature range varies:

- COLD SIDE (A): from the temperature detected in the bowl (max 190°C) till - 24° C (-11,20°F);
- HOT SIDE (B): from 25°C (77F°) up to 190° C (374°F).

HOT SIDE: First make all those preparations that don't require a temperature. Then, make the preparation that requires positive temperatures: you will save energy and time.

COLD SIDE

If, for any reason, during the cooling phase the appliance has been stopped for more than 2 minutes, the compressor will automatically stops, turning on again only after 3 minutes.

In order to avoid damages to the transmission, at speeds 1, 1E and 1F, when the temperature of the bowl reaches minus 8 degrees (-8°C) and you are whipping ice cream, the program will switch off the motor but will continue to cool down.

EXAMPLES OF WORK

NORMAL WORK:
• After introducing the ingredients into the bowl, close the lid properly.
• Press the SPEED button, then use the buttons "+" and" "-" to select the required speed.
• Press the TIME, then use the buttons ""+" and "-" to select the required time.
• Press the temperature (if necessary), then with the "+" and "-" buttons please select the required temperature.
• Finally, press the Start / Stop button (to operate the appliance).

PULSE WORK (work stopped):
When the unit is operating with regularly:
• Press the PULSE button - so the working speed will switch to PULSE (discontinued). The appearance of the appropriate icon on the display will indicate that the PULSE function is on.

TURBO WORK:
When the unit is operating regularly:
• Press the button to activate the TURBO function. The TURBO function is kept on until the button is held.
The TURBO function is selectable from speed 6 to speed 10.
The display indicates the function with the flashing icon TURBO SPEED.

PROGRAMS - COLD SIDE

1 - TO CUT
2 - TO CHOP ROUGHLY
3 - TO CHOP FINELY
4 - TO GRATE
5 - TO PULVERIZE
6 - TO BEAT
7 - TO MIX
8 - TO EMULSIFY
9 - TO WHIP EGG WHITES
10 - TO WHIP CREAM
11 - SOFT DOUGH
12 - MEDIUM DOUGH
13 - STRONG DOUGH
14 - COLD PATE
15 - STUFFINGS
16 - MOUSSELINE STUFFING
17 - SWEET-SOUR MARINADE
18 - SPICY MARINADE
19 - ORIENTAL MARINADE
20 - BASE ROYALE FOR CONSOMME
21 - ALCOHOLIC SORBET BASE
22 - BASE FRUIT MOUSSE CREAM
23 - FRENCH MERINGUE
24 - PARFAI BASE
25 - PREPARATION FOR FROSTED FRUIT

INDEX PROGRAMS AND RECIPES

Programs - COLD side ..... *page* 31

Recipes - COLD side ..... *page* 32

Programs - HOT side ..... *page* 36

Recipes - HOT side ..... *page* 39

NEGATIVE TEMPERATURES (COLD SIDE A):
To whip ice creams / prepare granita, use only the specific “GELATO-GRANITA” speed.

MENU
a. RECIPE GUIDE
b. RECIPE MANAGEMENT (modifying, deleting, memorizing)

In order to access the RECIPE GUIDE, please insert the SD card in the appropriate compartment, placed on the back side of the appliance (10).
a. Keeping the MENU switch pressed, the pre-stored recipes/programs will be accessed.
b. Keeping the MENU switch pressed for at least 3 seconds, the following functions can be accessed: **modifying, deleting, storing** of one’s own recipes (only for setting functions).

The programs and the pre-stored recipes have been created by our chefs according to their personal taste, using ingredients available in our country. It is possible that different ingredients and a different personal taste will sort out a different outcome from what expected. To this purpose, the appliance offers the opportunity to modify the stored recipes and/or programs, by saving a copy in one’s own file (User), or to store own recipes, according to the personal taste and the ingredients available in one’s own country.

a. Keep the MENU button pressed and, by using the + and – buttons, select the file you want to access to: **DEFAULT** (pre-stored recipes and programs) or **USER** (personal recipes). Confirm by pressing the Start button.

Regardless of the selected file, please proceed as follows to create a pre-stored recipe/program:

• By using the “+” and “-“ buttons, select the number of the chosen program. For seeing the complete list, please go to: www.hotmixpro.com , at the “RECIPES AND SPECIAL PROGRAMS” section. The consultation of this section will enable you:
a) to print the full text of recipes, including any final stages of processing;
b) to always find the updated list, in real time, of any recipe and program available and possibly their updated version, which will be possible to download on your SD card.
• Then press the START/STOP button: the number of the program/recipe will appear on top, with the title flowing “INGREDIENT_ OF _” (where 000 is the first ingredient, and the number after the bar show the total quantity of ingredients of a specific recipe), and the name and the quantity of the first ingredient. Within some programs, neither the ingredients not the quantities are being specified.

• By using the “+” button, all the ingredients needed for a recipe can be displayed one by one.

• At the end, press again the START/STOP switch to show the first ingredient of the first step to be introduced into the bowl. The display shows the total number of the steps for each recipe as well (e.g. 1/3).

• Once the ingredients of the first step have been introduced into the bowl, press START and the machine will operate.

• At the end, follow the same procedure with the second step, till the recipe will be completed.

The display shows the remaining time, speed, temperature and the accessory used.

• At any stage of each operations, the icons will appear on the display, thus indicating which function is working, like when the machine is being operated manually.

At the end of the last operating step. The machine will emit a continuous “beep”, like at the end of any manual preparation.

When a stored recipe is being created, it is fundamental that the ingredients are being introduced exactly in the same order as per the indications given on the display or the recipe guide.

ATTENTION: Never let the machine unattended while working.

b. Press the MENU button for at least 3 seconds. By using the “+” and “-” buttons, select the file as follows: **DEFAULT** (pre-stored recipes and programs) or **USER** (personal recipes). Confirm by pressing the Start button.

This menu includes the following activities:
Storage of a recipe
Modification of a pre-stored recipe
Delete of a pre-stored recipe

STORAGE OF A RECIPE

There are two ways to store one’s own recipe:

A. Directly from the machine, into the USER folder, it is possible to store number and name of a recipe, number of the steps required to complete it, and the operating parameters (speed, time and temperature). It is not possible to write the ingredients and the quantities, if you wish to include these info please proceed to point B.

B. From the PC, after inserting the SD card into the appropriate card reader, through the program into the CreatorPRO folder, it is possible to store number and name of the recipe, number of the steps required to complete it, and the

FUNCTION	INGREDIENT	TOOL	SPEED	SPEED	SPEED	QUANTITY
TO CHOP	Parsley, basil, aromatic herbs	Blades	6	from 5 to 15 s.according to the recipe	/	half a bowl
	Carrot, onion, celery		from 4 to 6	from 10 to 30 s. according to the recipe		min 50 g / max 500 g
	Mixed vegetables		3	from 5 to 10 s. according to the recipe		max 400 g
	Meat		8	according to the quantity		max 120 g
	Ice cubes		6	from 5 to 20 s. according to the recipe		min 120 g / max 750 g
TO GRATE	Cheese	Blades	from 8 to 10	1 minute	/	max 350 g
	Bread		from 8 to 10	30 seconds		max 300 g
TO PULVERIZE	Legumes and cereals	Blades	10	from 2 to 3 min. according to the quantity	/	max 250 g
	Sugar		10	20 seconds		max 320 g
	Dried fruit		10	3 minutes		max 400 g
TO WHIP	Egg white	Blades + mixing paddle	3	from 2 to 3 min. according to the quantity	/	max 6 egg whites
	Cream		3	from 2 to 2 min.and 50 s. according to the quantity		max 600 g
TO KNEAD	Home made pasta	Blades	Dough program or speed 10 PULSE		/	flour max 500 g
	Bread or pizza dough					
	Puff -pastry					
	Short - pastry					
	Tart - pastry					
TO HOMOGENIZE	Milk - shake	Blades	from 5 to 8	15 seconds	/	500 g
	Meat and fish		from 6 to 10	15 seconds		120 g
TO CHOP	Ice cream cubes	Blades	7 + 4	from 1 to 6 min.	/	
TO EMULSIFY	Mayonnaise	Blades	4	1 minute	/	700 g
	Milk - shake		7	from 10 to 20 sec. according to the quantity		1 l
TO FRY LIGHTLY	Chopping	Blades	from 3 to 5	from 3 to 5 min. according to the quantity	95°- 100°C (203°-212°F)	250 g
	Mixing		1	5 min.	95°- 100°C (203°-212°F)	350 g
TO COOK	Chopping	according to the recipe	from 3 to 5	according to the recipe	95°- 100°C (203°-212°F)	1,5 l
	Mixing		1 - 1E - 1F	according to the recipe	95°- 100°C (203°-212°F)	
	With the basket		from 1 to 4	according to the recipe	100° C (212°F)	
TO STEAM COOK	Vegetables	Basket	0	from 10 to 30 min. according to the recipe	100°C (212°F)	500 g
	Meat					
	Fish					

NOTE : it is possible to pre-cool the bowl of the cold side (A) to emulsify, whip, cream, cut etc. with incredible results. The chill has the function to “stabilize”, ensuring unexpected results. The only limit is the chef’s imagination!

RECYCLING AND WASTE DISPOSAL

When the device stops working and must be scrapped, you must ensure that its disposal will cause the least environmental damage possible, in accordance with the following European legislation 2002/96/EC:

1 - When a product is given the symbol of a garbage crossed out, it means that the product is covered by the European Directive 2002/96/CE.

2 - All electrical and electronic products should be disposed separately from the municipal waste collection, and being collected within specific plants designated by the government or local authorities.

3 - The proper disposal of obsolete equipment helps to prevent possible negative consequences on human health and the environment.

4 - For more detailed information on the disposal of obsolete equipment, please contact the municipality, the waste disposal service or the shop where you purchased the product.

operating parameters (SPEED, TIME and TEMPERATURE), besides writing ingredients and related quantities.

A. To store a recipe directly from the machine:

• Keep the MENU button pressed for at least 3 seconds.

• Use the "**+**" e "**-**" buttons to let the Menu words flowing till selecting "STORE", and press the "START" button.

• It is necessary to select the number of the recipe to be stored, by letting the numbers flowing with the "+" and "-" buttons. Confirm the selected number with the START button: in case the selected number is already assigned, the indication "ATTENTION RECIPE EXISTING" will appear, and it will fade away after 3 seconds; a "beep" will be then heard, and the display will go back to the previous screen, in order to enable the selection of another number. In case the selected number will be available, please confirm with the START switch, then go ahead to the subsequent line.

• The storage of a recipe should be made by dividing it into steps, starting from 1 upwards, using the "+" and "-" buttons. Then confirm with the START button, and then go ahead to the subsequent screen of setting modes.

• If when storing each step an already assigned number will be chosen, a "beep" will be heard after 3 seconds and the display will go back automatically to the previous screen, to enable the insertion of the correct number.

• Once on the screen of the setting modes, select the SPEED digit with the "+" and "-" buttons, and the PULSE switch as well if required, then press START to confirm.

• Now we go to the TIME setting mode. Please select the digits with the "+" and "-" buttons, confirm with the START button, and then go to the next setting mode.

• So we get to the TEMPERATURE setting: please select the digit with the "+" and "-" buttons, confirm with the START button, and the go to the next setting mode, that is the selection of the accessory to be used.

• Selection of the ACCESSORY: please go the requested accessory by the "+" and "–" buttons, then confirm with the START/STOP button.

• All the set data are to be confirmed (or not) with the subsequent screen by using the "+" and "-" buttons, to get positioned over YES, or NO and then pressing the START/STOP button. If the data are confirmed, then the subsequent screen will appear, otherwise it will go back to the initial screen. In both cases the name of the accessory will flow on the display.

• On the next screen the indication "OPERATION COMPLETED" will appear. It will mean that all the necessary operations have been set. The indication will stay on for about 3 seconds, then a "beep" will announce the change to the next screen.

• In case a recipe needs to be prepared through various steps, press the START button to get back to the screen where the number of the step to be stored will be selected. Conversely, if the recipe has been completed, please select the indication END by using the “+” and “-” buttons, and then press START.

• To get out from the STORE RECIPE menu and go back to the initial screen RECIPE MANAGEMENT, press START if the storage procedure has been completed, or MENU if you decide to exit earlier, therefore deleting the storage procedure.

MODIFICATION OF A PRE-STORED RECIPE

To modify a pre-stored recipe:

• Press the MENU button for at least 3 seconds.

• By using the “+” and “-” buttons, let the menu words flowing, till selecting “CHANGE”, and press the START button.

• Choose the number of the recipe to be modified, by using the “+” and “-” buttons, then once selected press START to confirm, and pass on to the line below.

• Selection of the step to be modified: by using the “+” and “-” buttons, once the step has been selected please press START to confirm, and then pass on to the setting mode screen.

• To set the new operating speed: select the digit with the “+” and “-” buttons, and possibly the PULSE function (by pressing the PULSE button). Once the word SPEED has been selected, choose the new digit with the “+” and “-” buttons, then confirm by pressing the START button, and pass on to the subsequent screen.

• To set the new operating time: select the digit with the “+” and “-” switches. Once selected the word TIME, choose the new digit with the “+” and “-” switches and confirm by pressing the START switch, then pass on to the subsequent screen.

• To set the new operating temperature: choose the digit with the “+” and “-” buttons. Once selected the new the word TEMPERATURE, choose the new digit with the “+” and “-” buttons, and confirm by pressing the START button, then pass on to the next screen.

• To set a new accessory, position on the word referred to the accessory to be selected with the “+” and “-” buttons, and confirm by pressing the START button.

• To confirm the new set data, select YES with the “+” and “-” buttons, and confirm by pressing the START button, then pass on to the next screen.

• Before carrying out any recipe, please read all the ingredients to prepare it properly and have them at hand, and strictly follow the sequence of implementation.

• When a recipe calls for ingredients that are a “cube” or “diced”, it is necessary to prepare them this way, otherwise they do not mix well with other ingredients in the recipe. The cubes should have the side of about 1 - 1.5 cm, while the diced should have the side smaller than 1 cm.

• In all preparations of fruit (juices, sherbets, jams, etc..) add a peeled lemon “in vivo”, ie without white skins, seeded and cut into small pieces. The lemon will act as an antioxidant and will enhance the colour and flavour of the preparation.

• For the preparation of ice creams and sorbets, to whip cream and to make flesh or fish stuffings, it is necessary that the machine is cold, that the bowl gets cooled first and that the specific programs and speeds are chosen.

• To prevent the internal shell from freezing (cold side), eventually blocking the bowl, always keep both of them clean with a bit of alcohol.

• To prepare ice cream, please use only the specific “GELATO - GRANITA” speed (cold side only).

• To pasteurize, please use only the specific “PASTEURIZATION” program.

• In preparations that require long cooking times, you may need to add extra liquids. Similarly, for preparations that require the use of eg. tomato sauce, please remind that not all soups are the same, but they can vary in consistency and, therefore, in the amount of liquid they contain.

• For the preparation of dishes with vegetables, if you are not satisfied with the amount of cooking achieved by the recipe, you can use the “personal touch” and prolong the cooking for the desired time. If you use canned beans instead of dry ones, consider that cooking times should be reduced considerably.

• For the preparation of meat dishes, one should consider the importance of the type of meat and the cut used. Cooking times of the recipes refer exclusively to the type and cut of meat indicated in the recipes themselves. If for any reason, you decide to use a different type of meat, remember that it will change its cooking times. Obviously, if you must lengthen the cooking time, you must increase the amount of liquid in the bowl while cooking.

• When you program the delayed start of a recipe with rice and liquids (broth, water, milk, etc.), you must keep in mind that over time the rice absorbs the liquid and therefore the cooking time should be reduced.

• After cooking, wait a moment before opening the lid and take care of possible “puffs” of steam. You could burn yourself.

• If the unit is used improperly, eg. by putting bigger amounts of an ingredient than those provided by the recipe, or more than the appliance can accept, the motor tends to overheat and thus, in order to protect it, the intervention of a thermal protection will block the motor until it will cool down. Once cold, the unit will work again.

• Do not lift or move the unit by grasping the handle.

When making this operation, if you realize that you have set wrong data, please press the recipe icon for 5 seconds, then you hear 4 beeps, and all data settings will be deleted with the exception of the current time.

FOOD REHEATING (ONLY HOT SIDE B)
For this function, there is the program P00 in the recipe memory.
After pressing the START / STOP button, you'll need to set the temperature (ranging from 25° to 65 °) with the "+" and "-" buttons, then once the selected temperature is confirmed by pressing "Start / Stop" button.
You should then confirm the time (0 - 4 hours), then after pressing "start / stop", the robot will start reheating the food at speed 0 at the set temperature and time.

HOW TO USE THE PRODUCT PROPERLY

• To chop, grate, pulverize and mount, the bowl should be perfectly clean and dry.
• To chop, grate, pulverize and mix, the volume of ingredients should never exceed half of the bowl.
• When you need to chop, you should remind that speed is proportional to the hardness of the ingredients, while time is proportional to the quantity of the ingredients by chopping.
• When you are chopping small amounts of food (cloves of garlic, a sprig of parsley, etc..) you should program speed and introduce the ingredients all of a sudden through the hole in the lid.
• When you wash the blades, dry them very well and, if necessary, mount the unit to work for a few seconds at maximum speed, so that drops of water will step down the inside of the bowl.
• If you must chop harsh ingredients such as almonds, hazelnuts, chocolate, etc.., set the required speed and the machine, second after second, will increase its speed automatically.
• After chopping very hard ingredients such as ice, nuts, chocolate, etc.., ALWAYS check that blades are still screwed perfectly.
• When cooking, never exceed the litre and half of ingredients (including liquids and solids) otherwise you run the risk that the contents of the bowl could overspill.
• While the unit is in operation, only use the supplied spatula to loosen the ingredients from the sides of the bowl or mix them.
• To make preparations with boiling milk, always remove the cap from the cover while cooking. After cooking, do not open the lid immediately, but let the blades turning without any temperature set, until the milk has gone off the boil before opening.
• Do not place the unit near heat sources (stove, oven, etc..).
• When you want to move the equipment you need to lift it, and never drag it while working: you may run the risk of damaging the functionality of the machine.

• Conversely, if you do not want to confirm the new set data, select NO with the "+" and "-" buttons, and confirm by pressing the START button to go back to the screen that enables to repeat any operation required to change the parameters.

DELETE OF A PRE-STORED RECIPE

To delete a pre-stored recipe, please proceed as follows:
• Enter the RECIPE MANAGEMENT menu by keeping the MENU button pressed for 3 seconds.
• Use the "+" and "-" buttons to let the menu words flow, then position on DELETE and confirm by pressing the START button.
• Select the number of the recipe to be deleted by using the "+" and "-" buttons, then press START to confirm and pass on to the line below.
• Position on YES with the "+" and "-" buttons and confirm by pressing the START button.
• The display will show the indication SURE DELETE, then get positioned on YES with the "+" and "-" buttons and give confirmation by pressing the START button. Then the subsequent screen OPERATION COMPLETED will appear.
• Conversely, by selecting NO the program will be exited.

B. To store a recipe through the PC, writing even ingredients and quantities, or to modify or delete a recipe from the SD card through the PC, download from the SD card the software located in the folder "CreatorPRO" and install it following the instructions.

SPECIAL FUNCTIONS

"WAIT TEMPERATURE" FUNCTION

This function, **particularly useful for pastry preparations**, allows the machine to reach a temperature that has been selected by the user, even a negative one. Once this temperature has been reached, the recipe is completed (e.g. Custard), but the WAIT TEMPERATURE function allows to keep mixing the completed preparation, requiring that a TIME setting (below 04:00 hours) is set into the machine.
When one wants to use the preparation, the machine must be stopped MANUALLY, by pressing the START/STOP button.

PERSONAL TOUCH:
To facilitate the perfect success of the stored recipes, you can repeat the last sequence of processing as follows:
• Press the "clock"
• You will hear a beep
• Set a time of your choice
• Press the "Start"

In this way the unit will repeat the last sequence with the same speed and the same temperature, for the time you set. It is very useful, for example, to give a final touch to food preparations that are not to your liking, without the need to reset all the digits again.

DELAYED DEPARTURE

There are 3 ways to operate the machine with the late departure.

MANUAL PROGRAMMING

When the machine is turned on, to set the current time, press and hold the button “clock” for 5 seconds till you will hear 3 beeps. Now the display shows “- -: - -” with the first two lines that are flashing, they indicate the hour, with the “+” and “-” buttons you could just set the time format 0-24.

Once you have chosen the time, you have to store your data by pressing the “start / stop” button: after flashing, the second two lines are to indicate the minutes: with the same procedure you store the minutes.

Then, you must set the time you want the appliance get started, and with the same system you set the hour .

Once you confirm the information with the START / STOP button, the display will show the clock icon, which means that we must set (again with the “+” and “-” buttons) the time we want the machine starts working; it must be confirmed by pressing “start / stop” as well.

Next, the display shows the icon of the thermometer, if you want to set a temperature, always with the “+” and “-” buttons, and pressing the “start / stop” button to confirm. If you do not want any temperature, press the “start stop” button and skip this step.

Now the blades’ icon appears on the display, and as above, adjust the speed with the “+” and “-” buttons, and store the data. If you want a speed pulse, press the “pulse” button before storing the data.

Once you set the last digit of speed, you will hear 4 beeps, the machine is put on standby, the display shows the current time and the clock icon is flashing.

In this condition the machine waits for the set time to perform the set functions.

Speeds will be set only up to 3, the temperature will be up to 95 ° and the time up to 4 hours.

COMPLETE A RECIPE IN MEMORY:

Once selected a recipe that you want to perform with the delayed start, press and hold for 5 seconds the “clock” button and you will then hear 3 beeps.

Now the display shows “- -: - -” with the first two lines that are flashing, they indicate the hour, with the “” and “-” you could just set the time format 0-24.

Once you have chosen the time, you have to store your data by pressing the button “start / stop”: after flashing the second two lines indicate the minutes to the same procedure time you store the minutes.

Then, you must set the time when you want the appliance will get started, with the same system with which he had set the hour earlier.

Once you set the last value, you will hear 4 beeps, the machine is put on standby, the display shows the current time and the clock icon is flashing.

In this condition the machine waits for the set time to perform the set function.

In this case, the first step of the recipe selection starts, then once finished the machine stops and waits for the start for the next step.

CAUTION: Always check that the ingredients are introduced in the recommended amount from the display.

WARNING: Failure to maintain the quantity of food could cause serious damage to things and people.

CAUTION: Never leave your appliance unattended during the operations.

SINGLE STEP OF A RECIPE

When you pick a recipe of which you want to make a single step with the delayed start, first you need to do the above steps in the ordinary way, then once the last step is over, and before you give the start to the next step, press and hold for 5 seconds the “clock” button and you will hear 3 beeps.

Now the display shows “- -: - -” with the first two lines that are flashing, they indicate the hour, with the “+” and “-” you could just set the time format 0-24 .

Once you have chosen the time, you have to store your data by pressing the button “start / stop”: after flashing the second two lines indicate the minutes: with the same procedure for storing the hours, you now store the minutes.

Then, you must set the time at which you want the appliance getting started, with the same system by which you had set the hour earlier.

In this case, the step being part of the chosen recipe starts. At the end of it, the machine stops and waits for the start of the next step, or it beeps while the recipe has been completed.

WARNING: Always check that the ingredients are being introduced in the recommended amount as per the display indication.

WARNING: Failure to maintain the quantity of food could cause serious damage to things and people.

CAUTION: Never leave your appliance unattended during the operations.

It is possible to check if set data are correct when the machine is in standby, with the clock flashing, by pressing the start / stop button: set digits appear in sequence with the appropriate icon.