SANTOS®

Coffee grinder # 1

For hotels, bars, restaurants, institutions, cafeterias, coffee shops, coffee roasters...

- **Motor:** Thermal protection
  Single phase 220-240 V - 50/60 Hz - 600 W
  100-120 V - 50/60 Hz - 650 W
  1500 RPM (50 Hz)
  1800 RPM (60 Hz)
- Construction: stainless steel and sanitary, cast aluminium.
- Weight: Net : 15 kg (33 lbs)
  Shipping : 16 kg (35 lbs)
- Dimensions:

		Packed (box)
Height:	550 mm (22")	400 mm (16")
Width :	250 mm (10")	300 mm (12")
Depth :	320 mm (13")	580 mm (23")
Shipping cube:	0,07 m³	2,5 Cubic feet

- Wide range of precision grinding selection from coarse (filter) to very fine (expresso). Easy to adjust.
- **Ø 63,5 mm special tempered steel grinding discs (burrs),** long lasting, easy to change.
- Average output: 14 kg/hour (31 lbs/hour).
- Hopper capacity: 1 kg (2,2 lbs).
- Normally provided with a special plastic container (drawer). Capacity: 800 g (1,8 lbs).
- **Model with bag holder on request.**
- Color: Brown.

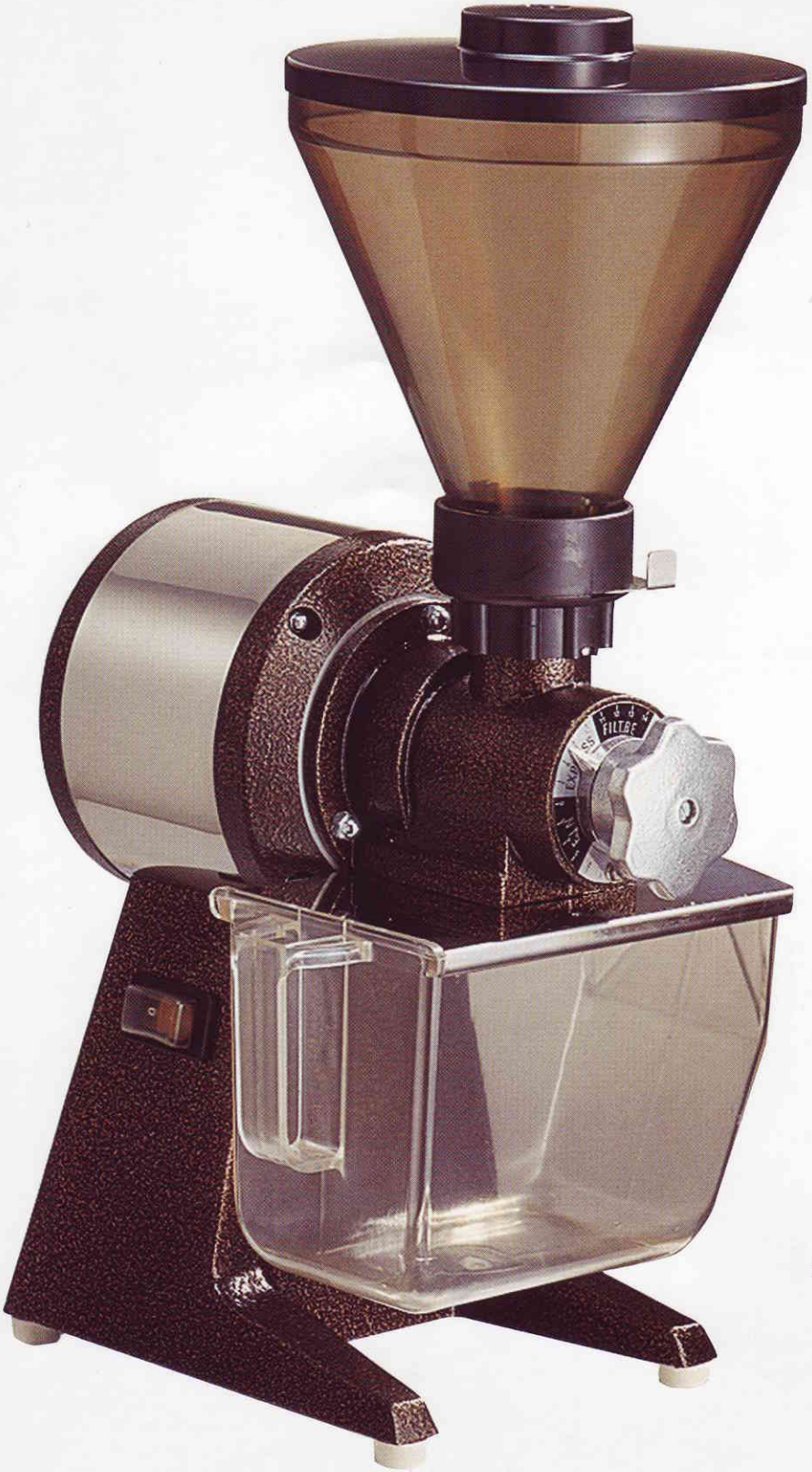

1

SANTOS - 140 - 150, avenue Roger Salengro - 69120 VAULX-EN-VELIN (Lyon) FRANCE - Tél. 33 (0) 472 37 35 29 - Fax 33 (0) 478 26 58 21
E-Mail : santos@santos.fr ▪ Internet : www.santos.fr

Coffee grinder # 1

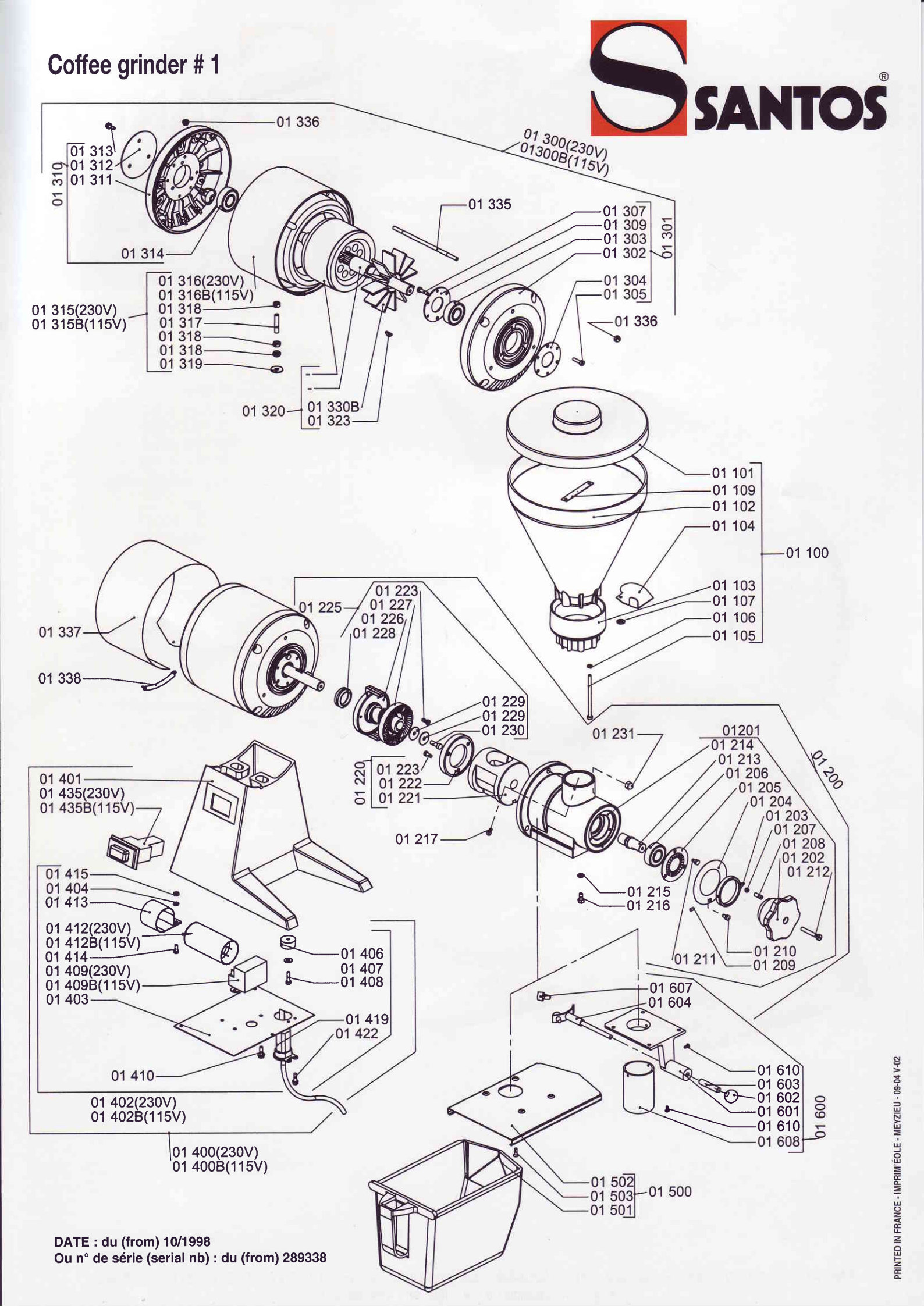

DATE : du (from) 10/1998
Ou n° de série (serial nb) : du (from) 289338

PRINTED IN FRANCE - IMPRIM'ÉOLE - MEYZIEU - 09-04 V-02