Waterless Pot Steamer

The B+S Black series Pot Steamer has been designed to meet the vigorous demands of Asian fast food kitchens and restaurants.

This unit is heavily constructed on an inner stainless steel frame that prolongs your appliance's life. Knowing how demanding the yum cha trade is, B+S has designed a steamer, which can handle the demanding trading period.

Driven by a powerful 170 Mj, 32-jet burner, this unit has a ceramic lined heating chamber. This ensures maximum heat is retained within the chamber required to heat the heavy-duty water pot.

MODEL	LENGTH (mm)	DEPTH (mm)	HEIGHT (mm)	GAS CONSUMPTION (Mj/h) NG	LPG
YCJSF-1	750	900	1300	170	98

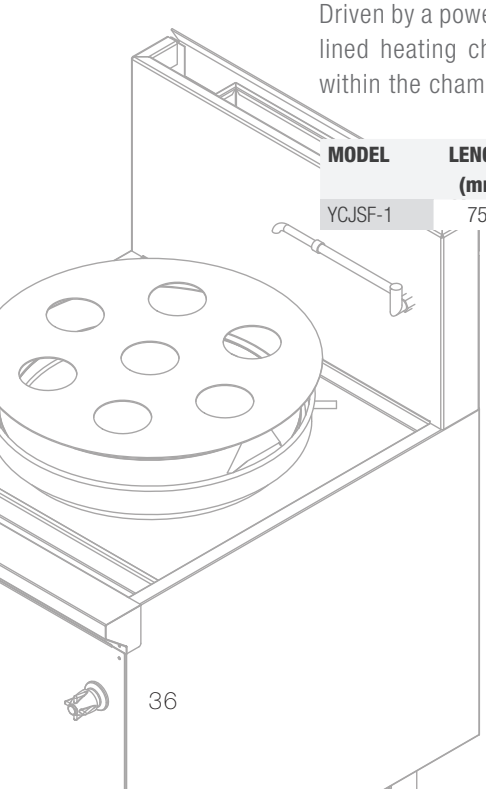

APPROVED

CERTIFIED

AUSTRALIAN MADE

WARRANTY

- AISI 304 grade stainless steel
- Stainless steel water pot has a 64-litre water capacity, which has a built-in water over flow
- Swivel laundry arm which feeds into the water pot ensuring continuous water flow
- No water deck cooling required
- Water retaining lip allows for water conservation
- Front mounted controls for laundry arm
- Piezo ignition and flame failure as standard
- Pressed 1.5mm thick stainless steel top ensures longevity of unit and eliminates chance of water leak to underside of unit