B+S BLACK SERIES: YCJSF-1

Single Hole Waterless Pot Steamer

Project: _____ Item: _____

YCJSF-1

Standard Features & Benefits:

- AISI 304 grade stainless steel
- 64 litres stainless steel water pot
- Powerful 170 Mj, 32 jet burner
- Built-in water over flow
- Swivel laundry arm which feeds into the water pot ensuring continuous water flow
- No water deck cooling required
- Water retaining lip allows for water conservation
- Front mounted controls for laundry arm
- Piezo ignition and flame failure as standard
- Pressed 1.5mm thick stainless steel top ensures longevity of unit and eliminates chance of water leak to underside of unit
- 18 month warranty

Options:

- Natural or LP Gas

Specifications:

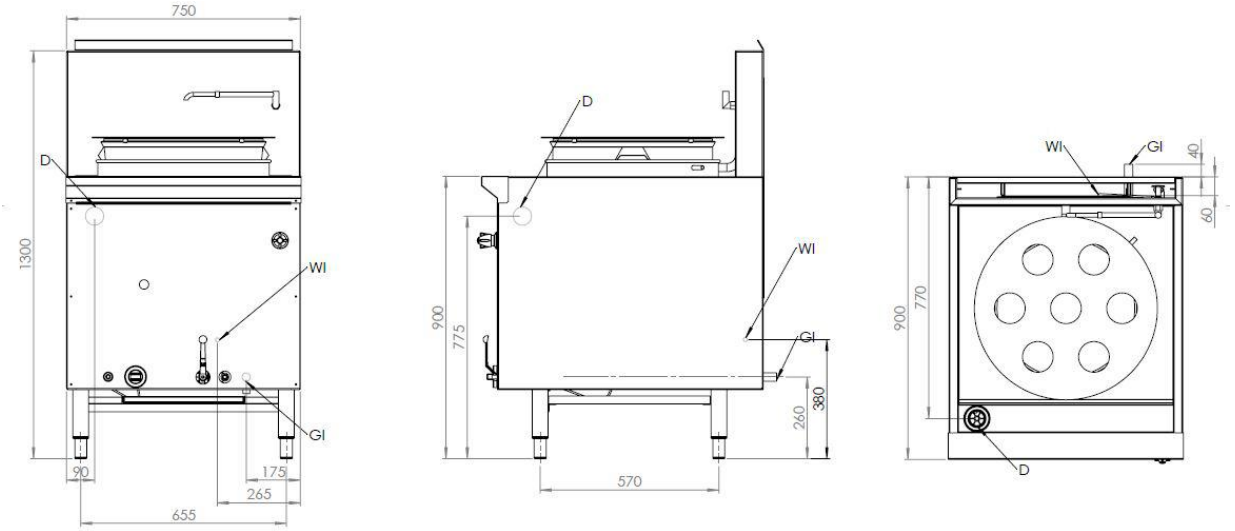

MODEL	LENGTH (mm)	DEPTH (mm)	HEIGHT (mm)	GAS CONSUMPTION (Mj/h)	
				NG	LPG
YCJSF-1	750	900	1300	170	98

Connections:

- Gas (GI) : ¾" BSP
- Water (WI) : ½" Copper
- Waste (D) : 2" BSP
- Supply Pressure:
  - NG : 1.0 kPa
  - LPG : 2.6 kPa
- Regulator is included in the unit
- Must be installed by an authorised installer

B+S Commercial Kitchens
57 Plateau Road Reservoir VIC 3073 Australia | +61 3 9469 4754
info@bscommercialkitchens.com | www.bscommercialkitchens.com