INSTALLATION, OPERATING AND SERVICING INSTRUCTION MANUAL

Commercial Yum Cha Steamer

Model No's.: YCJSF-1,-2,-3

Approval No.; GMK10338

Manufactured By;
B&S Commercial Kitchens Pty Ltd
57 Plateau Road Reservoir VIC 3073 AUSTRALIA
Tel: +61 3 9469 4754 **Fax:** +61 3 94694504 **Web:** www.bscommercialkitchens.com

Please ensure this booklet is kept in a safe and prominent location for future reference.

The reproduction on or copying of any part of this booklet via any means is strictly forbidden unless agreed to in writing by the manufacturer.
Owing to continual product development and improvements to its products, B&S Commercial Kitchens Pty Ltd reserves the right to change the product specifications and design without prior notice.

Table of Contents

INSTALLATION, OPERATING AND SERVICING INSTRUCTION MANUAL 1

Commercial Yum Cha Steamer 1

Product Specifications & Introduction 4

IMPORTANT WARNINGS 5

Table 1: Nominal Terminal Input Rates & Injector Sizes 5

Table 2: Standard Model General Information 5

Figure 1: Plumbing Connections 6

Table 3: Plumbing Connections 6

Installation Instructions 6

Regulations 6

Data Label 6

Ventilation 6

Combustible Surfaces 6

Gas Connection 7

Pressure Test Point 7

Water Connection 7

Before Leaving - Commissioning 7

Operating Instructions 8

IMPORTANT WARNING! 8

IMPORTANT WARNING! 8

Figure 2: YCJSF Series Yum Cha Steamer - Knowing Your Appliance 9

Lighting Instructions 9

Shutdown Procedure 9

Telescopic Laundry Arm - Manual Control 9

Deck Cooling - Manual Control 10

Operating Procedure - Yum Cha Steamer 10

IMPORTANT WARNING! 10

Maintenance and Care 10

Servicing Instructions 11

Abnormal Operation 11

Gaining Access to Burners and Pilot Assembly 11

Replacing/Servicing Gas Cocks, Thermocouples and Pilot 11

Table 4: Troubleshooting 12

Table 5: Spare Parts List..... 12

Product Specifications & Introduction

Appliance Name:	YCJSF Series Commercial Yum Cha Steamer
Manufactured By: **Certificate Holder:**	B&S Commercial Kitchen s Pty Ltd 57 Plateau Road Reservoir Victoria 3073 Tel; + 61 3 9469 4754 Fax: +61 3 9469 4504 E-mail: info@bscommercialkitchens.com
Model Number/s:	Supplied in various configurations. **How to read model numbers;** YCJSF – 1 – LS ① ② ③ ① **YCJSF –** Yum Cha Steamer (All Models) ② **Number of Steamer Holes** **1 –** Single Holes **2 –** Two Holes **3 –** Three Holes ③ **LS –** Low Splashback - Where Fitted **E.G.** YCJSF - LS Is a yum cha steamer, with two holes and has a low height splashback.
Approval Number:	GMK10338
Gas Type/s:	Natural Gas & Propane Gas

We are confident that you will be delighted with your B&S wok table, and that it will become the backbone of your kitchen. To ensure you receive the utmost benefit from your new B&S appliance, there are two important things you can do.

1. Ensure you read this booklet carefully and carefully follow the instruction given. Ensure that this booklet is kept in a safe and prominent location for future reference.

2. Should you be ensure of any aspect of the operation/performance, servicing and installation of the appliance, please contact your B&S dealer immediately. In most instances a phone call could answer your question.

IMPORTANT WARNINGS

THIS APPLIANCE SHALL ONLY BE INSTALLED/SERVICED BY AN AUTHORISED INSTALLER.

THIS APPLIANCE MUST BE INSTALLED IN ACCORDANCE WITH THE SPECIFIED INSTRUCTIONS AND SPECIFICATIONS.

IMPROPER INSTALLATION OR OPERATION OF THIS APPLIANCE MAY RESULT IN PRODUCT FAILURE WHICH MAY LEAD TO PROPERTY DAMAGE, PERSONAL INJURY OR DEATH.

CAUTION MUST BE TAKEN WHEN OPERATING THIS APPLIANCE TO MINIMISE RISK OF FIRE. THE APPLIANCE MUST NOT BE LEFTON UNATTENDED.

REGULAR INSPECTIONS BY AN AUTHORISED SERVICE PERSON ARE STRONGLY RECOMMENDED TO ENSURE PROPER AND SAFE FUNCTIONING OF THIS APPLIANCE.

AFTER ANY SERVICING OR ADJUSTING OF GAS CONNECTED COMPONENTRY, GAS LEAK TEST MUST BE CARRIED OUT TO ENSURE THERE ARE NO GAS LEAKING HAZARDS.

NEVER STORE ANY FLAMEABLE LIQUIDS/VAPOURS IN VACINITY OF THIS APPLIANCE. NEVER SPRAY AEROSOLS IN THE VICINITY OF THIS APPLIANCE WHILE IT IS IN OPERATION.

ENSURE ANY TRANSIENT PROTECTION IS REMOVED BEFORE INSTALLING THE APPLIANCE ENSURING ANY POSSIBLE DAMAGE TO THE APPLIANCE OR COMPONENTS/ PARTS THAT MAY HAVE BEEN SUSTAINED DURING TRANSPORTATION IS REPORTED TO THE MANUFACTURER.

THIS APPLIANCE IS NOT INTENDED TO BE USED IN A MARINE ENVIRONMENT. ENSURE APPLIANCE IS INSTALLED IN A STABLE POSITION.

FAILURE TO FOLLOW THE INFORMATION PROVIDED IN THIS BOOKLET WILL VOID THE B&S WARRANTY AND MAY RESULT IN DAMAGE TO EQUIPMENT OR INJURY TO PERSONNEL.

Table 1: Nominal Terminal Input Rates & Injector Sizes

Burner Type	Gas Type	Injector Size (mm)	MJ/h per Burner	Test Point Pressure
32 Jet Mongolian Burner	Natural Gas	1.10 (x32)	170	1.00kPa
	Propane Gas	0.60 (x32)	98	2.60kPa

Table 2: Standard Model General Information

	Weight (kg)	Overall Height* (mm)	Overall Depth* (mm)	Overall Width* (mm)
YCJSF-1	150	1,300	900	750
YCJSF-2	300	1,300	900	1,500
YCJSF-3	450	1,300	900	2,150

***Denotes minimum**

Overall Dimensions – Custom made appliances

Height over splashback	850mm - 1,300mm + adjustable legs
Width	2,400mm minimum with 3 steamer pots
Depth	900 – 1,050mm minimum

Figure 1: Plumbing Connections

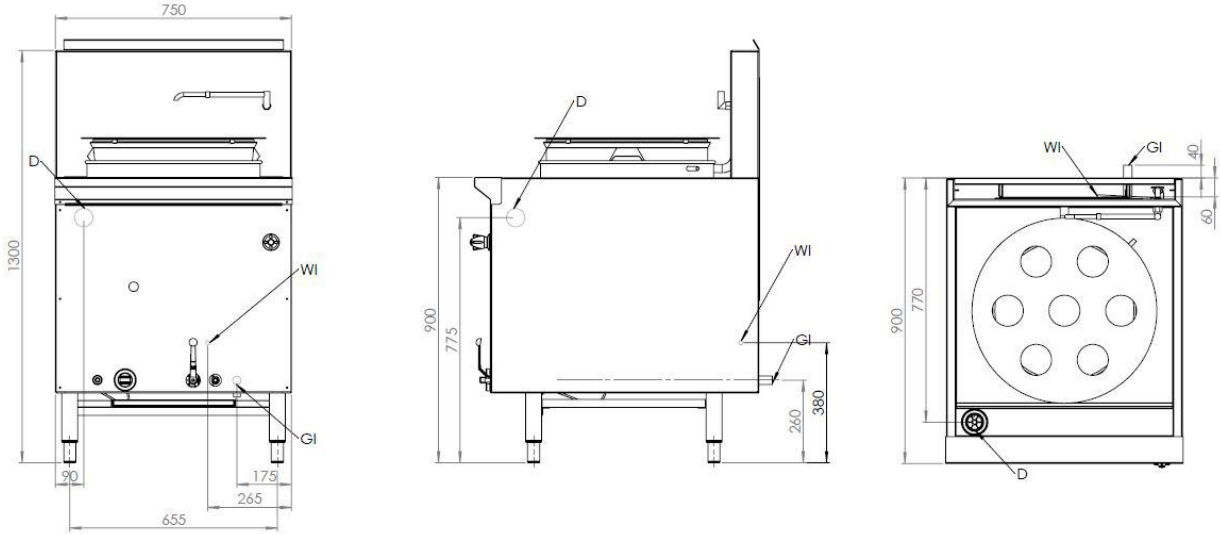

Table 3: Plumbing Connections

	Connection	Position from Floor (mm)	Position from Rear of Appliance (mm)	Position from LHS/RHS edge of Appliance (mm)
Water Inlet (WI)	½″ Copper	380 (+/-5)	60(+/-5)	265 (+/-5) LHS
Gas Inlet (GI)	¾″ male BSP	260 (+/-5)	40 (+/-5)	175 (+/-5) LHS
Waste (D)	1½″ male BSP	775 (+/-5)	770 (+/-5)	90 (+/-5) RHS

Installation Instructions

Regulations

The appliance **must** be installed only by authorised persons and in accordance with the manufacturer's installation instructions, local gas fitting regulations, municipal building codes, AS 5601 – Gas Installations and any other health and safety regulations, local authority, gas, electrical any other statutory regulations.

Data Label

The data label is located on the front of the appliance. This appliance is suitable for Natural Gas and LPG. Please ensure that the gas supply matches the Data Label ensuring that the gas supply is correct for the appliance being installed and that adequate supply pressure and volume is available – refer to appliance data plate for Mj/hr consumption, injector sizes of main burners/pilots, etc.

Ventilation

It is strongly recommended that the appliance is installed under an extraction hood. Ventilation must be in accordance with AS5601 - Gas Installations. In general, the appliance should have adequate ventilation for complete combustion of gas, proper flueing and to maintain temperature of immediate surroundings within safe limits. It is **strongly** recommended that this appliance is installed under an extraction hood.

Combustible Surfaces

Clearances to combustible surfaces must be in accordance with AS/NZS 5601.1 - *Gas Installations*, *clause 5.12.4.5.* Install on a flat/level floor. Where the floor is not fire resistant, a fire resistant material shall be put under the appliance which shall have a fire resistance rating at least equal to that of 10mm millboard. The material shall extend at least 50mm beyond the edge of the appliance.

Leave a clearance of at least 200mm between the appliance and any combustible surface.

No combustible materials shall be located within 500mm of the stock pot table.

Gas Connection

The gas connection is male ¾" BSP and is situated at the rear of the appliance below the main body frame. The inlet is to the ¾" pipe inlet located at the rear of the appliance.

This appliance is available in models for fixed installation.

The appliance can be connected with rigid pipe as specified in AS/NZ 5601. For fixed installation models we recommend connection with 20mm copper tube and a certified isolating ball valve.

BEFORE CONNECTING NEW PIPE TO THIS APPLIANCE, THE PIPE MUST BE BLOWN OUT THOROUGHLY TO REMOVE ALL FOREIGN MATERIAL. FOREIGN MATERIAL IN THE BURNER AND GAS CONTROLS WILL CAUSE IMPROPER AND DANGEROUS OPERATION.

Connect to gas.

Pressure Test Point

All appliances that are dispatched from our factory are tested and adjusted according to the specifications for the required gas type. The regulator may require adjustment to achieve required gas pressure.

Check the burner pressure at the test point on the regulator. The test point pressure should be adjusted to 1.00 kPa – Natural gas or 2.60 kPa – LPG with the burners operating at maximum.

Water Connection

The water connection is 15mm copper and is situated at the rear of the appliance below the main body frame. The number of water inlets varies to client's particular needs. Water isolation valves are fitted to all water inlets. Ensure water is flushed through before final connection.

Water waste outlet is located on the left hand side of the waste gutter of the appliance (50mm connection). The water inlets and water drains should be connected with rigid copper pipes. We do not recommend the usage of plastic/PVC piping for connection of waste outlet.

Before Leaving - Commissioning

Check **all** connections for gas leaks with soap and water. **Do not** use a naked flame for detecting leaks.

Ignite the pilot and main burners as prescribed below to ensure correct operation of gas valves, burners and ignition. When satisfied with the operation of the appliance, please instruct the user on the correct method of operation. Ensure that this instruction manual is left with owner of the appliance.

- **A.** Set thermostat to lowest setting. Model with Alpha Brass valve do not have a thermostat.
- **B.** Turn gas cock knob such that indicator knob points to 'OFF' (solid circle) position and allow 5 minutes for any gas in combustion chamber to escape (propane gas being heavier than air, may require forced ventilation). **Note:** If knob is 'ON' (flame) position, turn anti-clockwise to 'PILOT' (spark) position. Then depress knob and turn to 'OFF' position.
- **C.** Turn gas cock knob clockwise so indicator points to 'PILOT' position.
- **D.** Then light the pilot manually while depressing the gas cock knob.
- **E.** Keep knob fully depressed for thirty seconds.
- **F.** Release gas cock knob. Pilot flame should continue to burn. Observe pilot is established. If pilot goes out when knob is released, repeat steps **A** to **F** allowing more time for thermocouple or pilot generator to heat up.

G. When pilot stays alight, operation of gas valve may be given over to thermostat by turning gas cock counter clockwise so indicator points to 'ON' position (flame).

H. Set thermostat (if fitted) to desired temperature.

In the event the appliance fails to operate correctly, check the following;

1. Data plate to ensure correct gas type and pressure (adjust if necessary).
2. Injector sizes – check against data plate and installation manual.
3. View pilot size and adjust if required.

In case appliance fails to operate correctly after all checks have been carried out, pleased contact;

B&S Commercial Kitchens Pty Ltd
57 Plateau Road
Reservoir VIC 3073
Tel.: + 61 3 9469 4754 Fax.: + 61 3 9469 4504 E-mail: info@bscommercialkitchens.com

Operating Instructions

WARNING!

- **DO NOT** spray aerosols in the vicinity of this appliance while it is in operation.
- **DO NOT** store or use flammable liquids or items in the vicinity of this appliance.
- Prior to lighting, smell area surrounding the appliance for gas (please note that as some gas types are heavier than air, we recommended the operator to also smell the floor around the appliance).
- In the event you smell gas: **DO NOT** light any appliance. **DO NOT** touch/ operate any electrical switch or phone in your building. Call local gas supplier **immediately** and follow their instructions.

IMPORTANT WARNING!

ALWAYS ENSURE NOODLE COOKER PAN HAS WATER IN IT WHEN MAIN BURNERS AND PILOT LIGHT ARE ALIGHT.

To ensure noodle cooker pan is clean from any contamination resulting from the appliances manufacture, shipping and installation, the noodle cooker pan must be boiled out before first use.

NEVER LEAVE THE APPLIANCE UNATTENDED DURING THE BOIL-OUT PROCESS. IF THE BOIL-OUT SOLUTION OVER BOILS, IMMEDIATELY TURN THE NOODLE COOKER OFF AND LET THE SOLUTION COOL FOR A FEW MINUTES BEFORE RESUMING THE PROCESS.

BEFORE LIGHTING THE NOODLE COOKER, MAKE SURE THE NOODLE COOKER IS 'OFF' AND THE NOODLE COOKER PAN DRAIN VALVE(S) IS/ARE CLOSED. NEVER ALLOW BURNER TO OPERATE WITH TANK EMPTY. LIGHT ONLY WHEN THE WATER IS AT THE MINIMUM OPERATING WATER MARK LOCATED ON REAR PANEL OF PAN (WHEN LOOKING INTO PAN STANDING IN FRONT OF THE APPLIANCE.

IMPORTANT WARNING!

ENSURE NO OR MINIMAL AMOUNTS OF OIL AND FOODSTUFFS FALL INTO THE BURNER AREA WHILST COOKING. FAILURE TO DO SO MAY AFFECT THE EFFICIENT AND SAFE OPERATION ON THE APPLIANCE AND **MAY VOID WARRANTY**

Figure 2: YCJSF Series Yum Cha Steamer - Knowing Your Appliance

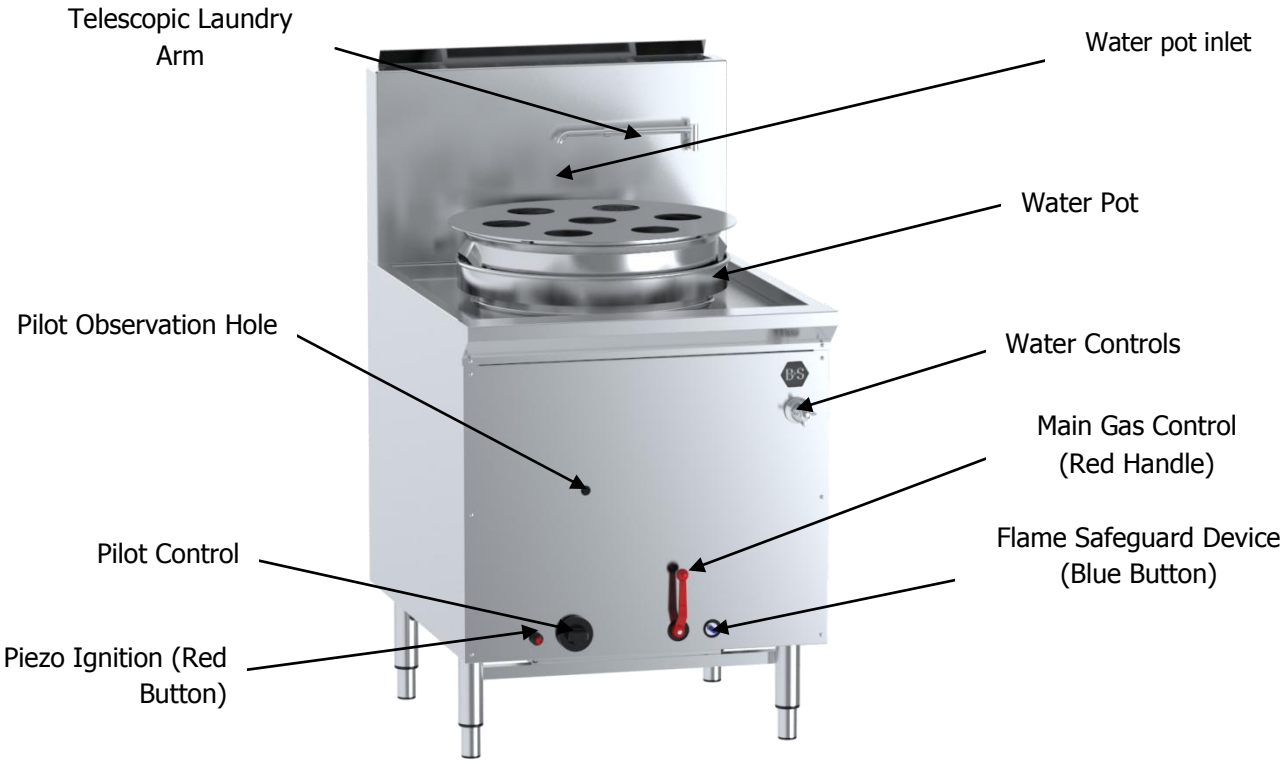

Lighting Instructions

- **A.** To light pilot. Push in flame safeguard button on bottom RHS of front panel.
- **B.** Hold pilot in and turn pilot gas cock anti-clockwise to 'ON' position.
- **C.** Press piezo (red) button on bottom LHS Front panel while still holding in the flame safeguard button. Continue to hold in flame safeguard button for 25-30 seconds.
- **D.** Check whether pilot is alight by looking through the observation hole at the bottom of the front panel left of centre. if not alight repeat procedure **A** to **C**.
- **E.** Light main burner by turning the main burner control (red handle) anti-clockwise to 'ON' position.
- **F.** Regulate size of flame with the burner control.

Shutdown Procedure

- **A.** To turn pilot off, turn knob clockwise to 'OFF' position.
- **B.** Ensure the main burner and pilot are extinguished.

Note: This appliance should burn with blue flame. If the appliance is burning with a yellow flame and cannot be adjusted to burn correctly please turn the appliance off and contact B&S Commercial Kitchen Appliances Pty Ltd or their authorised service agent.

Telescopic Laundry Arm - Manual Control

The telescopic laundry arm serves the purpose of filling the steamer pot with water during the cooking cycle and for cleaning the appliance. To activate;

1. Locate spindle on front panel with 'Spout' sticker located above it.
2. Turn spindle anti-clockwise to activate water for deck cooling.
3. To cease water flowing from deck cooling, turn 'Spout' spindle clockwise.

Deck Cooling - Manual Control

The telescopic laundry arm serves the purpose of cleaning the wok pan in between meals being cooked. Or for filling the wok cooking pan with water to be used for cooking purposes. To Activate;

1. Locate spindle on front panel with 'Deck' sticker located above it.
2. Turn spindle anti-clockwise to activate water for deck cooling.
3. To cease water flowing from deck cooling, turn 'Deck' spindle clockwise.

Operating Procedure - Yum Cha Steamer

1. Turn main gas valve to 'OFF'.
2. Fill water pot by placing laundry arm over water pot inlet and turning on the water control labeled 'WokSpout'.
3. Turn on water deck cooling of appliance by turning on water control labeled 'DECK'. **Bearing water conservation in mind, please ensure that waterflow is regulated such that only a minimal amount of water flows over the deck of the appliance**.
4. Turn main gas valve to 'ON'.
5. Once water in water pot has boiled, turn main gas valve to 'OFF'.
6. Place product on Yum Cha plate. If using more than one tier of the Yum Cha support, ensure tiers are securely interlocked.
7. Turn main gas valve to 'ON'.
8. Position the laundry arm over the water pot inlet and turn on a minimal flow of water to fill the pot whilst in operation.

Once cooking cycle is complete, turn the main gas valve to 'OFF' position, turn water cooling and laundry arm water supply 'OFF' and remove product.

IMPORTANT WARNING!

NEVER LEAVE WATER RUNNING FROM TELESCOPIC LAUNDRY ARM WHILST POSITIONED OVER THE WOK SUPPORT RING WITH NO WOK PAN POSITIONED ON IT. ALWAYS MOVE THE TELESCOPIC LAUNDRY ARM PARALLEL TO THE SPLASHBACK OF THE APPLIANCE WHEN NOT IN USE. DIRECT FLAME CONTACT WITH LAUNDRY ARM MAY DAMAGE OPERATION OF LAUNDRY ARM SPOUT.

Maintenance and Care

To ensure longevity and continued performance efficiency of you appliance, a good cleaning and maintenance program is paramount. In general the use of steel wool abrasive cloths/cleaners/powders **should not** be used to clean this appliance.

Daily Checks & Service

- Look for any foreign materials in burner area, leaks, damaged knobs and any other signs that the boiling top is not ready and safe for operation.
- Inspect burner area and ensure pilots (if fitted) are in position near the burner, and that the pilot flame when ignited is blue in color and approximately 10-20mm in length.
- If fitted with thermocouple ensure pilot flame is in contact with it. Call the manufacturer if you see any problems.
- Always ensure that area surrounding pilot and thermocouple (if fitted) is clear of any fats, oils or foodstuffs.
- Clean the appliance with a clean, damp cloth soaked with mild detergent to remove any food stuffs, oils, dust and any other materials.
- The spillage trays located under the main body of the appliance should be removed (by pulling out) and any carbonised foodstuffs and oils should be removed using a clean, damp cloth soaked in a mild detergent.

Yearly Checks & Service

- **The appliance should be inspected and adjusted periodically by a qualified service person as part of any kitchen maintenance program.**
- **B&S recommends that this appliance is inspected at least annually by a authorised service technician as follows:**
  - Inspect the table inside-out for excessive build-up of any fats, oils and foodstuffs.
  - Inspect that the burners and other components (i.e. pilots, thermocouples, etc.) are in good condition and functioning properly.
  - Inspect all gas connections for leaks and ensure all connections are tightened properly.
  - Ensure burner manifold pressure is in accordance with that specified on the data plate of the appliance.
  - Inspect all gas connections for leaks and ensure all connections are tightened properly.

In case of difficulties, contact B&S Commecial Kitchens Pty Ltd or their authorised service agent.

Servicing Instructions

WARNING!

- Servicing shall be carried out by autorised personnel **only**. Failure to do so will void the B&S warranty and may result in damage to equipment or injury to personnel.
- Before commencing any disassembly/ assembly of gas controls, please ensure the gas supply is turned off (isolated).

FAILURE TO DO SO WILL VOID B&S WARRANTY AND MAY RESULT IN DAMAGE TO EQUIPMENT OR INJURY TO PERSONNEL.

Abnormal Operation

Any of the following are considered to be abnormal operation and may require servicing;

- Incomplete ignition of burner/burner failing to keep alight.
  - Check burner is not blocked.
- Pilot is not holding
  - Check connection of the thermocouple to the control is not loose.
  - Check if pilot flame is in contact with thermocouple.
- No pilot flame
  - Check main gas valve is in 'ON' position.
  - Ensure pilot injector is not blocked.
- Gas valves which are difficult to turn.

Gaining Access to Burners and Pilot Assembly

1. To gain access to appliance burner and pilot assembly, remove water pot from appliance, ensuring all water is removed. **Note:** Use extreme care when removing water pot as it may still be hot from appliance operation.

Replacing/Servicing Gas Cocks, Thermocouples and Pilot

1. To remove burner, undo bolt at centre of burner which is accessible from the top after lifting out the steamer pot. Undo the two barrel unions just in front of the inlet of the burners and lift out burner.
2. The pilot is situated on the right hand side inlet of the burner and is accessible from the top. To remove, undo a single screw.
3. Flame safeguard, gas cocks and piezo are accessible from the front and can be removed by undoing the respective unioins.
4. Water taps are accessible by removing the back cover which is held by three screws either side.
5. REASSEMBLE IN REVERSE ORDER.

Table 4: Troubleshooting

Fault	Possible Cause	Checks
Pilot light not igniting	Blockage of pilot	Check pilot injector is not blocked as described in servicing instructions – pilot and flame safeguard
	Adjustment of pressure from flame failure control	Check gas pressure to pilot as described under servicing instructions – adjustments
Pilot light not establishing	Positioning of thermocouple	Check connection of the thermocouple to the control is not loose.
	Faulty thermocouple	Adjust positioning of thermocouple to ensure pilot flame is hitting thermocouple
	Faulty flame failure control valve	Contact manufacturer or authorised service agent
		Contact manufacturer or authorised service agent

Table 5: Spare Parts List

Part Number	Description
031	32 Jet Mongolian Burner
005	¾"M&F Ball Valve
005A	Red Handle for Ball Valve
006	¾" D3 Control
007	Pilot Gas Cock
008	Pilot Gas Cock Knob
010A	Cold Water Button
010B	Dome Handle
010C	Screw/Spring Type Flange
010D	Spindle
011	Round Pilot
012	Screw Thermocouple
033	Laundry Arm
010	Front Stop tap
016	Steamer pot
036A	Piezo Lead
036	Piezo
034NG	Delta Pilot (Natural Gas)
034LPG	Delta Pilot (Propane Gas)
034ANG	Delta Pilot Injector Spud (Natural Gas)
034ALP	Delta Pilot Injector Spud (Propane Gas)
665NG	¾" Oara Regulator (Natural Gas)

To obtain further service information concerning this appliance, pleased contact;

B&S Commercial Kitchens Pty Ltd
57 Plateau Road
Reservoir VIC 3073
Tel.: + 61 3 9469 4754 Fax.: + 61 3 9469 4504 E-mail: info@bscommercialkitchens.com