B+S BLACK SERIES: CBR-3

Char Broiler 300mm

Project: _____ Item: _____

CBR-3

Standard Features & Benefits:

- AISI 304 grade stainless steel
- Heavy duty cast iron cooking J grates and radiant hoods
- Piezo ignition and flame failure device
- Multi-setting gas valve as standard allowing for greater regulation of flame setting
- Open stand with under shelf
- Easy to clean fat spillage tray
- Front access to all components make service easy
- Heavy duty stainless steel frame construction
- 18 month warranty

Options:

- Natural or LP gas

Specifications:

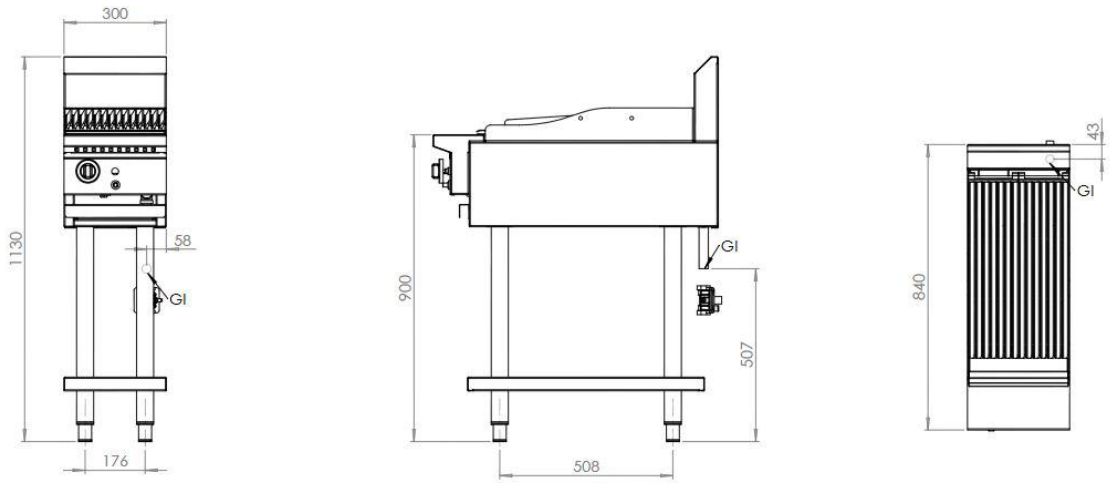

MODEL	LENGTH (mm)	DEPTH (mm)	HEIGHT (mm)	GAS CONSUMPTION (Mj/h)	
				NG	LPG
CBR-3	300	840	1130	26	25

Connections:

- Gas (GI) : ¾" BSP
- Supply Pressure:
  - NG : 1.0 kPa
  - LPG : 2.6 kPa
- Regulator is included in the unit
- Must be installed by an authorised installer

B+S Commercial Kitchens
57 Plateau Road Reservoir VIC 3073 Australia | +61 3 9469 4754
info@bscommercialkitchens.com | www.bscommercialkitchens.com