B+S BLACK SERIES: YCJSF-1HE

Single Hole Waterless Heat Exchange Steamer

Project: _____ Item: _____

YCJSF-1HE

Standard Features & Benefits:

- AISI 304 grade stainless steel
- Stronger supply of steam than conventional yum cha steamers
- Water consumption reduced by up to 100 litres per hour
- 2mm stainless steel tank
- Cabinet mounted stainless steel exterior & interior
- Lever handle gas control
- Overheat safety device to prevent tank dry-boil
- Piezo ignition and flame failure as standard
- More efficient and lower gas consumption than traditional yum cha steamers
- Water comes to boil in less than 20 minutes from ambient temperature of 20 degrees Celsius
- Perforated steaming plate included
- Duck bill jet burner
- 18 month warranty

Options:

- Natural or LP Gas

Specifications:

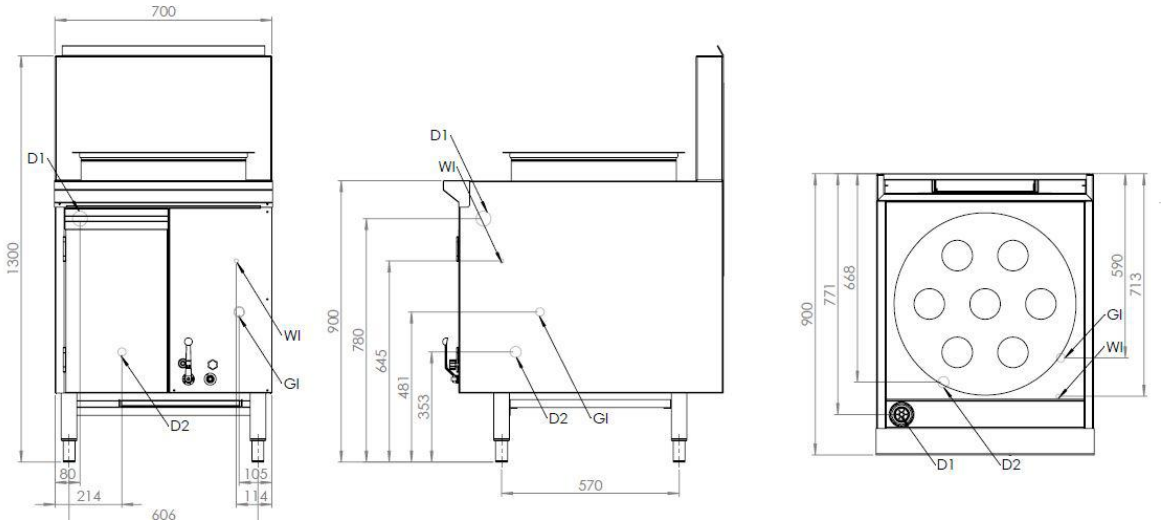

MODEL	LENGTH (mm)	DEPTH (mm)	HEIGHT (mm)	GAS CONSUMPTION (Mj/h)	
				NG	LPG
YSJSF-1HE	700	900	1300	88	85

Connections:

- Gas (GI) : ¾" BSP
- Water (WI) : ½" Copper
- Waste (D1; D2) : D1 = 1½"BSP; D2 = ¾"BSP
- Supply Pressure:
  - NG : 1.0 kPa
  - LPG : 2.6 kPa
- Regulator is included in the unit
- Must be installed by an authorised installer

B+S Commercial Kitchens
57 Plateau Road Reservoir VIC 3073 Australia | +61 3 9469 4754
info@bscommercialkitchens.com | www.bscommercialkitchens.com