Josper®
CHARCOAL OVENS

Charcoal Oven HJX50L*ACXP

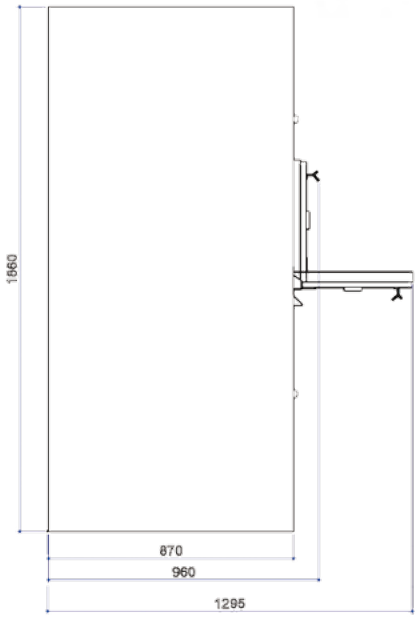

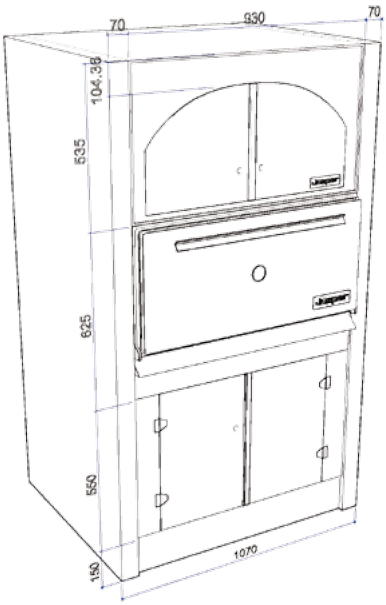

TECHNICAL INFORMATION		
Fire up time[1]	40 min average	40 min average
Josper charcoal daily consumption	16 to 20 kg average	35 lb to 44 lb average
Performance	9 h	9 h
Production per hour[2]	110 kg average	242.5 lb average
Cooking temperature	300 ºC to 350 ºC	572 ºF to 662 ºF
Oven capacity in GN trays (per grill rack)	2 x GN 1/1 + 2 x GN 1/2	2 x GN 1/1 + 2 x GN 1/2
Power equivalence	6 kW	8 hp
Exhaust rate[3]	3500 m³/h	2060 cfm
Maximum smoke flow	14 g/s	0.49 oz/s
INSTALLATION		
Recommended installation height		
Clearance with other cooking equipment		
BUNDLES: SIZES AND WEIGHTS		
Sizes bundle 1	1010 x 1010 x 905 mm	39,8 x 39,8 x 35,6 in
Sizes bundle 2	1010 x 1010 x 840 mm	39,8 x 39,8 x 33,1 in
Sizes bundle 3	1200 x 800 x 2010 mm	47,2 x 31,5 x 79,1 in
Gross weight bundle 1	287 kg	633 lb
Gross weight bundle 2	76 kg	168 lb
Gross weight bundle 3	172 kg	379 lb

INCLUDED ACCESSORIES

- Smoke outlet vent
- One cooking grill rack
- Charcoal grates
- Josper tongs
- Bristle brush
- Poker
- Ash hatch and handle
- Ash pan

OPTIONAL ACCESSORIES

- Extra cooking grill rack
- Firebreak
- Firebreak's hat
- Cookware[4]

1 Please, check our document titled "Fire up and use of the Josper oven".
2 Please, check our "Cookbook".
3 Please, check our document titled "Installation advices of the Josper oven".
4 Please, see our wide range of cookware in our website. SEE MORE

Ovens' sizes and weights are to be considered with the standard accessories and packing.

A continual improvement process may require us to change specifications without any notice.
Revised June 2012.

Josper®
CHARCOAL OVENS
JOSPER S.A. Montpalau 1-3
08397 Pineda de Mar - Barcelona - SPAIN
T +34 93 767 15 16
josper@josper.es