INSTALLATION, OPERATING AND SERVICING INSTRUCTION MANUAL

Verro Combination BT Series Boiling Top, GRP Series Griddle Hot Plate and CBR Series Char Grill / Broiler with Oven Range

Approval No.; GMK10349

Manufactured By;
B&S Commercial Kitchens Pty Ltd
57 Plateau Road Reservoir VIC 3073 AUSTRALIA
Tel: +61 3 9469 4754 **Fax:** +61 3 94694504 **Web:** www.bscommercialkitchens.com

Please ensure this booklet is kept in a safe and prominent location for future reference.

The reproduction on or copying of any part of this booklet via any means is strictly forbidden unless agreed to in writing by the manufacturer.
Owing to continual product development and improvements to its products, B&S Commercial Kitchens Pty Ltd reserves the right to change the product specifications and design without prior notice.

Table of Contents

INSTALLATION, OPERATING AND SERVICING INSTRUCTION MANUAL ..... Error! Bookmark not defined.

Verro Combination BT Series Boiling Top, GRP Series Griddle Hot Plate and CBR Series Char Grill / Broiler with Oven Range 1

Product Specifications & Introduction.....4

IMPORTANT WARNINGS.....5

Table 1: Nominal terminal Input Rates & Injector Sizes 5

Table 2: Standard Model General Information..... 6

Figure 1: Plumbing Connections..... 6

Table 3: Plumbing Connections 6

Installation Instructions 6

Regulations..... 6

Data Label 6

Ventilation 6

Combustible Surfaces 7

Gas Connection..... 7

Pressure Test Point 7

Before Leaving - Commissioning..... 7

Operating Instructions 10

IMPORTANT WARNING!.....10

Figure 2: Knowing Your Appliance..... 11

Figure 3: Control Panel – Boiling Top 11

Boiling Top Lighting Instructions..... 11

Boiling Top Shutdown Procedures 12

Figure 4: Control Panel – Grill Plate / Char Grill 12

Char Grill/Broiler Lighting Instructions..... 12

Char Grill/Broiler Shutdown Procedure 12

Griddle Hot Plate Lighting Instructions 13

Griddle Hot Plate Shutdown Procedure 13

Oven Section 13

Maintenance and Care 13

Servicing Instructions 15

Abnormal Operation 15

Gaining access to gas system – Boiling Top Section..... 15

Gaining Access to Gas Components – Grill Plate..... 16

Replacing/Servicing Gas Cocks, Thermocouples, Piezo Ignition, Pilot and Burner – Grill Plate..... 16

Gaining Access to Char Grill Burner..... 17

Adjusting Burner Aeration – Char Grill 17

Replacing/Servicing Gas Cocks, Thermocouples and Pilot – Char Grill..... 17

Gaining Access to Oven Burner and Oven Pilot Burner..... 17

Replace Oven Thermostat..... 18

Replace Oven Thermocouple Lead..... 18

Table 4 : Troubleshooting 19

Warranty on B&S Commercial Cooking Appliances..... Error! Bookmark not defined.

Product Specifications & Introduction

Appliance Name:	Combination BT Series Boiling Top, GRP Series Griddle Hot Plate and CBR Series Char Grill/Broiler and Oven range
Manufactured By: **Certificate Holder:**	B&S Commercial Kitchen s Pty Ltd 57 Plateau Road Reservoir Victoria 3073 Tel; + 61 3 9469 4754 Fax: +61 3 9469 4504 E-mail: info@bscommercialkitchens.com
Model Number/s:	**How to read model numbers;** V – OV – SBX X – CCCY – CCCY – CCCY – FF – BM – P – CL ① ② ③ ④ ⑤ ⑤ ⑤ ⑥ ⑦ ⑧ ⑨ ① **V** = Verro Series ② **OV** = Oven ③ **SB** = Boiling burners **X** = 2, 4, 6, 8. ④ **X** = E or G Burner ⑤ **CCC** = CBR, CGR, GRP, **Y** = 3, 6, 9 (300, 600 or 900mm sections) ⑥ **FF** = Fan Forced Oven ⑦ **BM** = Bench mount (any model with oven cannot be bench mount) ⑧ **P** = Plinth mount ⑨ **CL** = Cantilever **E.G.** V – OV – SB2E – CBR3 – GRP6 – FF Is a Verro series oven with a two burner boiling top section with the E burner, 300mm char broiler section and 600mm griddle hot plate section. The oven is fan forced. V – OV – SB2G – CBR3 – GRP3 Is a Verro series oven with a two boiling burner top section fitted with G burners, 300mm char broiler section and 300mm griddle hot plate Section. The oven is standard convection. This range of appliances is also available with the Char Broiler, Char Griddle Hot Plate and Boiling Top sections without the oven section and either bench mount or in the standard height frame. When bench mounted the sections can be up to 1200 mm wide.
Approval Number:	GMK10349
Gas Types:	Natural Gas and Propane Gas

We are confident that you will be delighted with your B&S product, and that it will become the backbone of your kitchen. To ensure you receive the utmost benefit from your new B&S appliance, there are two important things you can do.

1. Ensure you read this booklet carefully and carefully follow the instructions given. Ensure that this booklet is kept in a safe and prominent location for future reference.

2. Should you be unsure of any aspect of the operation/performance, servicing and installation of the appliance, please contact your B&S dealer immediately. In most instances a phone call could answer your question.

IMPORTANT WARNINGS

THIS APPLIANCE SHALL ONLY BE INSTALLED/SERVICED BY AN AUTHORISED INSTALLER.

THIS APPLIANCE MUST BE INSTALLED IN ACCORDANCE WITH THE SPECIFIED INSTRUCTIONS AND SPECIFICATIONS.

IMPROPER INSTALLATION OR OPERATION OF THIS APPLIANCE MAY RESULT IN PRODUCT FAILURE WHICH MAY LEAD TO PROPERTY DAMAGE, PERSONAL INJURY OR DEATH.

CAUTION MUST BE TAKEN WHEN OPERATING THIS APPLIANCE TO MINIMISE RISK OF FIRE. THE APPLIANCE MUST NOT BE LEFT ON UNATTENDED.

REGULAR INSPECTIONS BY AN AUTHORISED SERVICE PERSON ARE STRONGLY RECOMMENDED TO ENSURE PROPER AND SAFE FUNCTIONING OF THIS APPLIANCE.

AFTER ANY SERVICING OR ADJUSTING OF GAS CONNECTED COMPONENTRY, GAS LEAK TEST MUST BE CARRIED OUT TO ENSURE THERE ARE NO GAS LEAKING HAZARDS.

NEVER STORE ANY FLAMMABLE LIQUIDS/VAPOURS IN THE VICINITY OF THIS APPLIANCE. NEVER SPRAY AEROSOLS IN THE VICINITY OF THIS APPLIANCE WHILE IT IS IN OPERATION.

ENSURE ANY TRANSIENT PROTECTION IS REMOVED BEFORE INSTALLING THE APPLIANCE ENSURING ANY POSSIBLE DAMAGE TO THE APPLIANCE OR COMPONENTS/PARTS THAT MAY HAVE BEEN SUSTAINED DURING TRANSPORTATION IS REPORTED TO THE MANUFACTURER.

THIS APPLIANCE IS NOT INTENDED TO BE USED IN A MARINE ENVIRONMENT.

ENSURE APPLIANCE IS INSTALLED IN A STABLE POSITION.

FAILURE TO FOLLOW THE INFORMATION PRIVIDED IN THIS BOOKLET WILL VOID THE B&S WARRANTY AND MAY RESULT IN DAMAGE TO EQUIPMENT OR INJURY TO PERSONNEL

Table 1: Nominal terminal Input Rates & Injector Sizes

Gas Type	Injector Size (mm)	MJ/h rating per burner	Test Point Pressure
		Boiling Top Section	
E Burner NG	2.50 (0.45)	31.0	1.00 kPa
E Burner LPG	1.45 (0.25)	23.0	2.60 kPa
G Burner NG	2.70 (0.45)	34.0	1.00 kPa
G Burner LPG	1.60 (0.25)	30.0	2.60 kPa
C Burner NG	1.80 (0.45)	15.0	1.00 kPa
C Burner LPG	1.05 (0.25)	13.0	2.60 kPa
		Char Broiler Grill Section	
NG	2.30 (0.41)	25.6	1.00 kPa
LPG	1.40 (0.25)	25.0	2.60 kPa
		Griddle Hot Plate Section	
NG	2.00 (0.41)	22.0	1.00 kPa
LPG	1.20 (0.25)	22.0	2.60 kPa
		600mm Oven Section	
NG	2.50	29.0	1.00 kPa
LPG	1.45	23.0	2.60 kPa
		900mm Oven Section	
NG	2.50	29.0	1.00 kPa
LPG	1.45	23.0	2.60 kPa

Gas Pressure and Rate Details

Refer to appliance data plate for details.

Table 2: Standard Model General Information

	Weight (kg)	Overall Height* (mm)	Overall Depth* (mm)	Overall Width* (mm)
600mm combinations	200	930min	840	600
900mm combinations	300	930min	840	900
1,200mm combinations	400	930min	840	1,200

Figure 1: Plumbing Connections

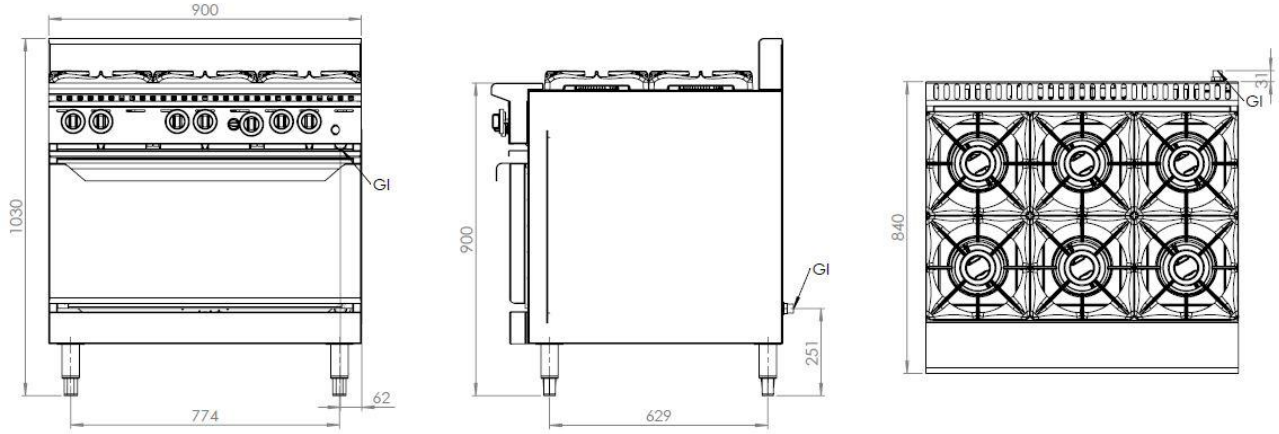

Table 3: Plumbing Connections

	Connection	Position from Floor (mm)	Position from Rear of Appliance (mm)	Position from LHS/RHS edge of Appliance (mm)
Gas Inlet (GI)	¾" male BSP	251 (+/-5)	31 (+/-5)	62 (+/-5) RHS

Installation Instructions

Regulations

The appliance **must** be installed only by authorised persons and in accordance with the manufacturer's installation instructions, local gas fitting regulations, municipal building codes, AS/NZ 5601 – Gas Installations and any other health and safety regulations, local authority, gas, electrical any other statutory regulations.

Data Label

The data label is located on the front of the appliance. This appliance is suitable for Natural Gas and LPG. Please ensure that the gas supply matches the Data Label ensuring that the gas supply is correct for the appliance being installed and that adequate supply pressure and volume is available – refer to appliance data plate for Mj/hr consumption, injector sizes of main burners/pilots, etc.

Ventilation

It is strongly recommended that the appliance is installed under an extraction hood. Ventilation must be in accordance with AS5601 - Gas Installations. In general, the appliance should have adequate ventilation for complete combustion of gas, proper flueing and to maintain temperature of immediate surroundings within

safe limits. It is **strongly** recommended that this appliance is installed under an extraction hood.

Combustible Surfaces

Clearances to combustible surfaces must be in accordance with AS 5601/AG 601- *Gas Installations*, *clause 5.12.4.5.* Install on a flat/level floor. Where the floor is not fire resistant, a fire resistant material shall be put under the appliance which shall have a fire resistance rating at least equal to that of 10mm millboard. The material shall extend at least 50mm beyond the edge of the appliance.

Maintain a clearance of at least 50mm between the sides of the appliance and the wall.

No combustible materials shall be located within 150mm of the appliance.

Plinth Mount For Plinth mount the legs are removed and a concrete slab of at least 100 mm thickness is used. When the unit is Plinth mounted, the plinth depth must be no greater than 700mm.

Gas Connection

The gas connection is male 3/4" BSP and is situated at the rear of the appliance below the main body frame. The inlet is to the ¾" elbow located at the rear of the appliance.

This appliance is available in models for fixed installation or in models fitted with lockable wheels/castors.

The appliance can be connected with rigid pipe as specified in AS5601. For fixed installation models we recommend connection with 20mm copper tube and an AGA approved isolating ball valve.
For models fitted with lockable wheels/castors an AGA approved stainless steel braided flexible hose of adequate internal diameter must be used and approved under AS/NZS 1869 and be of class B or D. The fitting of the hose must comply with the relevant sections of gas installation code AS 5601. A restraining chain or wire must be fitted. We recommend a maximum length of 1.5 M for the flexible hose. When the appliance is in position all of the wheels/castors must have the built in lock engaged to prevent any movement of the appliance. An AGA approved isolating ball valve must also be fitted.

BEFORE CONNECTING NEW PIPE TO THIS APPLIANCE, THE PIPE MUST BE BLOWN OUT THOROUGHLY TO REMOVE ALL FOREIGN MATERIAL. FOREIGN MATERIAL IN THE BURNER AND GAS CONTROLS WILL CAUSE IMPROPER AND DANGEROUS OPERATION.

Pressure Test Point

All appliances that are dispatched from our factory are tested and adjusted according to the specifications for the required gas type. The regulator may require adjustment to achieve required gas pressure.

Check the burner pressure at the test point on the regulator. The test point pressure should be adjusted to 1.00 kPa – Natural gas or 2.60 kPa – LPG with the burners operating at maximum.

Before Leaving - Commissioning

Check **all** connections for gas leaks with soap and water. **Do not** use a naked flame for detecting leaks.

Ignite the pilot and main burners as prescribed below to ensure correct operation of gas valves, burners and ignition. When satisfied with the operation of the appliance, please instruct the user on the correct method of operation. Ensure that this instruction manual is left with owner of the appliance.

Boiling Top Section

If burner fitted with pilot and/or flame failure

A. Ensure gas control is in the 'OFF' position.

B. Depress operating knob of relevant burner and turn anti-clockwise to 'PILOT' position and light pilot.

C. Observe the pilot light is established. Pilot flame should be between 10-20mm in size and be in direct contact with thermocouple (where fitted). Should the thermocouple require adjustment, lift off

trivet and undo the nut holding thermocouple on pilot assembly. After adjusting reassemble in reverse order.

D. If pilot light does not light, turn control knob to 'OFF' position, wait five minutes and repeat steps **A** to **C**.

Note. If pilot flame is smaller than the parameters described in part **A**, check the pilot gas line (6mm stainless steel flexible tube) for any possible blockages/crimpage. To gain access to gas control components, remove control knobs and undo screws located on either side and at the top of the front panel. Remove front panel (reassemble in reverse order).

E. Once pilot is established turn control knob anti-clockwise to the 'HIGH' position. Examine flame.

F. Turn control knob clockwise to the 'LOW' position. Examine flame.

G. Turn control knob clockwise to the 'OFF' position.

H. Repeat steps **A** to **H** for all burners.

If appliance is not fitted with pilot and/or flame failure.

A. Ensure gas control is in the 'OFF' position.

B. Depress operating knob of relevant burner and turn anti-clockwise 180° to the 'LOW' position and light burner. Examine flame.

C. Turn control knob clockwise to the 'HIGH' position. Examine flame.

D. Turn control knob clockwise to the 'OFF' position.

E. Repeat steps **A** to **D** for all burners.

Adjusting aeration of pot burner (if required)

<u>ALWAYS USE CAUTION WHEN REMOVING TRIVETS AND BURNERS, SURFACE MAY BE HOT.</u>

If necessary to adjust aeration to burners;

- To adjust primary air on boiling top burners, remove front burners by lifting the burner at the rear, and then slowly pulling it towards the splashback (rear) of the appliance. Adjust the grub screw located on the side of the venturi section, and then slide the venture in our out accordingly. (Clockwise: more interruption, Anti-clockwise: Less interruption). Replace burner and light. Repeat the process if necessary for all burners.

Char Grill/broiler / Griddle hot plate Section

A. Select appropriate knob. Ensure the control knob is in the 'OFF' position. If not, turn control knob clockwise until it is in the 'OFF' position.

B. Push knob, and turn knob anti-clockwise to 'PILOT' position.

C. Whilst keeping the knob pushed in, press and release piezo ignition three to four times to ignite pilot. Should piezo electrode not spark, ensure piezo ignition lead is firmly fitted at the rear of the piezo control as well as underneath the sparking electrode.

D. Continue to hold the knob for 30 seconds after the flame appears on the pilot. Release the knob. The pilot should remain lit. Observe that the pilot light is a rich blue color by looking up between the front control panel and spillage tray. Pilot flame should be between 10-20mm in size and be in direct contact with thermocouple. Should the thermocouple require adjustment, access to it can be gained by lifting char grill grates, and volcanic rock tray. Undo the nut holding thermocouple onto pilot assembly and adjust. After adjusting reassemble in reverse order. If pilot fails to remain lit, push down the control knob and turn clockwise to the 'OFF' position. Wait for five minutes before attempting to re-light (repeat steps **A** to **D**). Should pilot still not light, ensure pilot flame is hitting thermocouple and adjust as required.

Note. If pilot flame is smaller than the parameters described in part **D**, check the pilot gas line (6mm stainless steel flexible tube) for any possible blockages. To gain access to gas control components, remove control knobs and undo screws located on either side and at the top of the front panel. Remove front panel (reassemble in reverse order).

E. Once the pilot is lit, push down and slowly turn the knob anti-clockwise to the 'HIGH' position. Observe flame is rich blue in color. Adjust aeration to burner if required. To adjust aeration, remove char grill grate from appliance by lifting and pulling towards the front of the appliance. Slowly lift volcanic rock tray upwards (volcanic rocks may be removed from tray for greater ease in removing rock tray) and remove towards the font of the appliance. Remove burner locking pin located under the burner support bar at the rear of the burner. Lift rear part of the burner gently and pull towards the splashback of the appliance. Loosen screw of butterfly valve at the inlet and adjust. Reassemble in reverse order.

F. Adjust the size of the flame as required by turning knob anti-clockwise.

G. To turn burner off whilst keeping pilot lit, turn knob clockwise to the 'PILOT' position.
H. To turn pilot off, turn knob clockwise to 'OFF' position.
I. Test for all burners

Oven Section

A. Turn oven control knob to the pilot position
B. Depress knob and at the same time press the piezo igniter to light the pilot. For first time operation this process may need to be repeated several times
C. Once pilot is established continue to keep the knob depressed for at least 30 seconds.
D. Turn knob to desired temperature setting.
E. When cooking is finished the oven control knob can be turned back to the pilot position until the next cook or if desired the pilot can be turned off by turning the knob back to the off position.

In the event the appliance fails to operate correctly, check the following;

1. Data plate to ensure correct gas type and pressure (adjust if necessary)
2. Adjust aeration by adjusting air shutter located at the front of the venture of the main burner.
3. Injector sizes – check against data plate and installation manual
4. View pilot size and adjust if required.

In case appliance fails to operate correctly after all checks have been carried out, pleased contact;

B&S Commercial Kitchens Pty Ltd
57 Plateau Road
Reservoir VIC 3073
Tel.: + 61 3 9469 4754 Fax.: + 61 3 9469 4504 E-mail: info@bscommercialkitchens.com

Operating Instructions

WARNING!

- **DO NOT** spray aerosols in the vicinity of this appliance while it is in operation.
- **DO NOT** store or use flammable liquids or items in the vicinity of this appliance.
- Prior to lighting, smell the area surrounding the appliance for gas (please note that as some gas types are heavier than air, we recommend the operator to also smell the floor around the appliance)
- In the event you smell gas: **DO NOT** light any appliance. **DO NOT** touch/operate any electrical switch or phone in your building. Call the local gas supplier **immediately** and follow their instructions

IMPORTANT WARNING!

WHEN USING GRIDDLE HOT PLATE FOR FIRST TIME, PLEASE ENSURE THE GRILL PLATE IS CLEANED USING WARM SOAPY WATER TO ENSURE ALL PROTECTIVE OILS APPLIED DURING THE PRODUCTION PROCESS ARE REMOVED, OTHERWISE FOOD CONTAMINATION MAY OCCUR. REPEAT IF NECESSARY

WHEN USING CHAR GRILL FOR FIRST TIME, PLEASE ENSURE THE CHAR GRILL IS CLEANED USING WARM SOAPY WATER TO ENSURE ALL PROTECTIVE OILS APPLIED DURING THE PRODUCTION PROCESS ARE REMOVED, OTHERWISE FOOD CONTAMINATION MAY OCCUR. REPEAT IF NECESSARY

ENSURE NO OR MINIMAL AMOUNTS OF OIL AND FOODSTUFFS FALL INTO THE BURNER AREA WHILST COOKING. PAILURE TO DO SO MAY AFFECT THE EFFICIENT AND SAFE OPERATION ON THE APPLIANCE AND MAY AVOID WARRANTY.

Figure 2: Knowing Your Appliance

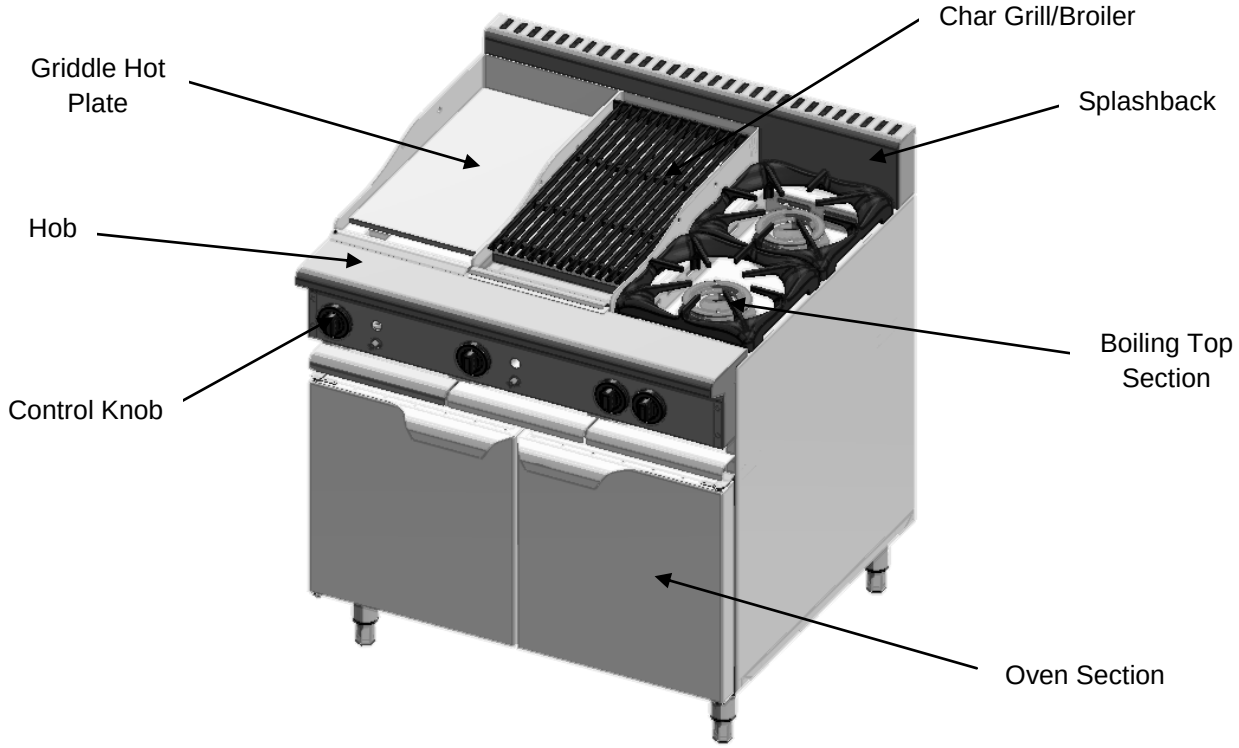

Figure 3: Control Panel – Boiling Top

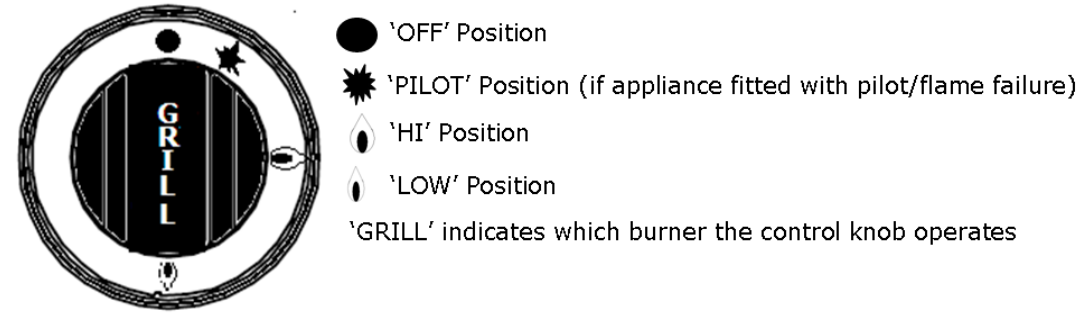

● Marking located above control knob indicates settings prescribed above when vertically aligned with icons above.

Boiling Top Lighting Instructions

Models with Pilot and/or Flame Failure

1. Ensure the control knob is in the 'OFF' position. If not, turn control knob clockwise until it is in the 'OFF' position.
2. Push knob, and turn knob anti-clockwise to 'PILOT' position. (Ignite rear burners first to reduce risk of injury).
3. Whilst keeping the knob pushed in, light pilot.
4. Continue to hold the knob for 30 seconds after the flame appears on the plot. Release the knob. The pilot should remain lit. **If pilot fails to remain lit, push down the control knob and turn clockwise to the 'OFF' position. Wait for five minutes before attempting to re-light (repeat steps 1-4).**
5. Once pilot lit, push down and slowly turn the knob anti-clockwise to the 'HIGH' position.
6. Adjust the size of the flame as required by turning knob anti-clockwise.

Models without flame failure

1. Ensure the control knob is in the 'OFF' position. If not, turn control knob clockwise until it is in the 'OFF' position.

2. Push knob, and turn knob anti-clockwise to 'LO' position.
3. Whilst keeping the knob pushed in, light burner. **If burner fails to light, push down the control knob and turn clockwise to the 'OFF' position. Wait for five minutes before attempting to re-light (repeat steps 1-3).**
4. Adjust the size of the flame as required by turning knob clockwise.

Boiling Top Shutdown Procedures

Models with Pilot and/or Flame Failure

1. To turn burner off, turn knob clockwise to the 'OFF' position.
2. To turn burner off whilst keeping pilot lit, turn knob clockwise to the 'PILOT' position.
3. To turn pilot off, turn knob clockwise to 'OFF' position.

NOTE: Do not allow a period greater than 5 seconds to elapse between steps 2-3 for the following instructions.

Models without flame failure

1. To turn burner off, turn knob clockwise to 'OFF' position.

Figure 4: Control Panel – Grill Plate / Char Grill

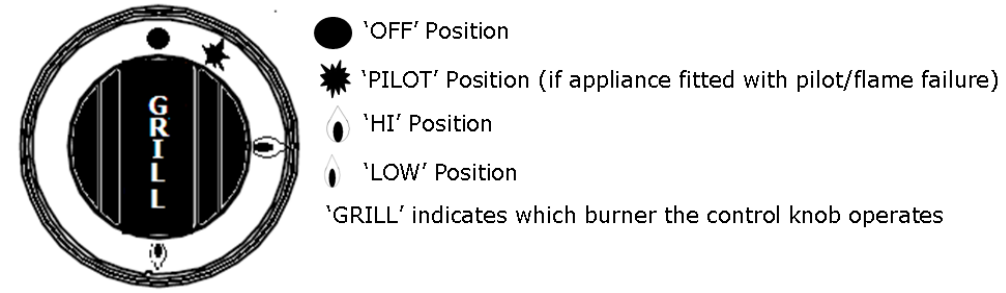

● Marking located above control knob indicates settings prescribed above when vertically aligned with icons above.

Char Grill/Broiler Lighting Instructions

1. Select appropriate knob. Ensure the control knob is in the 'OFF' position. If not, turn control knob clockwise until it is in the 'OFF' position.
2. Push knob, and turn knob anti-clockwise to 'PILOT' position.
3. Whilst keeping the knob pushed in, press and release piezo ignition three to four times to ignite pilot.
4. Continue to hold the knob for 30 seconds after the flame appears on the pilot. Release the knob. The pilot should remain lit. Confirm pilot is lit by looking up between the front control panel and spillage tray. **If pilot fails to remain lit, push down the control knob and turn clockwise to the 'OFF' position. Wait for five minutes before attempting to re-light (repeat steps 1-4).**
5. Once pilot lit, push down and slowly turn the knob anti-clockwise to the 'HIGH' position.
6. Adjust the size of the flame as required by turning knob anti-clockwise.
7. To turn burner off whilst keeping pilot lit, turn knob clockwise to the 'PILOT' position.

Char Grill/Broiler Shutdown Procedure

1. To turn pilot "OFF", turn knob clockwise to 'OFF' position.
2. Ensure main burner and pilot are extinguished.

Griddle Hot Plate Lighting Instructions

1. Select appropriate knob. Ensure the control knob is in the 'OFF' position. If not, turn control knob clockwise until it is in the 'OFF' position.
2. Push knob, and turn knob anti-clockwise to 'PILOT' position.
3. Whilst keeping the knob pushed in, press and release piezo ignition three to four times to ignite pilot.
4. Continue to hold the knob for 30 seconds after the flame appears on the pilot. Release the knob. The pilot should remain lit. Confirm pilot is lit by looking up between the front control panel and spillage tray. **If pilot fails to remain lit, push down the control knob and turn clockwise to the 'OFF' position. Wait for five minutes before attempting to re-light (repeat steps 1-4).**
5. Once pilot lit, push down and slowly turn the knob anti-clockwise to the 'HIGH' position.
6. Adjust the size of the flame as required by turning knob anti-clockwise.
7. To turn burner off whilst keeping pilot lit, turn knob clockwise to the 'PILOT' position.

Griddle Hot Plate Shutdown Procedure

1. To turn pilot "OFF", turn knob clockwise to 'OFF' position.
2. Ensure main burner and pilot are extinguished.

Oven Section

A. Turn oven control knob to the pilot position

B. Depress knob and at the same time press the piezo igniter to light the pilot. For first time operation this process may need to be repeated several times

C. Once pilot is established continue to keep the knob depressed for at least 30 seconds.

D. Turn knob to desired temperature setting.

E. When cooking is finished the oven control knob can be turned back to the pilot position until the next cook or if desired the pilot can be turned off by turning the knob back to the off position.

Maintenance and Care

To ensure longevity and continued performance efficiency of you appliance, a good cleaning and maintenance program is paramount. In general the use of steel wool, abrasive cloths/cleansers/powders **should not** be used to clean this appliance

Daily Checks & Service

Boiling Top

- Look for any foreign materials in burner area, leaks, damaged knobs and any other signs that the wok table is not ready and safe for operation. Inspect burner area and ensure pilots are in position near the burner, and that the pilot flame when ignited is blue in color and approximately 20-40mm in length. If fitted with thermocouple ensure pilot flame is in contact with it. Call the manufacturer if you see any problems. Always ensure that area surrounding pilot and thermocouple is clear of any fats, oils or foodstuffs.
- Clean the exterior surfaces of the appliance with a clean, damp cloth soaked with mild detergent to remove any food stuffs, oils, dust and any other materials.
- Ensure the primary water drain (located in gutter) is cleared of any food stuffs during operation of the appliance and on completion of use of the appliance.
- The spillage trays located under the main body of the appliance should be removed (by pulling out) and any carbonised foodstuffs and oils should be removed using a clean, damp cloth soaked in a mild detergent.

Char Grill/Broiler

- Look for any foreign materials in burner area, leaks, damaged knobs and any other signs that the char grill is not ready and safe for operation.
- Inspect burner area and ensure pilots are in position near the burner, and that the pilot flame when ignited is blue in color and approximately 10-20mm in length. Ensure pilot flame is in contact with thermocouple.
- Call the manufacturer if you see any problems.
- Always ensure that area surrounding pilot and thermocouple is clear of any fats, oils or foodstuffs.
- Clean the stainless steel surfaces of the char grill table with a clean, damp cloth soaked with mild detergent to remove any food stuffs, oils, dust and any other materials. The spillage tray located at the front of the char grill grates should be removed (by pulling up and out) and any carbonised foodstuffs and oils should be removed using a clean, damp cloth soaked in a mild detergent.
- Char grill grates should always be cleaned to avoid tainting of food. Scrape clean between each batch of product (particularly when foods are dissimilar) towards the waste gutter at the front of the plate, and into the collection drain located in the centre of the gutter.
- The spillage tray located under the control knobs should be removed (by pulling out) and any carbonised foodstuffs and oils should be removed using a clean, damp cloth soaked in a mild detergent.

Griddle Hot Plate

- Look for any foreign materials in burner area, leaks, damaged knobs and any other signs that the grill plate is not ready and safe for operation.
- Inspect burner area and ensure pilots are in position near the burner, and that the pilot flame when ignited is blue in color and approximately 10-20mm in length. If fitted with thermocouple ensure pilot flame is in contact with it. Call the manufacturer if you see any problems.
- Always ensure that the area surrounding pilot and thermocouple is clear of any fats, oils or foodstuffs.
- Clean the stainless steel surfaces of the griddle plate table with a clean, damp cloth soaked with mild detergent to remove any food stuffs, oils, dust and any other materials.
- The spillage tray located under the control knobs should be removed (by pulling out) and any carbonised foodstuffs and oils should be removed using a clean, damp cloth soaked in a mild detergent.
- Griddle Hot plate should always be cleaned to avoid tainting of food. Scrape clean between each batch of product (particularly when foods are dissimilar) towards the waste gutter at the front of the plate, and into the collection drain located in the centre of the gutter.

Oven

- Wipe out inside of oven
- Check and clean away any spills that may accumulate over burner covers

Fortnightly Checks & Service

Clean Boiling Table Trivets and Burners

- Remove trivets and soak in hot water wild a mild detergent for a period of one hour. Ensure trivets are dried prior to replacing on appliance.
- To clean burners, firstly remove trivets and gently remove the upper lid of burner by gently by pulling up. Soak upper lid in hot water wild a mild detergent for a period of one hour. Ensure burner lids are dried prior to replacing onto lower part of burner. While upper lid is soaking, clean lower part of burner with a clean damp cloth soaked in a mild detergent.

Clean Char Grill/Broiler Grates and Burners

- Remove char grill grates and soak in hot water with a mild detergent for a period of one hour. Ensure grates are dried prior to replacing on appliance.
- To clean burners, firstly remove char grill grates and gently remove the volcanic rock support tray. Remove burner locking pin located under char grill burner, lift burner from the rear and pull towards the splashback.
- Soak burner in hot water wild a mild detergent for a period of one hour. Ensure burners are dried

prior to replacing

Yearly Checks & Service

- **The appliance should be inspected and adjusted periodically by a qualified service person as part of any kitchen maintenance program.**
- **B&S recommends that this appliance is inspected at least annually by a authorized service technician as follows:**
  - Inspect the table inside-out for excessive build-up of any fats, oils and foodstuffs.
  - Inspect that the burners and other components (i.e. pilots, thermocouples, etc.) are in good condition and functioning properly.
  - Inspect all gas connections for leaks and ensure all connections are tightened properly.
  - Ensure burner manifold pressure is in accordance with that specified on the data plate of the appliance.
  - Inspect all gas connections for leaks and ensure all connections are tightened properly.

In case of difficulties contact B&S Commercial Kitchen Appliances Pty Ltd or their authorised service agent.

Servicing Instructions

WARNING!

- Servicing shall be carried out by authorised personnel **only**. Failure to do so will void the B&S warranty and may result in damage to equipment or injury to personnel.
- Before commencing any disassembly/assembly of gas controls, please ensure the gas supply is turned off (isolated).

FAILURE TO DO SO WILL VOID THE B&S WARRANTY AND MAY RESULT IN DAMAGE TO EQUIPMENT OR INJURY TO PERSONNEL.

Abnormal Operation

Any of the following are considered to be abnormal operation and may require servicing;

- Incomplete ignition of burner/Burner failing to keep alight.
  - Check burner is not blocked
- Yellow tipping of the burner flame.
  - Check aeration of burner
- Gas valves which are difficult to turn.
- Burner failing to keep alight.

Gaining access to gas system – Boiling Top Section

1. To gain access to boiling top burners and pilot assembly, lift off trivets. **Note:** Use extreme care when lifting off trivets as they may still be hot from appliance operation.
2. To adjust aeration of burners. To adjust front row boiling top burners, remove front burners by lifting the burner at the rear, and then slowly pulling it towards the splashback (rear) of the appliance off the injector. Adjust the interrupter screw located at the top end of the venturi section as required (Clockwise: more interruption, Anti-clockwise: Less interruption). To adjust back row boiling top burners, remove rear burners by lifting the burner at the rear, and then slowly pulling it towards the splashback (rear) of the appliance off the injector. Adjust the interrupter screw located at the top end of the venturi section as required (Clockwise: more interruption, Anti-clockwise: less interruption). Reassemble in reverse order

3. To replace or to service gas cocks, remove the front panel by pulling off the control knobs and undoing the screws located on either side and at the top of the front panel. Pull off panel. Remove burners as described under 2 above.
    a. *For models with no thermocouple and pilot light*
        i. Undo union nut connecting gas cock to manifold located at the top of gas cock.
        ii. *For models with pilot light only.*
        iii. Follow steps as per *3. i.* then undo nut attached to flexible tubing connecting pilot light outlet on gas cock to pilot light.
        iv. *For models with pilot light and thermocouple*
        v. Follow steps as per *3. ii.* then undo nut attaching thermocouple to gas cock located at the rear of the gas cock.
4. Gently remove gas cock from spigot. Reassemble in reverse order.
5. The pilot light located on the RHS of the burner can be removed from the gas cock as under 3 ii, and then unscrewing the nut under the pilot located on the pilot assembly bracket.
6. The thermocouple can be removed from the gas cock as under 3 iii, and then unscrewing nut under the thermocouple bulb located on the pilot assembly bracket.
7. Replace in reverse order.

Gaining Access to Gas Components – Grill Plate

1. To gain access to griddle plate burners and pilot assembly, and gas cocks, remove front panel.
2. To remove front panel;
    a. Remove the front panel by pulling off the control knobs and undoing the screws located on either side and at the top of the front panel.
    b. Slowly lift panel forward and remove piezo ignition lead from piezo control by gently pulling lead out of piezo control.
    c. Lift panel off by pulling forward.
    d. To replace panel, REASSEMBLE IN RVERSE ORDER.

Replacing/Servicing Gas Cocks, Thermocouples, Piezo Ignition, Pilot and Burner – Grill Plate

1. To replace or to service gas cocks, remove the front panel as described under 2 above.
    a. Undo union nut connecting gas cock to manifold located at the top of gas cock.
    b. Undo nut attached to flexible tubing connecting pilot light outlet on gas cock to pilot light.
    c. Undo nut attaching thermocouple to gas cock located at the rear of the gas cock.
    d. Undo nut attaching burner gas hose to gas cock located on the right of the gas cock.
    e. Gently remove gas cock from spigot.
    f. REASSEMBLE IN REVERSE ORDER.
2. The pilot light assembly located on the RHS of the burner can be removed from the gas cock as under 3.
    a. Unscrew the wing-nut under the pilot assembly located on the pilot assembly bracket, and gently pull forward.
    b. Unscrew the nut under the pilot located on the pilot assembly bracket.
    c. REASSEMBLE IN REVERSE ORDER.
3. Should the ignition fail, check the following:
    a. The thermocouple is in the pilot flame. The thermocouple must be hot in order to generate power to operate the gas cock magnet.
    b. The thermocouple is operating. To lift the magnet, it should be generating approximately 650millivolts. If not functioning correctly, it should be replaced.
    c. Check magnet for sticking and/or correct seating. If faulty, replace. Should the gas cock need to be placed, ask for part number: Bromic 21S-B.If pilot needs to be replaced, ask for part number: SIT Delta Pilot 034. If thermocouple needs to be replaced, ask for part number: SIT Target Thermocouple 014.
4. To remove burner;
    a. Follow step as per 3, undo wing-nuts located under burner support bar.

b. Gently lift burner up, tilt forward and pull out.
c. REASSEMBLE IN REVERSE ORDER.

Gaining Access to Char Grill Burner

1. To gain access to char grill burner;
   a. Remove char grill grate from appliance by lifting and pulling towards the front of the appliance.
   b. Slowly lift volcanic rock tray upwards (volcanic rocks may be removed from tray for greater ease in removing rock tray) and remove towards from the font of the appliance.
   c. Remove burner locking pin located under the burner support bar at the rear of the burner.
   d. Lift rear part of the burner gently and pull towards the splashback of the appliance.
   e. REASSEMBLE IN REVERSE ORDER

Adjusting Burner Aeration – Char Grill

1. Access burner as under 1 above.
   a. Loosen screw of butterfly valve at the inlet and adjust
   b. REASSEMBLE IN REVERSE ORDER

Replacing/Servicing Gas Cocks, Thermocouples and Pilot – Char Grill

1. Front panel must be removed. To remove front panel, remove the front panel by pulling off the control knobs and undoing the screws located on either side and at the top of the front panel.
   a. Slowly lift panel forward and remove piezo ignition lead from piezo control by gently pulling lead out of piezo control.
   b. Lift panel off by pulling forward.
   c. REASSEMBLE IN REVERSE ORDER.

2. To replace or to service gas cocks, remove the front panel as described above.
   a. Undo union nut connecting gas cock to manifold located at the top of gas cock.
   b. Undo nut attached to flexible tubing connecting pilot light outlet on gas cock to pilot light.
   c. Undo nut attaching thermocouple to gas cock located at the rear of the gas cock.
   d. Undo nut attaching burner gas hose to gas cock located on the right of the gas cock.
   e. Gently remove gas cock from spigot.
   f. REASSEMBLE IN REVERSE ORDER.

3. The pilot light assembly located on the RHS of the burner can be removed from the gas cock as above.
   a. To access pilot assembly, remove grates and volcanic rock tray as described under 1.
   b. Unscrew the screw holding the pilot assembly.
   c. Unscrew the nut under the pilot located on the pilot assembly bracket.
   d. REASSEMBLE IN REVERSE ORDER

4. Should the ignition fail, check the following:
   a. The thermocouple is in the pilot flame. The thermocouple must be hot in order to generate power to operate the gas cock magnet.
   b. Check the thermocouple is operating (it should be generating approximately 12-13millivolts—closed circuit). If not functioning correctly, it should be replaced).
   c. Check magnet for sticking and/or correct seating. If faulty, replace. Should the gas cock need to be placed, ask for part number: Bromic 21S-B.If pilot needs to be replaced, ask for part number: SIT Delta Pilot 034. If thermocouple needs to be replaced, ask for part number: SIT Target Thermocouple 014.

Gaining Access to Oven Burner and Oven Pilot Burner

1. To remove oven burner
   a. Lift out rear and side Oven heat deflectors.
   b. Lift out the spillage tray.

c. Remove the screws holding the burner in the brackets and remove the burner.
d. If the pilot burner needs cleaning this can also be done at this time by undoing the screw holding the pilot in position, releasing the feed tube nut and then remove the pilot assembly.

Replace Oven Thermostat

1. To remove Oven thermostat

a. Remove control panel as described in replacing gas cocks.
b. Remove right side oven side panel by removing screws at front and rear of panel.
c. Remove the oven capillary tube from the bracket inside the oven and gently feed the capillary out of the oven compartment.
d. Release the inlet and outlet and the pilot connection to the thermostat and remove the thermostat.
e. Replacement is in reverse order.

Replace Oven Thermocouple Lead

1. To remove Oven thermocouple

a. Remove control panel as described in replacing gas cocks.
b. Remove right side oven side panel by removing screws at front and rear of panel.
c. Remove the rear and side oven heat deflectors.
d. Lift out the spillage tray.
e. Remove the screws holding the burner brackets and remove the burner.
f. Release the nut holding the thermocouple into the pilot assemble and feed the thermocouple out the side of the oven.
g. Replacement is in reverse order.

Table 4 : Troubleshooting

FAULT	POSSIBLE CAUSE	CHECKS
Pilot light not igniting	Blockage of pilot	Check pilot injector is not blocked as described in servicing instructions – pilot and flame safeguard
	Adjustment of pressure from flame failure control	Check gas pressure to pilot as described under servicing instructions – adjustments
Pilot light not establishing	Positioning of thermocouple	Check connection of the thermocouple to the control is not loose.
	Faulty thermocouple	Adjust positioning of thermocouple to ensure pilot flame is hitting thermocouple
	Faulty flame failure control valve	Contact manufacturer or authorised service agent
		Contact manufacturer or authorised service agent
Pilot established, main burner not lighting	Faulty thermocouple	Contact manufacturer
	Faulty flame failure control valve	Contact manufacturer
Oven temperature incorrect	Faulty calibration of thermostat	Contact manufacturer or authorised service agent
	Capillary bulb may have been removed from bracket	Clip bulb back into holding bracket

To obtain further service information concerning this appliance, pleased contact;

B&S Commercial Kitchens Pty Ltd
57 Plateau Road
Reservoir VIC 3073
Tel.: + 61 3 9469 4754 Fax.: + 61 3 9469 4504 E-mail: info@bscommercialkitchens.com