VERRO SERIES: VCGR-9
Char Grill 900mm

Project: _____ Item: _____

VCGR-9

Standard Features & Benefits:

- AISI 304 grade stainless steel
- Heavy duty complete stainless steel cabinet frame
- 26MJ cast iron burner per 300mm section
- Heavy duty cast iron J grates
- Multi-setting gas valve as standard allowing for greater regulation of flame setting
- Piezo ignition and flame failure device
- Easy to clean fat spillage trays
- Easy access to all components for servicing and adjustment
- 24 month warranty

Options:

- Castors
- Plinth mounted
- Natural or LP gas

Specifications:

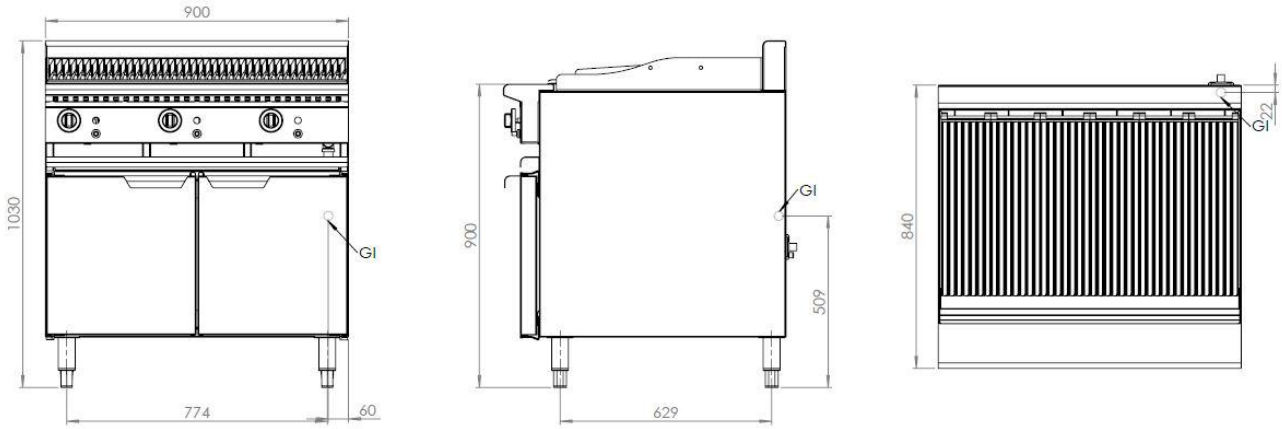

MODEL	LENGTH (mm)	DEPTH (mm)	HEIGHT (mm)	GAS CONSUMPTION (Mj/h)	
				NG	LPG
VCGR-9	900	840	1030	78	86

Connections:

- Gas (GI) : ¾" BSP
- Supply Pressure:
  - NG : 1.0 kPa
  - LPG : 2.6 kPa
- Regulator is included in the unit
- Must be installed by an authorised installer

B+S Commercial Kitchens
57 Plateau Road Reservoir VIC 3073 Australia | +61 3 9469 4754
info@bscommercialkitchens.com | www.bscommercialkitchens.com