Item No. _____

L828

Electric Two-Sided Grill

Model G828 Includes grooved upper platen and lower cooking surface.

Features

One touch menu selection automatically provides accurate TIME, TEMPERATURE, and GAP settings for every product.

Programmable Control

Microprocessor control is programmable for simplified operator operation. Offers flexibility for future menu items and product specification changes at the restaurant level. Customizable to offer multi-stage settings per product, five languages (English, Spanish, French, Russian and Portuguese), standby alert to conserve energy, and four timers that can be used specifically for flat grill cooking.

External USB Port

External USB port allows user access to upload new menu and promotional items. Menu changes can be sent electronically to other store locations saving time and eliminating operator error.

Upper Platen

Upper platen will close automatically to the preset gap setting with the touch of one button. Air cylinder system provides quiet, simple, trouble-free operation of the upper platen. As a safety feature, platen will automatically open at loss of power, or if an obstruction is detected.

Precise Automatic Gapping

Solid platform with 3-point reference plane and fixed (home) reference point. Once programmed, the upper platen automatically achieves accurate and consistent gaps, every time. Precise, repeatable gapping assures product safety and better quality finished product.

Cooking Zone

One zone has three independent heating elements, and two in the upper platen to assure even temperatures and quick recovery.

Side-To-Side Release Material

Protects entire upper platen cooking surface and makes cleaning easy. Improved installation and removal process away from hot surfaces.

Patty Cook Position Placement Guide

Lower cooking surface is etched for a permanent patty placement guide for two-sided cooking.

750 N. Blackhawk Blvd. Rockton, Illinois 61072
800-255-0626
Phone 815-624-8333 Fax 815-624-8000
www.taylor-company.com
info@taylor-company.com

ISO 9001:2008
Registered Firm

Standard 4

LISTED
E84050

Selected 50 Hz. Models

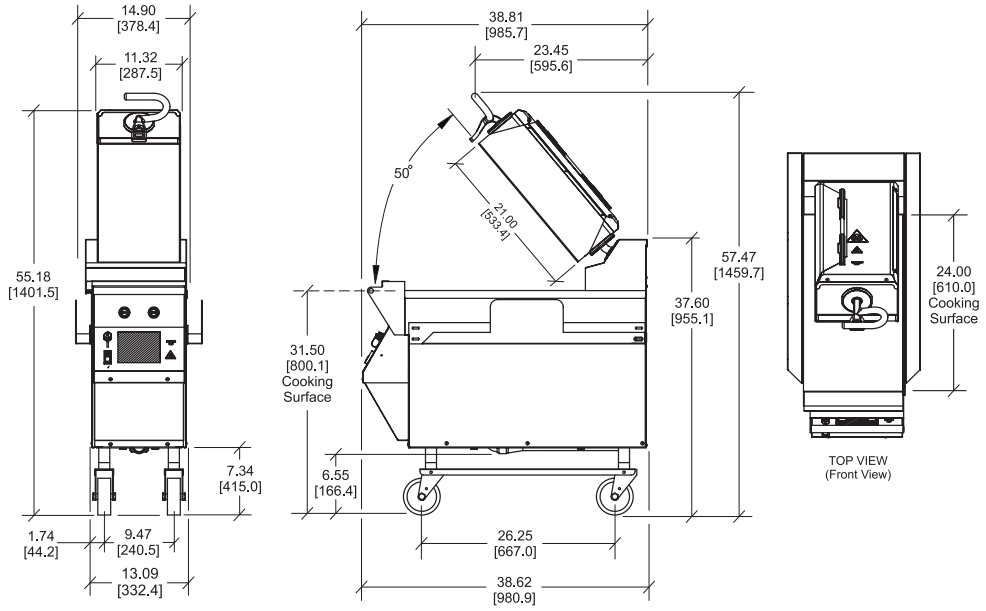

FIGURES IN BRACKETS INDICATE MILLIMETERS / DECIMAL AND FRACTIONAL DIMENSIONS EQUAL TO (PLUS OR MINUS 1/16 INCH [1.5mm]).
MACHINE HEIGHT CAN VARY (PLUS OR MINUS 2.5 INCHES [63.5 MM]) WITH CASTER HEIGHT ADJUSTMENT. GREASE CANS NOT SHOWN.

Weights	**lbs.**	**kgs.**
Net	391/ 448	177.4/ 203.1
Crated	482/ 539	218.6/ 244.3
Net (*international weight)*	486/ 543	220.4/ 246.1
Crated (*international weight)*	577/ 634	261.7/ 287.4

	cu. ft.	**cu. m.**
Volume	35.3	1.00
Dimensions	**in.**	**mm.**
Width	15	381
Depth	38-13/16	986
Height	55 to 58	1397 to 1473
Cooking Surface Height	29 to 32	737 to 813
Floor Clearance	3-11/16 to 6-11/16	93 to 169

Casters may be adjusted.

Electrical	**Amps Per Cord**	**Total kW**	**Cord Supplied with NEMA Plug**
208/60/1	43	9	HBL 360P6W
208/60/3	27	9	NEMA 15-50P
400/50/3N~	14	9	**
200/50/60/3	28	8.3	**

*** Plug supplied by customer*

This unit may be manufactured in other electrical characteristics and may have additional regulatory agency approvals. Consult the local Taylor Distributor for other electrical characteristics and agency approvals based on specific electrical and country requirements.

(For exact electrical information and approval marks, always refer to the data label of the unit.)

Continuing research results in steady improvements; therefore, these specifications are subject to change without notice.

Bidding Specs

Electrical: Volt _____ Hz _____ ph _____

Neutral: ☐Yes ☐No **Cooling**: ☐Air ☐Water ☐NA

Options: _____

Specifications

Electrical

See the Electrical chart for the proper electrical requirements. Manufactured to be permanently connected. Consult your local Taylor distributor for receptacle specifications as local codes allow. Restraining cable included.

Accessories

- Cleaner (1qt)
- Grease cans (Two, mount on each side)
  Minimum clearance from construction:
  Allow for a 34"(86.4cm) minimum aisle width in front of grill for grease can removal.
- Release sheets; includes clips and retainer (one box of 9)
- Squeegee (one)

Options

- Cleaning Pads (10 qty.)
- Cleaning Pad Holder
- Gap Gage (0.255)
- Grill Scraper
- Squeegee
- Tool Holder
- Grooved Upper Platen & Lower Plate

Authorized Taylor Distributor

TAYLOR
United Technologies

750 N. Blackhawk Blvd.
Rockton, Illinois 61072
www.taylor-company.com