OPERATOR'S
MANUAL

Model 810, 812, 820, 822, 828 Series
Auto Lift Grills

Original Operating Instructions

073523-M

9/15/10 (Original Publication)
(Updated 8/10/15)

Complete this page for quick reference when service is required:

Taylor Distributor:_____

Address:_____

Phone:_____

Service:_____

Parts:_____

Date of Installation:_____

Information found on data plate:

Model Number:_____

Serial Number:_____

Electrical Specs: Voltage_____Cycle_____

Phase_____

Maximum Fuse Size:_____Amps

Minimum Wire Ampacity:_____Amps

Part Number:_____

© 2010 Carrier Commercial Refrigeration, Inc.
073523-M
Any unauthorized reproduction, disclosure, or distribution of copies by any person of any portion of this work may be a violation of Copyright Law of the United States of America and other countries, could result in the awarding of Statutory Damages of up to $250,000 (17 USC 504) for infringement, and may result in further civil and criminal penalties. All rights reserved.

Taylor Company
a division of Carrier Commercial Refrigeration, Inc.
750 N. Blackhawk Blvd.
Rockton, IL 61072

Table of Contents

Section 1 To the Installer 1

Installer Safety 1

Site Preparation 1

Electrical Connections 1

Installation 2

Ventilation and Clearance 2

Grease Disposal Container 2

Section 2 To the Operator 3

Section 3 Safety 4

Section 4 Operator Parts Identification 6

L810 / G810 Exploded View 6

L812 Exploded View 7

L820 / G820 Exploded View 8

L822 Exploded View 9

L828 / G828 Exploded View 10

Accessories Supplied With Grill 11

Optional Accessories Available From Local Taylor Distributor 12

Section 5 Important: To the Operator 13

Section 6 Operating Procedures 14

Daily Opening Procedures 14

Loading Store Menu Items To USB 21

Loading Menu Items From USB 22

Operating Procedures 24

Daily Cleaning Procedures 28

Section 7 **Troubleshooting Guide** **37**

Section 8 **Limited Warranty on Equipment** **42**

Section 9 **Limited Warranty on Parts** **45**

Note: Continuing research results in steady improvements; therefore, information in this manual is subject to change without notice.

Note: Only instructions originating from the factory or its authorized translation representative(s) are considered to be the original set of instructions.

© 2010 Carrier Commercial Refrigeration, Inc. (Original Publication)
(Updated August, 2015)
073523-M
Any unauthorized reproduction, disclosure, or distribution of copies by any person of any portion of this work may be a violation of Copyright Law of the United States of America and other countries, could result in the awarding of Statutory Damages of up to $250,000 (17 USC 504) for infringement, and may result in further civil and criminal penalties.
All rights reserved.

Taylor Company
a division of Carrier Commercial Refrigeration, Inc.
750 N. Blackhawk Blvd.
Rockton, IL 61072

Section 1 To the Installer

The following information has been included in the manual as safety and regulatory guidelines. For complete installation instructions, please see the Installation Checklist.

Installer Safety

In all areas of the world, equipment should be installed in accordance with existing local codes. Please contact your local authorities if you have any questions.

Care should be taken to ensure that all basic safety practices are followed during the installation and servicing activities related to the installation and service of Taylor equipment.

- Only Taylor authorized service personnel should perform installation and repairs on the equipment.
- Authorized service personnel should consult OSHA Standard 29CFRI910.147 or the applicable code of the local area for the industry standards on lockout/tagout procedures before beginning any installation or repairs.
- Authorized service personnel must ensure that the proper PPE is available and worn when required during installation and service.
- Authorized service personnel must remove all metal jewelry, rings, and watches before working on electrical equipment.

The main power supply(s) to the equipment must be disconnected prior to performing any repairs. Failure to follow this instruction may result in personal injury or death from electrical shock or hazardous moving parts as well as poor performance or damage to the equipment.

Note: All repairs must be performed by an authorized Taylor Service Technician.

This unit has many sharp edges that can cause severe injuries.

Site Preparation

Review the area where the unit will be installed before uncrating the unit. Make sure all possible hazards to the user or equipment have been addressed. Fill out the store survey form.

Electrical Connections

The grill is supplied with one or more power cords. Check the data plate on the grill for voltage, cycle, phase and electrical specifications. Refer to the wiring diagram provided inside the protective control panel door at the front of the grill for proper power connections. The power connection(s) are located behind the access line cover on the front of the grill.

In the United States, this equipment is intended to be installed in accordance with the National Electrical Code (NEC), ANSI/NFPA 70-1987. The purpose of the NEC code is the practical safeguarding of persons and property from hazards arising from the use of electricity. This code contains provisions considered necessary for safety. Compliance therewith, and proper maintenance, will result in an installation essentially free from hazard!

In all other areas of the world, equipment should be installed in accordance with the existing local codes. Please contact your local authorities.

The Proper Wire Size and Branch Circuit Overcurrent Device shall be selected according to the data label information and in accordance with CEC Part I 2006, Section 14-100(e)(i).

FOLLOW YOUR LOCAL ELECTRICAL CODES!

CAUTION: THIS EQUIPMENT MUST BE PROPERLY GROUNDED! FAILURE TO DO SO CAN RESULT IN SEVERE PERSONAL INJURY FROM ELECTRICAL SHOCK!

This unit is provided with an equipotential grounding lug that is to be properly attached to the rear of the frame by the authorized installer. The installation location is marked by the equipotential bonding symbol (5021 of IEC 60417-1) on both the removable panel and the equipment's frame.

- Stationary appliances which are not equipped with a power cord and a plug or another device to disconnect the appliance from the power source must have an all-pole disconnecting device with a contact gap of at least 3 mm installed in the external installation.
- Appliances that are permanently connected to fixed wiring and for which leakage currents may exceed 10 mA, particularly when disconnected or not used for long periods, or during initial installation, shall have protective devices such as a GFI, to protect against the leakage of current, installed by the authorized personnel to the local codes.
- Supply cords used with this unit shall be oil-resistant, sheathed flexible cable not lighter than ordinary polychloroprene or other equivalent synthetic elastomer-sheathed cord (Code designation 60245 IEC 57) installed with the proper cord anchorage to relieve conductors from strain, including twisting, at the terminals and protect the insulation of the conductors from abrasion.

  If the supply cord is damaged, it must be replaced by an authorized Taylor service technician in order to avoid a hazard.

Installation

WARNING: Improper installation, adjustment, alteration, service or maintenance can cause property damage, injury or death. Read the installation, operating and maintenance instructions thoroughly before installing or servicing this equipment.

This machine is designed for indoor use only.

DO NOT install the machine in an area where a water jet could be used to clean or rinse the machine. Failure to follow this instruction may result in serious electrical shock.

This grill must be installed on a level surface. Failure to comply may result in personal injury or equipment damage.

Installation of Cable Kit

If the unit is permanently connected, the Cable Kit must be installed. Flexible conduit must be used when installing the appliance.

Ventilation and Clearance

To ensure proper operation of this appliance, it must be installed so that the products of combustion are efficiently removed.

After set up, do not store anything on top of the grill. Failure to follow this instruction may result in a fire hazard.

Grease Disposal Container

If the grill is not factory-equipped with grease disposal containers, the store is required to provide appropriate grease disposal containers in accordance with NSF Standard 4 requirements.

Section 2 To the Operator

The Taylor grills included in this manual consist of the base model numbers 810, 812, 820, 822, and 828.

Prefix letters were added to the base model numbers to denote minor design differences:

L = Platen Length (21” / 533 mm)
G = Grooved Option

The Models 810 and 812 are 36” (914 mm) grills. The Model 810 is equipped with three upper platens and the Model 812 is equipped with two upper platens.

The Models 820 and 822 are 24” (610 mm) grills. The Model 820 is equipped with two upper platens and the Model 822 is equipped with one upper platen.

The Model 828 is a 12” (305 mm) grill equipped with one upper platen.

These grills are capable of cooking a variety of products and feature two cooking options. They provide all the features of a flat grill as well as the advantages of two-sided cooking.

The grill you have purchased has been carefully engineered and manufactured to provide dependable operation. When properly operated and maintained, it will produce a consistent quality product. Like all mechanical products, it will require cleaning and maintenance. A minimum amount of care and attention is necessary if the operating procedures in this manual are followed closely.

This Operator's Manual should be read before operating or performing any maintenance on your equipment.

It is strongly recommended that all personnel responsible for the equipment's operation and cleaning review these procedures for proper training and assurance that no misunderstandings exist.

In the event you should require technical assistance, please contact your local authorized Taylor Distributor.

Note: Your Taylor warranty is valid only if the parts are authorized Taylor parts, purchased from the local authorized Taylor Distributor, and only if all required service work is provided by an authorized Taylor service technician. Taylor reserves the right to deny warranty claims on units or parts if non-Taylor approved parts or incorrect refrigerant were installed in the unit, system modifications were performed beyond factory recommendations, or it is determined that the failure was caused by abuse, misuse, neglect, or failure to follow all operating instructions. For full details of your Taylor Warranty, please see the Limited Warranty section in this manual.

Note: Constant research results in steady improvements; therefore, information in this manual is subject to change without notice.

If the crossed out wheeled bin symbol is affixed to this product, it signifies that this product is compliant with the EU Directive as well as other similar legislation in effect after August 13, 2005. Therefore, it must be collected separately after its use is completed and cannot be disposed as unsorted municipal waste.

The user is responsible for returning the product to the appropriate collection facility, as specified by your local code.

For additional information regarding applicable local laws, please contact the municipal facility and/or local distributor.

Section 3 Safety

We, at Taylor Company, are concerned about the safety of the operator when he or she comes in contact with the grill and its parts. Taylor has gone to extreme efforts to design and manufacture built-in safety features to protect both you and the service technician. As an example, warning labels have been attached to the grill to further point out safety precautions to the operator.

IMPORTANT - Failure to adhere to the following safety precautions may result in severe personal injury or death. Failure to comply with these warnings may damage the machine and its components. Component damage will result in part replacement expense and service repair expense.

To Operate Safely:

DO NOT operate the grill without reading this operator's manual. This manual should be kept in a safe place for future reference.

This appliance is to be used only by trained personnel. It is not intended for use by children or people with reduced physical, sensory, or mental capabilities, or lack of experience and knowledge, unless given supervision or instruction concerning the use of the appliance by a person responsible for their safety. Children should be supervised to ensure that they do not play with the appliance.

USE EXTREME CAUTION while setting up, operating, and cleaning the grill. Failure to follow these instructions can result in burn injuries.

- Avoid coming in contact with hot grill surfaces or with hot grease.
- **DO NOT** prepare or remove product without proper equipment.
- **DO NOT** allow untrained personnel to operate this grill.

Failure to follow the instructions below may result in severe injury or death from electrocution:

- **DO NOT** operate the grill unless it is properly grounded.
- **DO NOT** operate the grill with larger fuses than specified on data label.
- **DO NOT** operate the grill unless all service panels and access doors are attached with screws.
- All repairs must be performed by an authorized Taylor service technician.
- Main power supplies to grill must be disconnected prior to performing any repairs.
- For Cord Connected Units: Only Taylor authorized service technicians or licensed electricians may install a plug or replacement cord on these units.
- Stationary appliances which are not equipped with a power cord and a plug or other device to disconnect the appliance from the power source must have an all-pole disconnecting device with a contact gap of at least 3 mm installed in the external installation.
- Appliances that are permanently connected to fixed wiring and for which leakage currents may exceed 10 mA, particularly when disconnected or not used for long periods, or during initial installation, shall have protective devices such as a GFI, to protect against the leakage of current, installed by the authorized personnel to the local codes.
- Supply cords used with this unit shall be oil-resistant, sheathed flexible cable not lighter than ordinary polychloroprene or other equivalent synthetic elastomer-sheathed cord, (Code designation 60245 IEC 57), installed with the proper cord anchorage to relieve conductors from strain, including twisting, at the terminals and protect the insulation of the conductors from abrasion. If the supply cord is damaged, it must be replaced by the manufacturer, its service agent, or similarly qualified person, in order to avoid a hazard.

130211

IMPORTANT: DO NOT use a water jet or spray excessive water on or anywhere near the grill. Failure to follow this instruction may result in serious electrical shock and cause permanent electrical and mechanical damage to internal parts.

Failure to follow this instruction may result in:

- serious electrical shock
- burns from hot steam
- liquid collecting inside the grill and destroying electrical components

DO NOT use cold water or ice to cool the upper platen or the lower cook surface. Failure to follow this instruction may result in:

- serious electrical shock
- burns from hot steam
- liquid collecting inside the grill and destroying electrical components

Take caution to protect eyes, lungs, and all parts of the body from potential harm when using any chemical cleaner. Failure to follow this instruction may result in a chemical burn.

DO NOT use any abrasives or cleaners other than approved food service cleaners and degreasers. Failure to comply may cause illness to the consumer and may also damage grill surfaces.

This grill must be installed on a level surface. Failure to comply may result in personal injury or equipment damage.

For thorough cleaning, the grill must be pulled away from the wall. Before moving the grill, remove the grease cans. Turn off the gas at the quick connect shut-off valve on the flexible hose. Disconnect the gas quick connector. Disconnect the tether to the grill, located on the back panel of the unit.
To return the grill to its original position, reverse the steps. Use extreme caution to smoothly and slowly roll the grill backward into place.

Failure to do so may cause the grill to tip and can result in severe equipment damage or personal injury.

Cleaning and sanitizing schedules are governed by your state or local regulatory agencies and must be followed accordingly. Please refer to the cleaning section of this manual for the proper procedure to clean this unit.

Access to the service area of the unit is restricted to persons having knowledge and practical experience with the appliance, in particular as far as safety and hygiene are concerned.

NOTICE all warning labels that have been attached to the grill to further point out safety precautions to the operator.

This piece of equipment is made in America and has American sizes on hardware. All metric conversions are approximate and vary in size.

NOISE LEVEL: Airborne noise emission does not exceed 70 dB(A) when measured at a distance of 1.0 meter from the surface of the machine and at a height of 1.6 meters from the floor.

These instructions are valid only if the country code symbol appears on the appliance. If the symbol does not appear on the appliance, refer to the technical instructions which give the necessary instructions for adapting the appliance to the utilization conditions of that country.

Section 4 Operator Parts Identification

L810 / G810 Exploded View

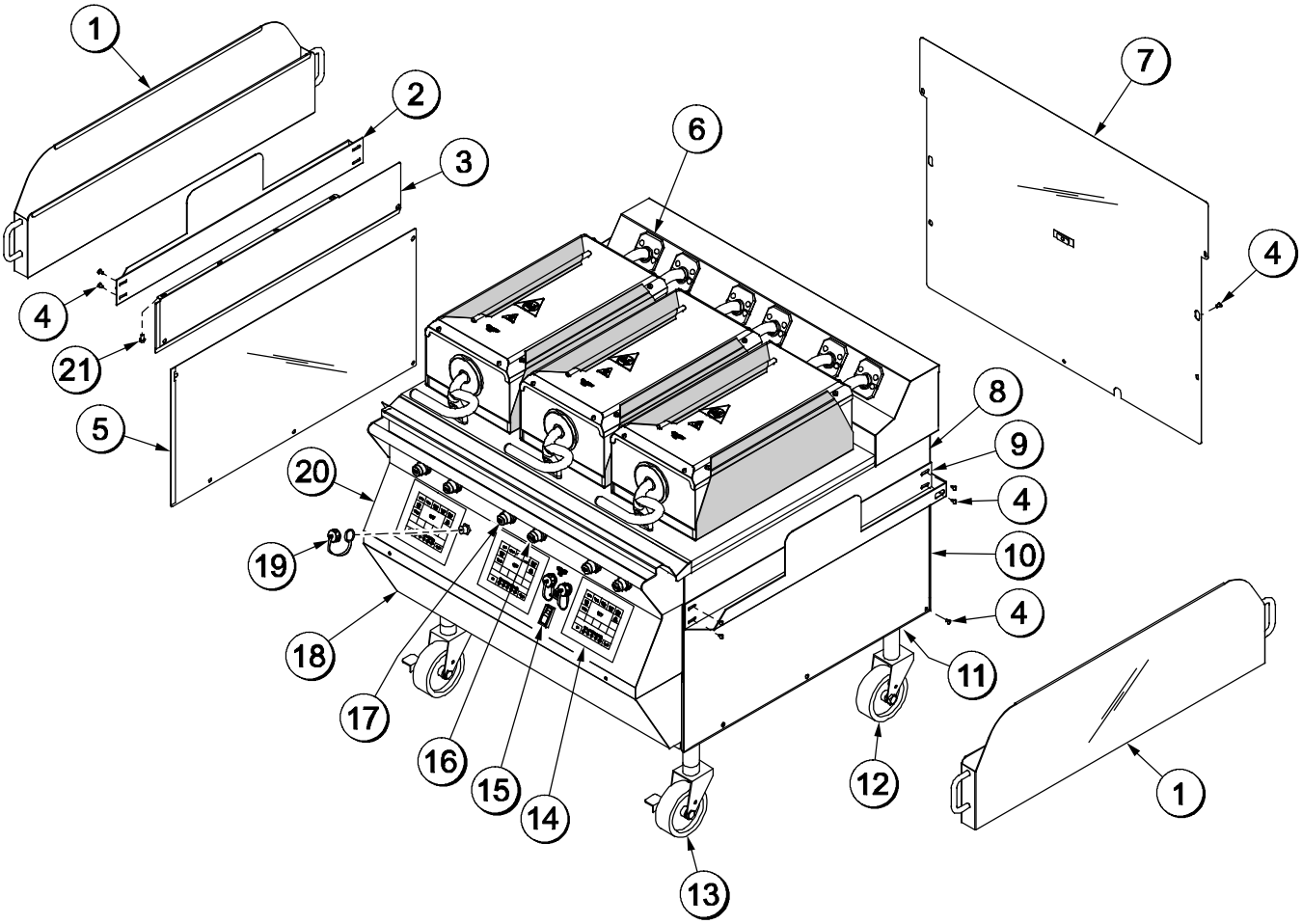

Figure 1

ITEM	DESCRIPTION	PART NO.
1	CAN A.-GREASE	X80925
2	SLIDE A.-CAN GREASE LEFT	X83854
3	PANEL-SIDE-UPPER *LEFT	073990
4	SCREW-10-32X3/8 SLTD TRUS	024298
5	PANEL-SIDE-LOWER *LEFT	073992
*6	KIT A.-GREASE SHIELD	X78330-SER
7	PANEL A.-BACK SERVICE	X73995
8	PANEL-SIDE-UPPER *RIGHT	073989
9	SLIDE A.-CAN GREASE RIGHT	X83853
10	PANEL-SIDE-LOWER *RIGHT	073991
11	NUT-JAM 1 1/2-12 STEEL	073594

ITEM	DESCRIPTION	PART NO.
12	CASTER-5" 7-5/8 STEM	078377
13	CASTER-GRILL 5” LOCK	073240
14	KIT A.-GRILL CONTROL	X73474-SER
15	SWITCH-ROCKER-DPST-10A	076989-WP
16	BUTTON-OPERATOR-BLACK	076012
17	BUTTON-OPERATOR-RED	076011
18	PANEL A.-FRONT-LOWER	X73979
19	COVER A. USB WATERPROOF	068583
20	PANEL A.-LIGHT	X73983
21	SCREW 10-32 X 3/8	039381

* 1 KIT PER PLATEN

150114

L812 Exploded View

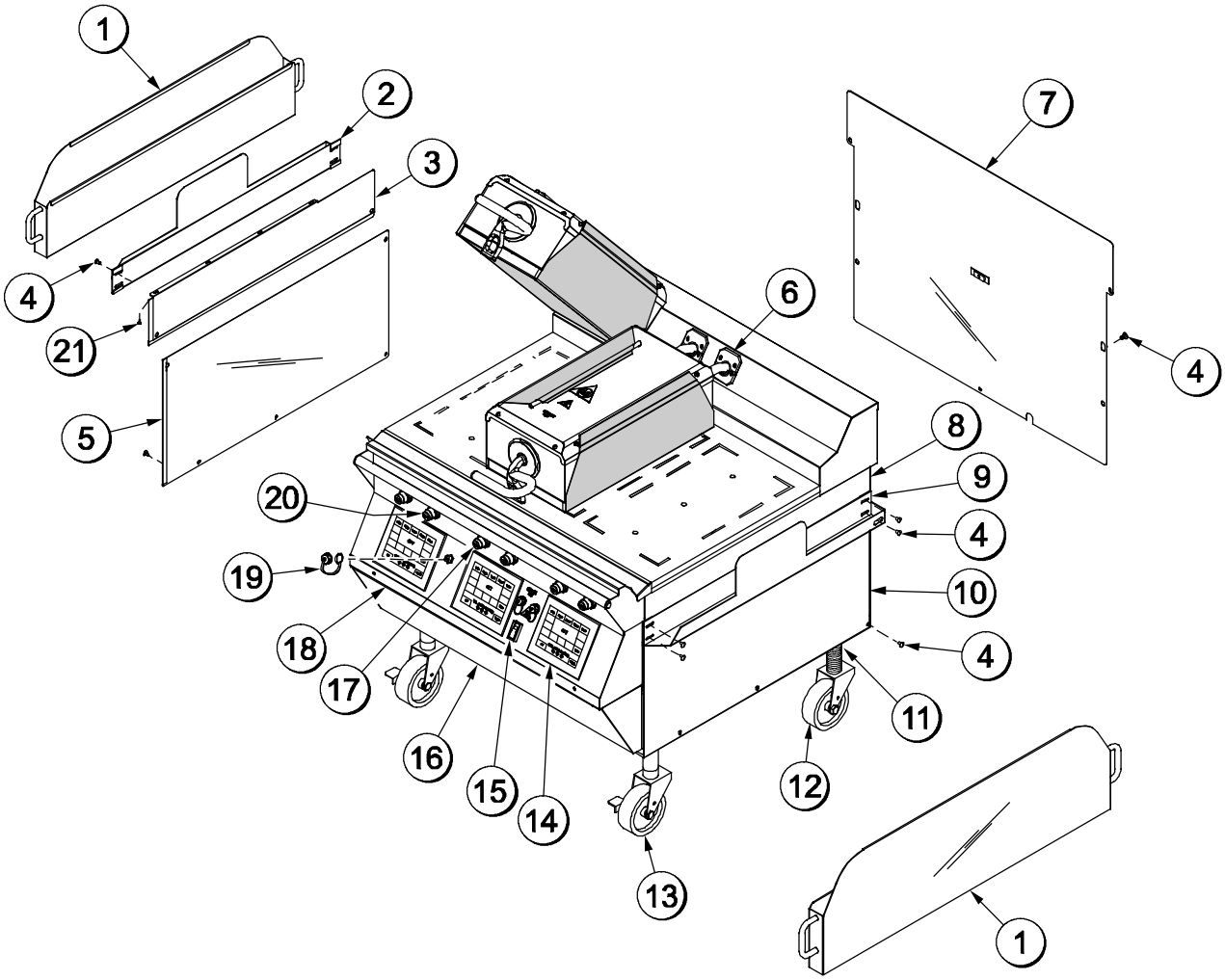

Figure 2

ITEM	DESCRIPTION	PART NO.
1	CAN A.-GREASE *HEM	X80925
2	SLIDE A.-CAN GREASE LEFT	X83854
3	PANEL-SIDE-UPPER LEFT	073990
4	SCREW-10-32X3/8 SLTD TRUS	024298
5	PANEL-SIDE-LOWER *LEFT	073992
*6	KIT A.-GREASE SHIELD	X78330-SER
7	PANEL A.-BACK SERVICE	X73995
8	PANEL-SIDE-UPPER RIGHT	073989
9	SLIDE A.-CAN GREASE RT	X83853
10	PANEL-SIDE-LOWER RIGHT	073991
11	NUT-JAM 1 1/2-12 STEEL	073594

ITEM	DESCRIPTION	PART NO.
12	CASTER-5" 7-5/8 STEM	078377
13	CASTER-GRILL 5” LOCK	073240
14	KIT A.-GRILL CONTROL	X73474-SER
15	SWITCH-ROCKER-DPST-10A	076989-WP
16	PANEL A.-FRONT-LOWER	X73979
17	BUTTON-OPERATOR-RED	076011
18	PANEL A.-LIGHT	X73983
19	COVER A-USB WATERPROOF	068583
20	BUTTON-OPERATOR-BLACK	076012
21	SCREW 10-32 X 3/8	039381

*1 KIT PER PLATEN

L820 / G820 Exploded View

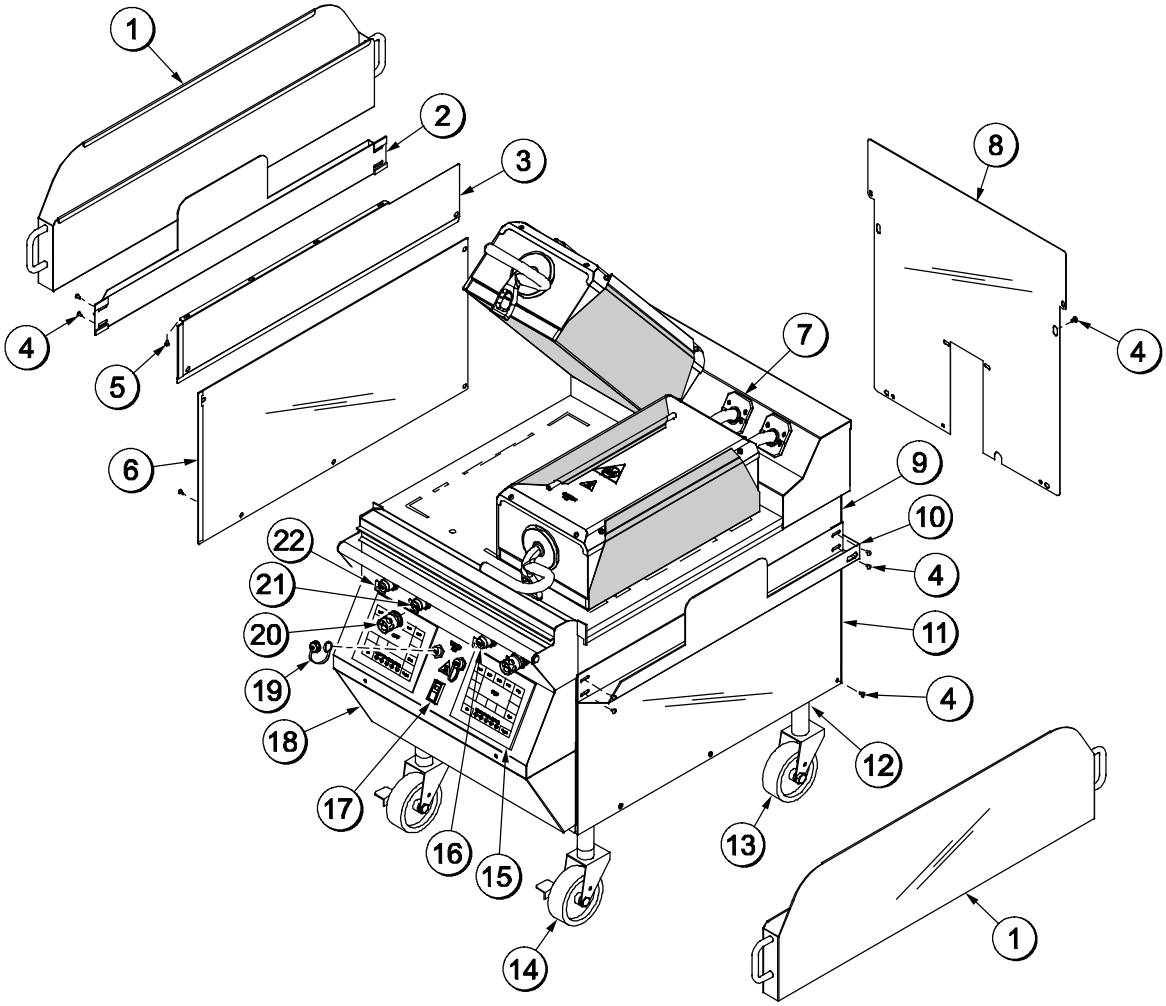

Figure 3

ITEM	DESCRIPTION	PART NO.
1	CAN A.-GREASE HEM	X80925
2	SLIDE A.-CAN GREASE LEFT	X83854
3	PANEL-SIDE UPPER LEFT	073990
4	SCREW-10-32X3/8 SLTD TRUS	024298
5	SCREW 10-32 X 3/8	039381
6	PANEL-BACK-LOWER LEFT	073992
*7	KIT A.-GREASE SHIELD	X78330-SER
8	PANEL-BACK-LOWER	069656
9	PANEL-SIDE UPPER RIGHT	073989
10	SLIDE A.-CAN GREASE RIGHT	X83853
11	PANEL-SIDE-LOWER-RIGHT	073991

ITEM	DESCRIPTION	PART NO.
12	NUT-JAM 1-1/2-12 STEEL	073594
13	CASTER-5" 7-5/8 STEM	078377
14	CASTER-GRILL 5" W/LOCK	073240
15	KIT A.-GRILL CONTROL	X73474-SER
16	BUTTON-OPERATOR-RED	076011
17	SWITCH-ROCKER-DPST-10A	076989-WP
18	PANEL A.-FRONT-LOWER	X69660
19	COVER A.-USB	068583
**20	GUARD-LENSE	075288
21	BUTTON-OPERATOR-BLACK	076012
**22	LABEL-CONTROL PANEL	075699SYM3

* 1 KIT PER PLATEN
**INTERNATIONAL, ONLY

150114

L822 Exploded View

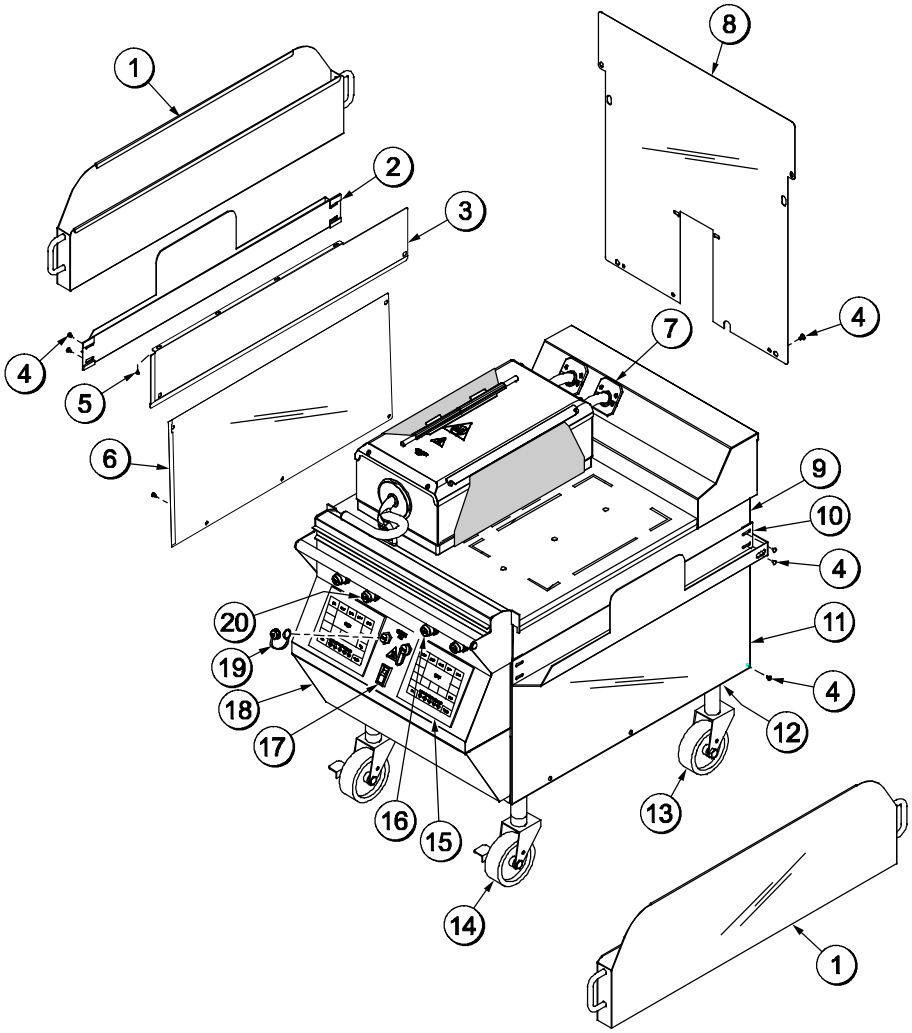

Figure 4

ITEM	DESCRIPTION	PART NO.
1	CAN A.-GREASE *HEM	X80925
2	SLIDE A.-CAN GREASE LEFT	X83854
3	PANEL-SIDE UPPER-LT	073990
4	SCREW-10-32X3/8 SLTD	024298
5	SCREW-10-32X3/8 UNSL HWH	039381
6	PANEL-SIDE-LOWER *LEFT	073992
7	KIT A.-GREASE SHIELD*	X78330-SER
8	PANEL-BACK-SERVICE	069656
9	PANEL-SIDE UPPER-RT	073989
10	SLIDE A.-CAN GREASE RIGHT	X83853
11	PANEL-SIDE-LOWER *RIGHT	073991

ITEM	DESCRIPTION	PART NO.
12	NUT-JAM 1 1/2-12 STEEL	073594
13	CASTER-5" 7-5/8 STEM RIGID	078377
14	CASTER-5" 7-5/8 SWIVEL W/LOCK	073240
15	KIT A.-GRILL CONTROL-GEN MRKT	X73474-SER
16	BUTTON-OPERATOR-RED	076011
17	SWITCH-ROCKER-DPST-10A	076989-WP
18	PANEL-FRONT-LOWER	069661
19	COVER A.-USB WATERPROOF	068583
20	BUTTON-OPERATOR-BLACK	076012

L828 / G828 Exploded View

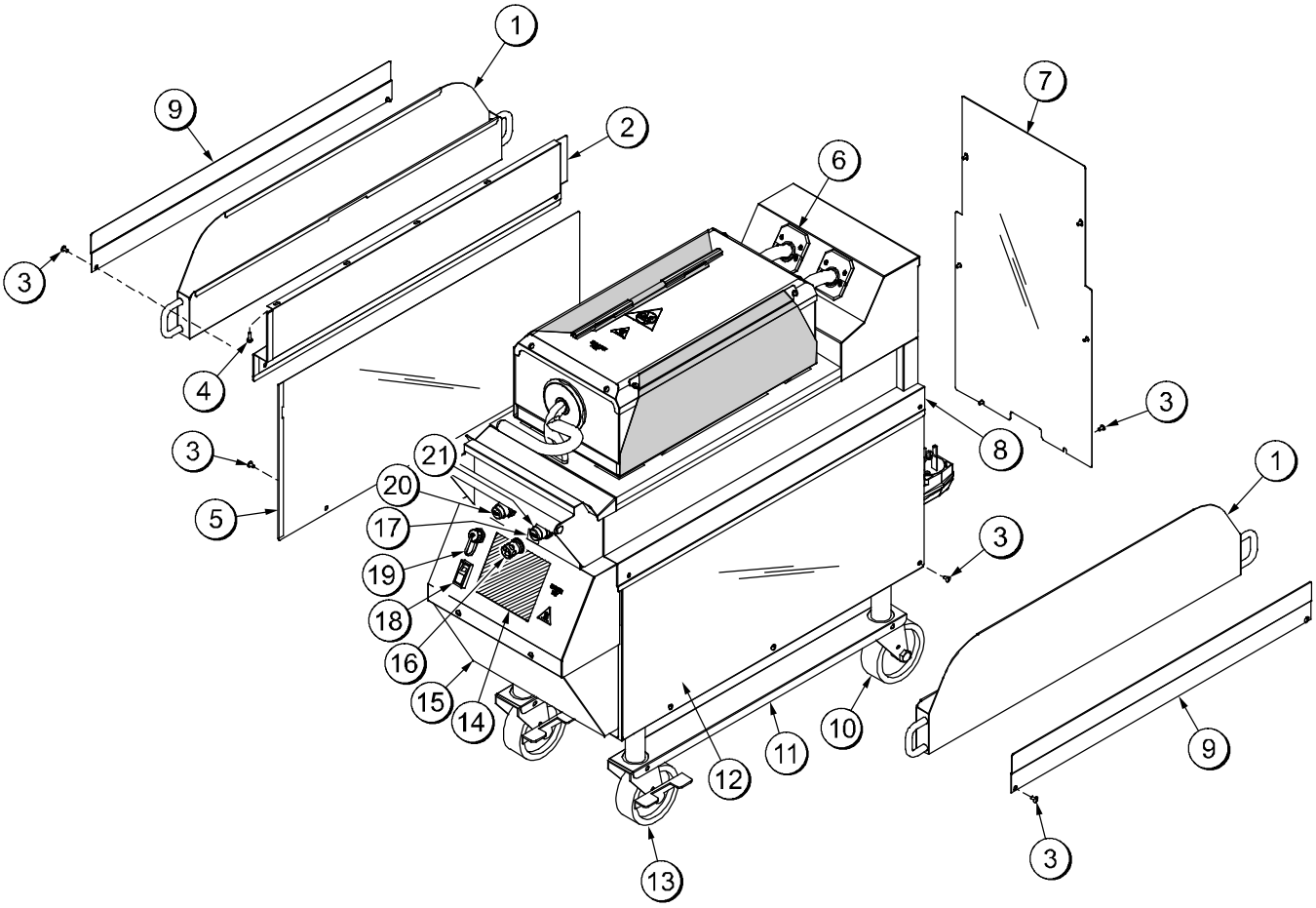

Figure 5

ITEM	DESCRIPTION	PART NO.
1	CAN A.-GREASE *HEM	X81942
2	PANEL-SIDE UPPER-LT	081973
3	SCREW-10-32X3/8 SLTD	024298
4	SCREW-10-32X5/8 UN SL	039382
5	PANEL-SIDE *LEFT	081981
6	KIT A.-GREASE SHIELD	X78330-SER
7	PANEL-REAR	082021
8	PANEL-SIDE UPPER-R	081982
9	PANEL-GREASE CAN RETAINER	082020
10	CASTER-5 IN. 7-5/8 STEM	081971
11	LOCK-WHEEL	076522

ITEM	DESCRIPTION	PART NO.
12	PANEL-SIDE *RIGHT	081980
13	CASTER-5" 7-5/8 STEM-BRAKE	081974
14	KIT A.-GRILL CONTROL	X73474-SER
15	PANEL A.-FRONT-LOWER	X81951
**16	GUARD-LENSE	075288
**17	LABEL-CONTROL PANEL	075699SYM3
18	SWITCH-ROCKER-DPST-10A	076989-WP
19	COVER A.-USB	068583
20	BUTTON-OPERATOR-RED	076011
21	BUTTON-OPERATOR-BLACK	076012

150107

Accessories Supplied With Grill

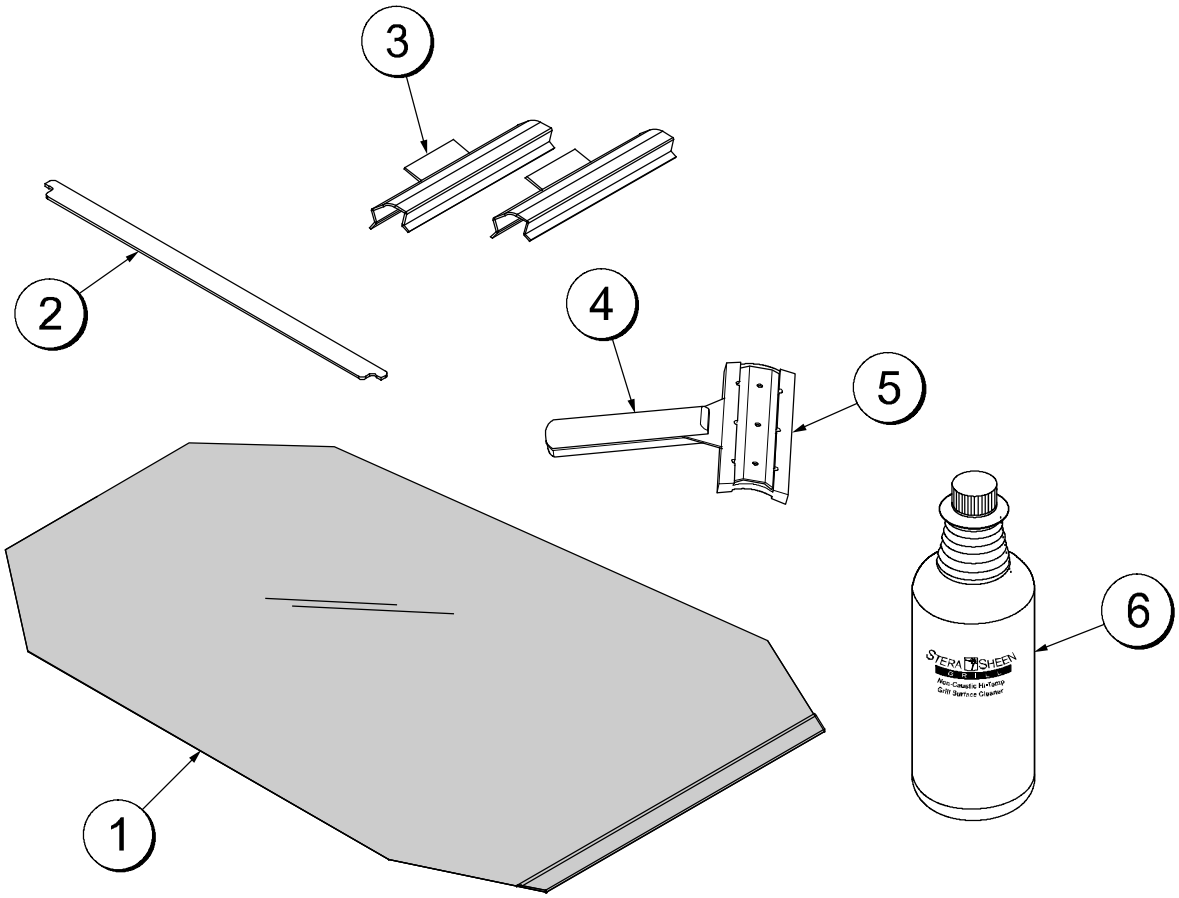

Figure 6

ITEM	DESCRIPTION	PART NO.
1	SHEET-RELEASE - BOX OF 9	080595
2	RETAINER-SHEET RELEASE (RETENTION BAR) (QTY OF 3)	080594
3	CLIP-RELEASE MATERIAL W/TAB (QTY OF 6)	072673

ITEM	DESCRIPTION	PART NO.
4	SCRAPER-TEFLON WIPER	075887
5	STRIP-REPLACEMENT	075888
*6	CLEANER-STERA SHEEN (1 QT. SAMPLE)	073160-SAM

*NOTE: A SAMPLE CONTAINER OF CLEANER IS SENT WITH THE UNIT. FOR REORDERS, ORDER PART NO. 073160 - QTY. OF (6) 1 QT. BOTTLES.

Optional Accessories Available From Local Taylor Distributor

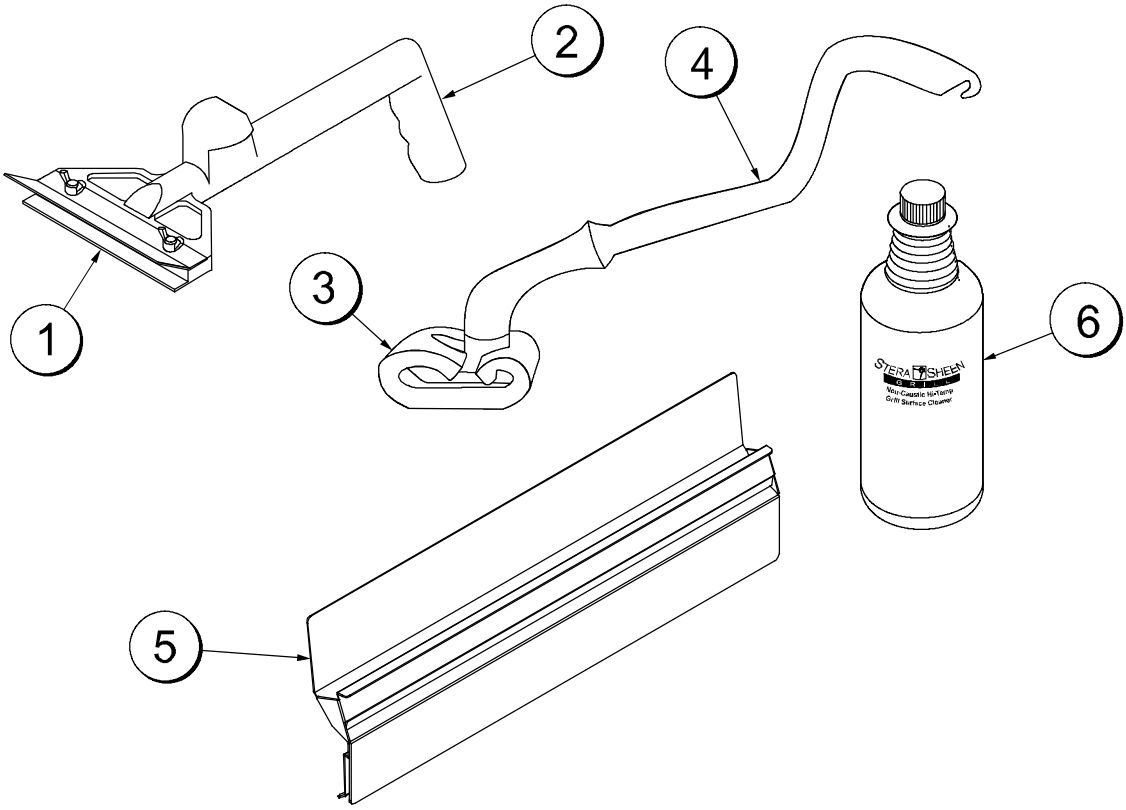

Figure 7

ITEM	DESCRIPTION	PART NO.
1	SCRAPER-BLADE (6 PACK)	073891
2	SCRAPER-GRILL	073225
3	PAD-CLEANING (BOX OF 10)	073737
4	HOLDER-PAD-CLEANING	073736

ITEM	DESCRIPTION	PART NO.
5	BIN A.-TOOL STORAGE	X73829
6	CLEANER-STERA SHEEN (CASE OF 6, 1 QT. BOTTLES)	073160

150514

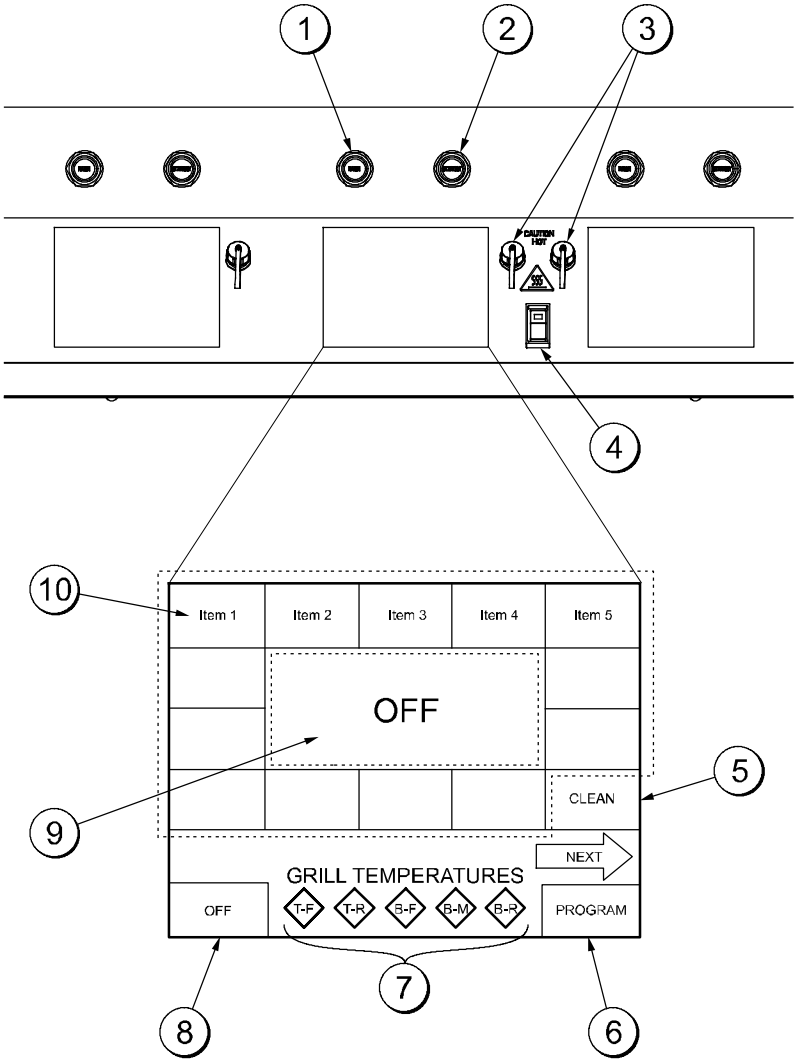

Note: The Model 810 three platen grill has been selected for illustration purposes.

Figure 8

ITEM	DESCRIPTION
1	RAISE BUTTON
2	STANDBY/COOK MODE BUTTON
3	USB COVER/CONNECTION
4	POWER SWITCH
5	CLEAN MODE KEY

ITEM	DESCRIPTION
6	PROGRAM KEY
*7	TEMPERATURE INDICATOR LIGHTS
8	POWER KEY
9	FUNCTION DISPLAY
10	MENU SELECT KEYS

***NOTE:** T-F = TOP FRONT, T-R = TOP REAR, B-F = BOTTOM FRONT, B-M = BOTTOM MIDDLE, B-R = BOTTOM REAR

The three platen Model L810 has been selected to illustrate the step-by-step procedures. For grills equipped with less than three platens, perform the following steps as appropriate for your grill platen configuration.

Daily Opening Procedures

Before operating the grill, the release sheets must be installed on the upper platens. The release sheets should be reversed and rotated on a daily basis (dark color side vs. light color side.)

Perform the following steps for installing release sheets:

CAUTION: Make sure the grill is COOL before attempting to install or remove release sheets.

Step 1
Slide the release sheet retainer through the hemmed end of the release sheet.

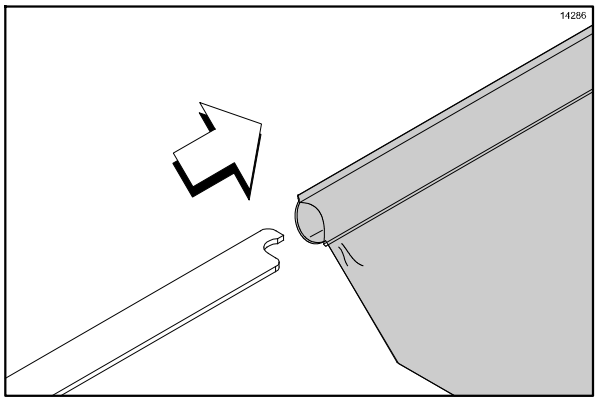

Figure 9

Step 2
Hook the release sheet retainer on the release sheet shoulder screws at the top of the upper platen.

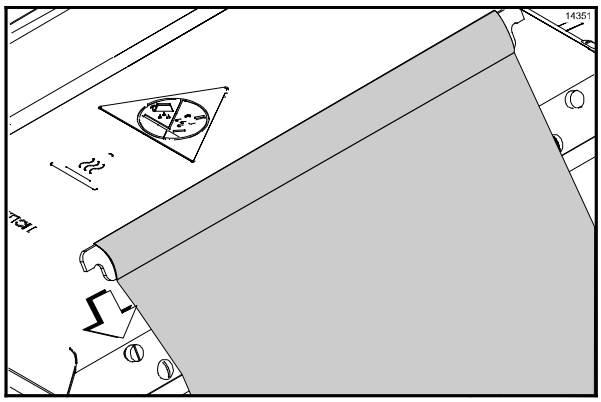

Figure 10

Step 3
Hold the non-hemmed end of the release sheet. Gently pull the sheet tight, wrapping it around the platen in a side-to-side manner.

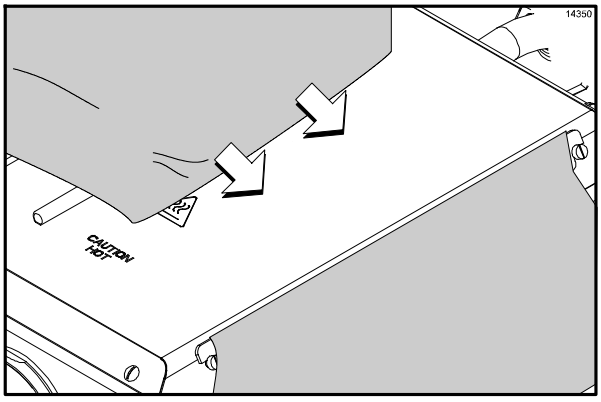

Figure 11

Note: Check the alignment of the release sheet and make sure it fits smoothly over the upper platen.

130206

Step 4
Place the release sheet clips over the release sheet. Press them into place over the release sheet bar at the top of the platen.

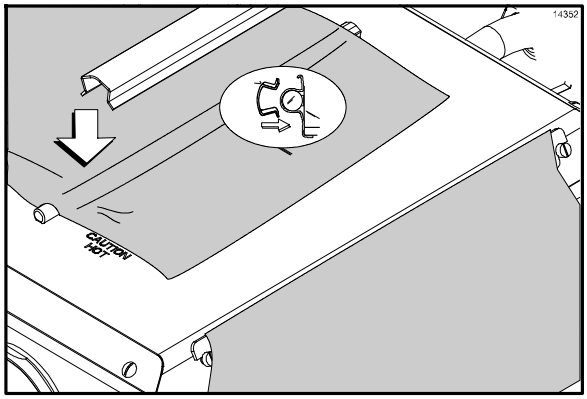

Figure 12

Step 5
Check the tightness of the release sheet against the upper platen.

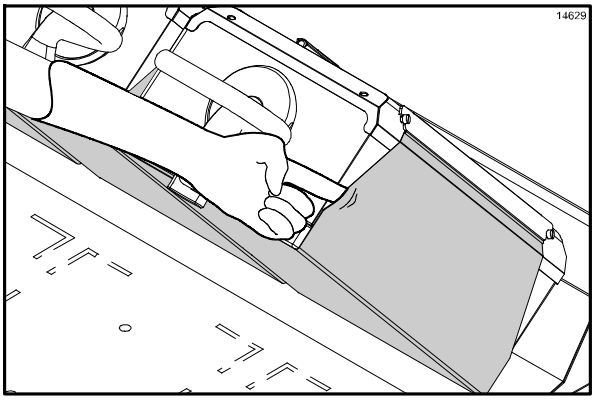

Figure 13

Note: Installing the release sheets too tightly may cause premature failure of the sheet.

Step 6
Repeat steps 1 through 5 for the remaining upper platens.

Note: Temperature checks should only be conducted with the release sheets removed.

The release sheet must be replaced when:

- Cleaning procedures fail to remove all buildup and product sticks to the release sheet.
- A tear appears in the cooking area of the release sheet, causing product to stick to the release sheet.

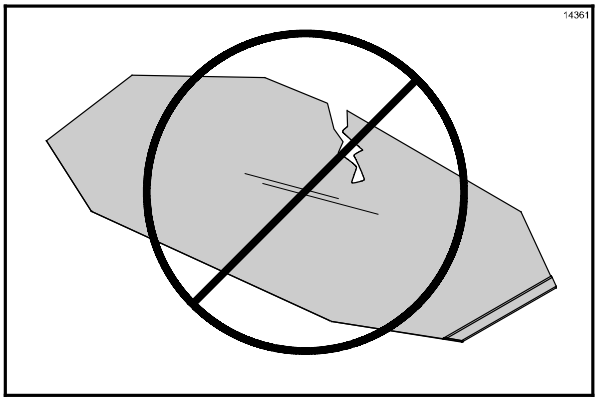

Figure 14

Note: It is not necessary to change the release sheet if small pin holes develop on the sheet.

CAUTION: The upper platen surface and release sheet are very hot. To prevent burn injuries, wear heat-resistant gloves when replacing the release sheets.

Care of Release Sheets

DO NOT:

- **DO NOT** fold or crease.

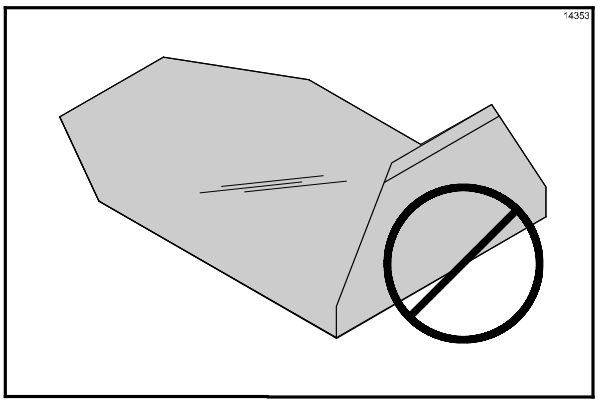

Figure 15

- **DO NOT** touch with sharp objects, grill scrapers, or abrasive pads.
- **DO NOT** place under other equipment or objects.
- **DO NOT** hot-hose or soak in water.

DO:

- **DO** clean with a squeegee after each run of product.
- **DO** wipe with a clean, sanitizer-soaked grill cloth a **minimum of 4 times per hour** and more often during peak periods.
- **DO** clean daily on both sides, using an approved high temperature grill cleaner and the grill cleaning pad and holder identified on page 12.

IMPORTANT! Clean the release sheets using the grill cleaning pad and holder identified on page 12 ONLY. Using any other pad and holder will damage the release sheets.

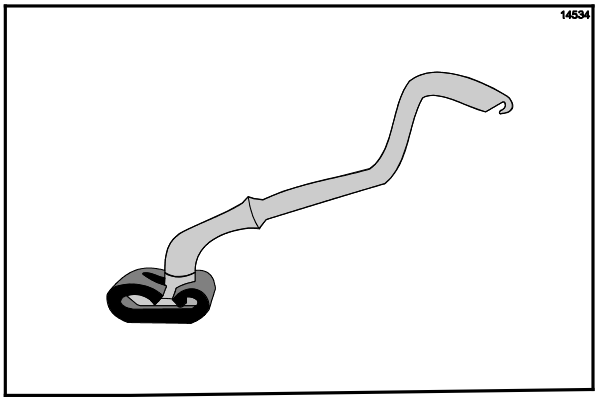

Figure 16

Note: Contact your local Taylor Distributor to purchase the correct grill cleaning pad and holder. (See page 12.)

- **DO** rinse both sides of the release sheet with a clean, sanitizer-soaked grill cloth to remove the cleaner. Allow the release sheet to dry on a clean, flat surface.
- **DO** rotate the release sheet daily and re-install on opposite side than previously used (dark color side vs. light color side).

Start Up of the Grill

IMPORTANT! The lower grill surface and the upper platen MUST BE CLEAN before starting these procedures.

Step 1
Place the power switch in the ON position.

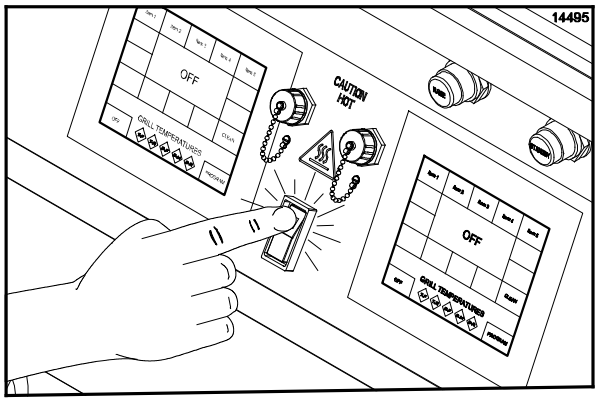

Figure 17

110602

The control will display the word “INITIALIZATION” for five seconds and then will enter the OFF mode, displaying the message “OFF”. The temperature indicators will not be illuminated. A tone will sound for 20 seconds unless the operator touches the display screen, raise button or the standby button.

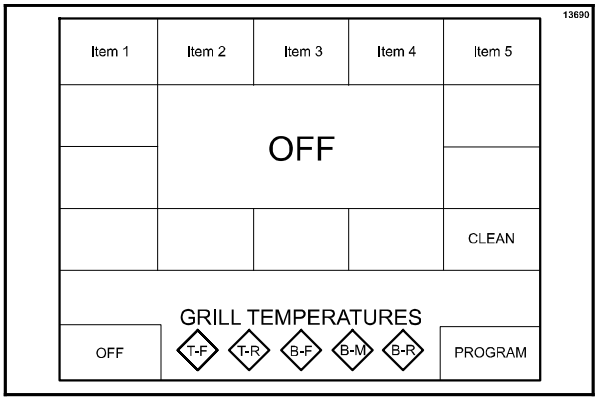

Figure 18

Step 2
Touch an item menu key on the control to start the grill. The grill will start heating up to the proper temperature. The control will display the selected menu item and indicate “TOO COOL” for each heat zone. The grill temperature indicators will be illuminated in **amber** while they are heating up.

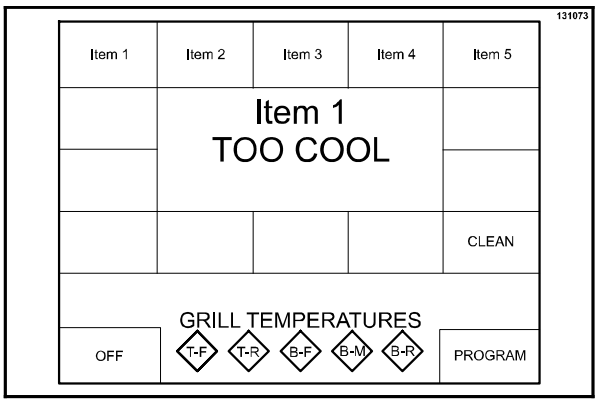

Figure 19

When the grill is at the proper temperature, the temperature statements will no longer display and the temperature indicators will be illuminated in **green**.

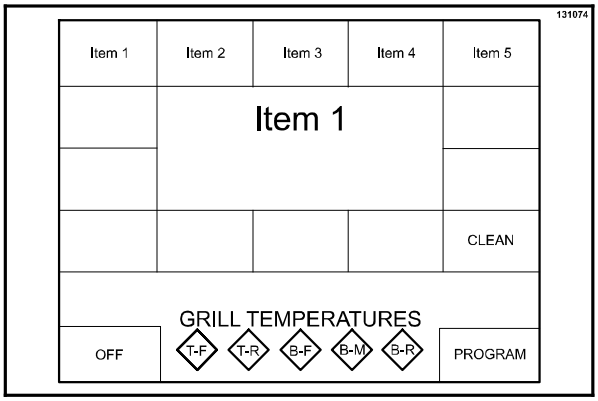

Figure 20

Programming Menu Items

To enter the Program Mode, the grill control must be in the OFF or IDLE mode. The Program Mode cannot be entered If the grill is in the STANDBY or COOK mode.

Step 1
Press and hold the PROGRAM key for approximately five seconds to enter the Program Mode.

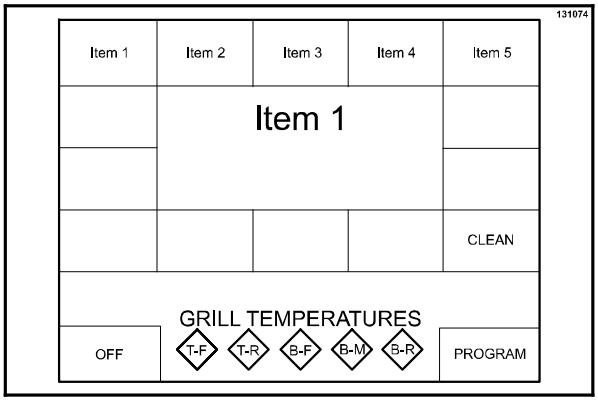

Figure 21

Step 2
The PASSWORD screen will appear. Enter the Operator Password "**STORE1**" and press the OK key.

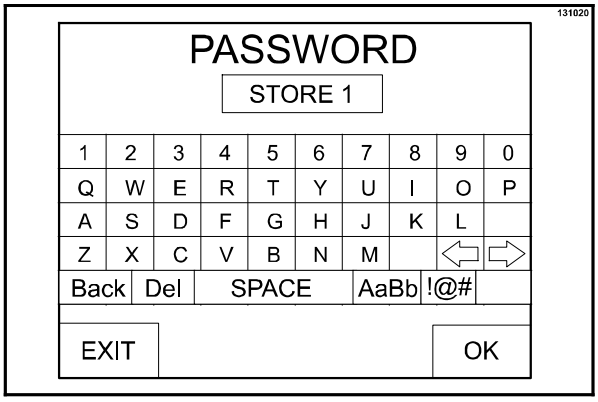

Figure 22

Step 3
The PROGRAM MODE screen will appear, displaying the version of the software, motor control, and motor control boot, along with several keys.

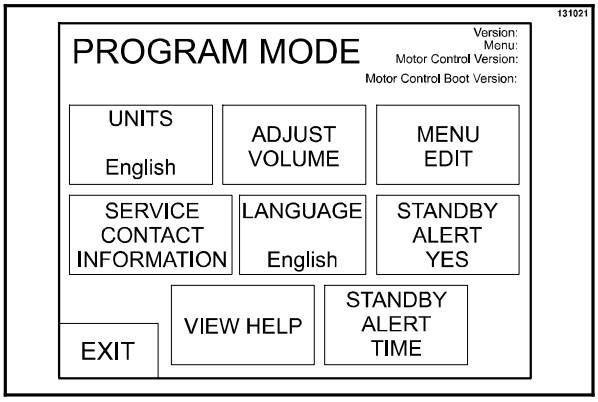

Figure 23

UNITS Key

The UNITS key is used to select either English or metric units of measure. If English is selected, the temperatures will be displayed in °F and gaps will be displayed in inches. If Metric is selected, the temperatures will be displayed in °C and gaps will be displayed in mm.

ADJUST VOLUME Key

The ADJUST VOLUME key displays the current volume. To increase or decrease the volume, use the UP and DOWN arrow keys.

Note: To scroll at a faster rate, press and hold the arrow key.

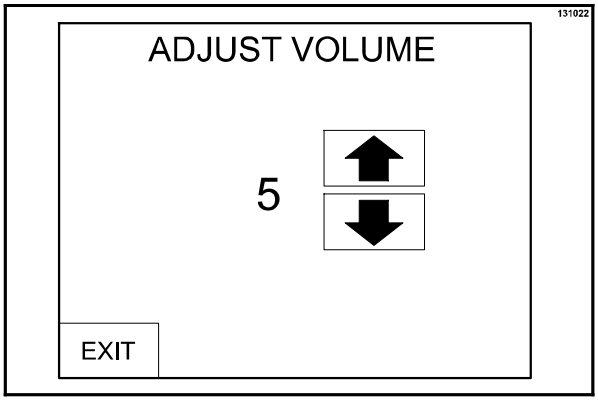

Figure 24

MENU EDIT Key

The MENU EDIT key is used to program a new menu item or make changes to an existing one. When the MENU EDIT key is pressed, the following screen will display.

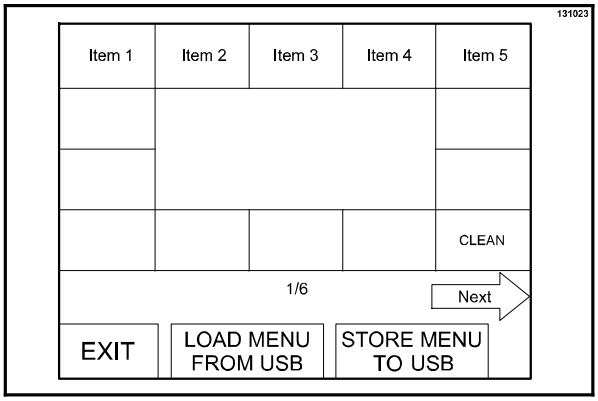

Figure 25

If there is more than one screen of menu items, press the Previous or Next arrow keys to access the other menu items.

150402

Press the menu item key to be programmed. The following screen will display.

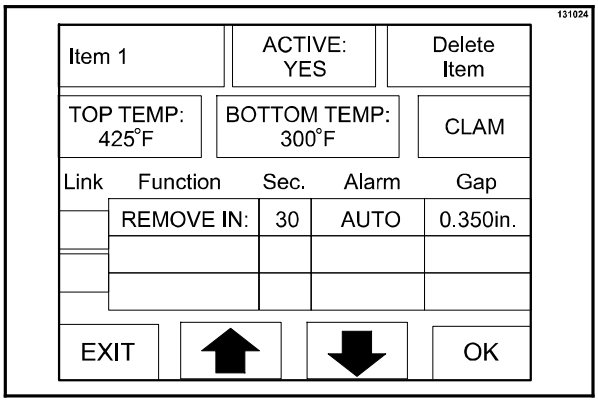

Figure 26

To edit a menu item, press the menu item key to bring up a virtual keyboard. Use the back arrow to scroll to the beginning of the name (Item 1). Press the “Del” key until all of the characters are removed. Type in the desired name (up to 9 characters) and press the OK key to return to the previous screen.

If the box is blank (creating a new Item), type in the desired name (up to 9 characters). A maximum of two lines of description can be used. Press the OK key to return to the previous screen.

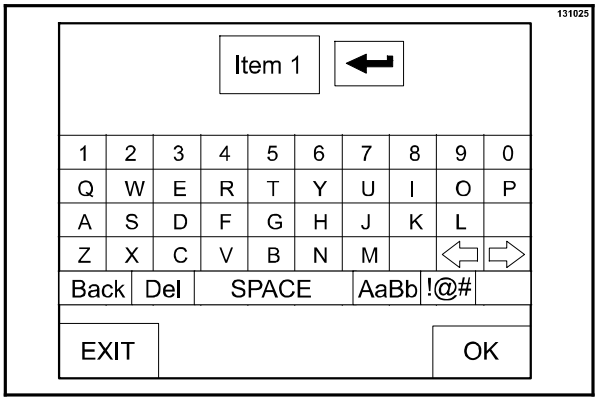

Figure 27

ACTIVE: YES or NO

Pressing the ACTIVE key toggles between “YES” and “NO.” Selecting “YES” will allow the menu item to be displayed on the main menu screen. If “NO” is selected, the menu settings remain saved in the control after the OK key is pressed, but will not be visible on the main menu screen. (See Figure 26.)

DELETE Item

This key is used to delete the selected menu item. When pressed, the screen displays “YES” or “NO”. Selecting “YES” removes the item from the control memory.

TOP TEMP

This key displays the current set point temperature for the platen. To increase or decrease the temperature, use the UP and DOWN arrow keys.

Note: To scroll at a faster rate, press and hold the arrow key.

BOTTOM TEMP

This key displays the current set point temperature for the lower grill surface. To increase or decrease the temperature, use the UP and DOWN arrow keys.

Note: When setting the temperatures for a given item, the limits are 150°F to 450°F (66°C to 232°C) for the upper platen and 150°F to 400°F (66°C to 204°C) for the lower grill surface.

CLAM/FLAT

This key displays the current setting (CLAM or FLAT) associated with that function. Pressing the key toggles the mode to the opposite selection.

If a CLAM item is selected, the upper platen will lower to the specified gap to allow two-sided cooking.

If a FLAT item is selected, the product is cooked on the lower cook surface, only. The upper platens remain in the up position.

IMPORTANT: The upper platens remain at set temperature in the FLAT mode. Avoid contact with the upper platens and grill surfaces to avoid burn injuries.

GAP: This key is only active if CLAM has been selected. The key displays the platen gap (in inches or mm) associated with the FUNCTION. To increase or decrease the gap setting, press and hold the UP and DOWN arrow keys.

Note: The gap is designed to range from 0 to 1” (2.54 mm). Operating the grill to cook products thicker than 1” (2.54 mm) will not allow proper platen operation.

MULTIPLE TIMING FUNCTIONS: There are four timing functions for clam and flat menu items. Each function has a set of parameters associated with it. The functions currently associated with the menu item are displayed. Pressing function 1, function 2, or function 3 will bring up the next function in the list. The functions provided are:

- REMOVE IN
- SEAR IN
- TURN IN
- SEAR/TURN IN

MULTIPLE GAP FUNCTION - LINK: Any time a second or third timing function is programmed into a menu item, the Link function is automatically activated to “Yes.” The Link feature allows the platen to move up to the Home position and then come back down to the next predetermined gap and timing function.

Note: If the Link function is on “Yes,” the platen arm stays down and only the platen will move up and down. If the Link function is on “No,” the platen arm will rise to the up position and then the Standby button will have to be manually pressed to start a second or third timing function.

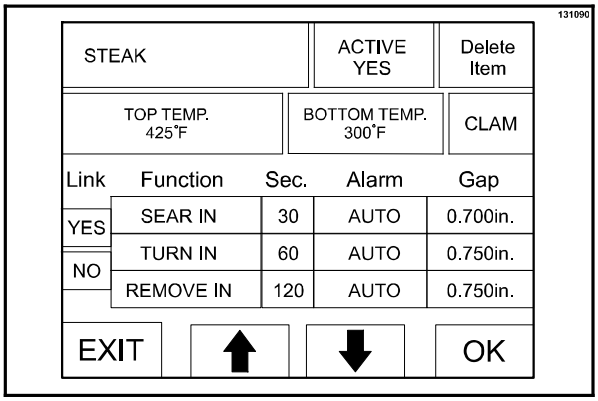

Figure 28

In the example shown in Figure 28, the platen will come down and SEAR the product for 30 seconds. After that time has expired, with the LINK function set to “YES,” the platen will move up to the Home position and then come back down to the next set gap for another 30 seconds. Once that time has expired, with the LINK function set to “NO,” the platen arm will raise all the way up so that the product can be turned.

After the product has been turned, the Standby button will need to be pressed to bring the platen back down. Once it reaches the next set gap, the product will then cook for another 60 seconds. After that time has expired, the platen arm will raise all the way up and the product can be removed.

Note: Each function is an accumulative timing sequence in seconds.

SEAR IN - 30 seconds
TURN IN - 30 seconds
REMOVE IN - 60 seconds
Total cook time would be 120 seconds.

ALARM AUTO/MANUAL: This key displays the current status of the alarm mode. Pressing the key toggles the mode to the opposite selection.

If “ALARM AUTO” is selected, the alarm will sound at the end of the cook cycle automatically and then stop after 5 seconds has elapsed.

Selecting ALARM MANUAL requires the operator touch anywhere on the display screen or the raise or standby buttons to stop the alarm.

XXX SECONDS: This key displays the time associated with that menu item in seconds. To increase or decrease the seconds setting, press and hold the UP and DOWN arrow keys.

GAP: Each timing function has an associated gap setting. This setting can be changed selecting the gap value. Press and hold the UP and DOWN arrow keys to increase and decrease the gap value.

Upon completion of all programming selections, save the selections by pressing the OK key. To return to the main display screen without saving the programming selections, press the EXIT key.

SERVICE CONTACT INFORMATION Key

Press the SERVICE CONTACT INFORMATION key to view the programmed service contact information.

Figure 29

LANGUAGE Key

The Language key is used to select the language the control will display. The available languages are English, French, Portuguese, Russian, and Spanish. See Figure 32.

STANDBY ALERT - YES Key

Pressing this key toggles between YES and NO. If “Yes” is selected, an alert will sound when the platen has not been used for a Cook Cycle or placed into the Standby mode for a predetermined amount of time. See Standby Alert Timer. If “No” is selected, the platen can still be placed into the Standby position, but there will be no set timing function associated with it.

Note: This function should be used to help conserve the energy cost of running the grill during slow times.

VIEW HELP Key

The View Help key is not functional at this time (future development).

STANDBY ALERT TIME Key

This is a programmable timer that can be set from 5:00 - 60:00 minutes. After the selected time has expired, an alert will sound and the screen will display “PUT INTO STANDBY.” Once the Standby Alert has sounded, it will take three Standby button presses to bring the platen down into the Standby position. The first button press will clear the alert and the next two presses will actually bring the platen down into the Standby position. Button presses should be done at approximately one second intervals.

Note: If the button presses are done too quickly, the platen will come down and initiate a cook cycle instead of placing the platen into Standby. Pressing the Raise button will cancel the cook cycle.

Loading Store Menu Items To USB

The same USB flash drive that was used to load software into the grill can be used to perform this procedure.

Step 1
Remove the USB cap from the USB connector to access the USB port.

Step 2
Insert the USB flash drive into the USB port.

Step 3
Press and hold the PROGRAM key for 5 seconds to enter the Program Mode.

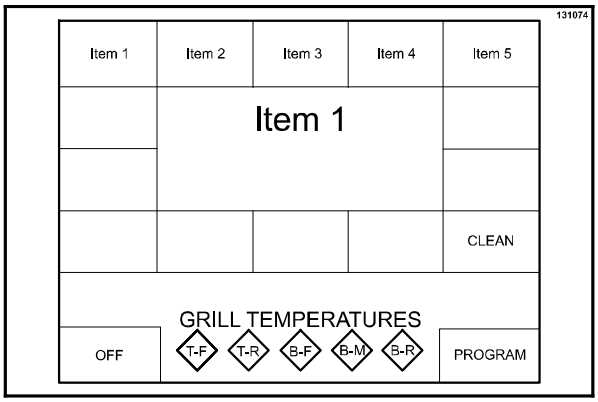

Figure 30

Step 4
Enter the Operator Password “STORE1” and press the OK key.

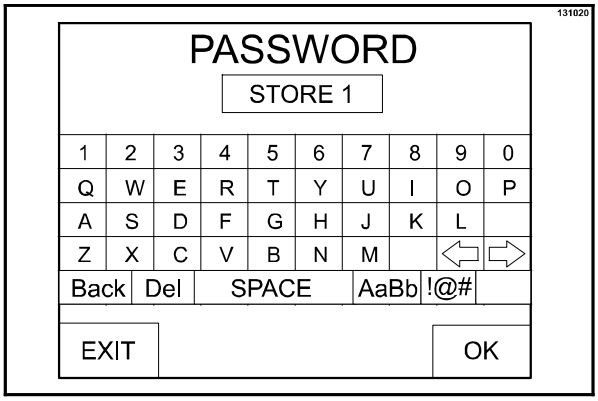

Figure 31

Step 5
Press the MENU EDIT key.

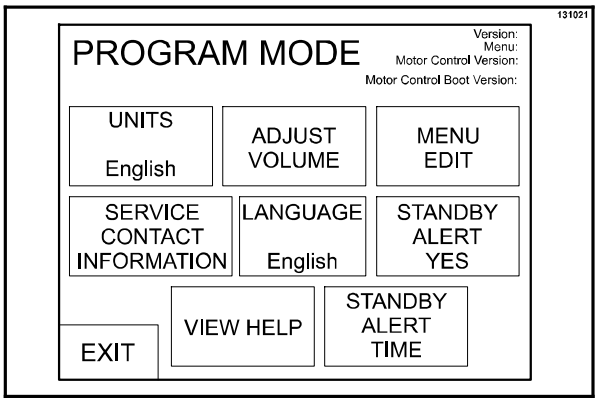

Figure 32

Step 6
Press the STORE MENU TO USB key.

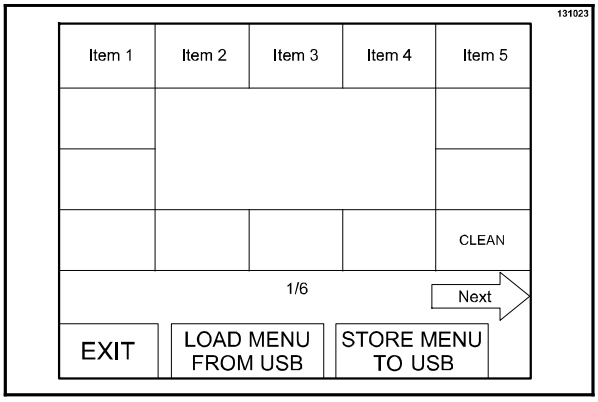

Figure 33

Step 7
Using the keyboard displayed on the control, enter a file name to save the menu item. The name can have up to 8 characters and must have no spaces in the name. Pressing the OK key will save the menu item to the USB flash drive. Press the EXIT key three times to return to the menu item screen.

Step 8
Remove the USB flash drive from the USB port and reinstall the USB cable cap on the USB connector.

Loading Menu Items From USB

Once the menu file is loaded on the USB flash drive, the next control board can be programmed from the USB flash drive.

Step 1
Repeat Steps 1 through 5 from “Loading Store Menu Items to USB.”

Step 2
Press the LOAD MENU FROM USB key.

Step 3
The control can display up to 40 different menu options loaded on the USB flash drive. Select the key for the correct menu to load. The control will display “DONE” at the bottom of the screen when the menu is loaded. Press the EXIT key twice to return to the menu item screen.

Step 4
Remove the USB flash drive from the USB port and reinstall the USB cable cap on the USB connector.

Step 5
To load menu items from the USB flash drive to another control board, repeat these software loading procedures.

Patty Placement & Removal

Placement procedures of meat products must be followed on the grill. The meat must be placed on the lower grill surface from front to back. When the cook cycle is complete, the upper platen will raise.

Note: It is very important that all patties be removed from the lower grill surface in the same sequence that they were placed before cooking.

Patties must be removed immediately after the upper platen has been raised to the OPEN position and after the meat has been seasoned.

Patties are generally placed two at a time from front to back of grill and right to left. The removal order of the patties is shown in the diagrams by the number shown in the center of each patty.

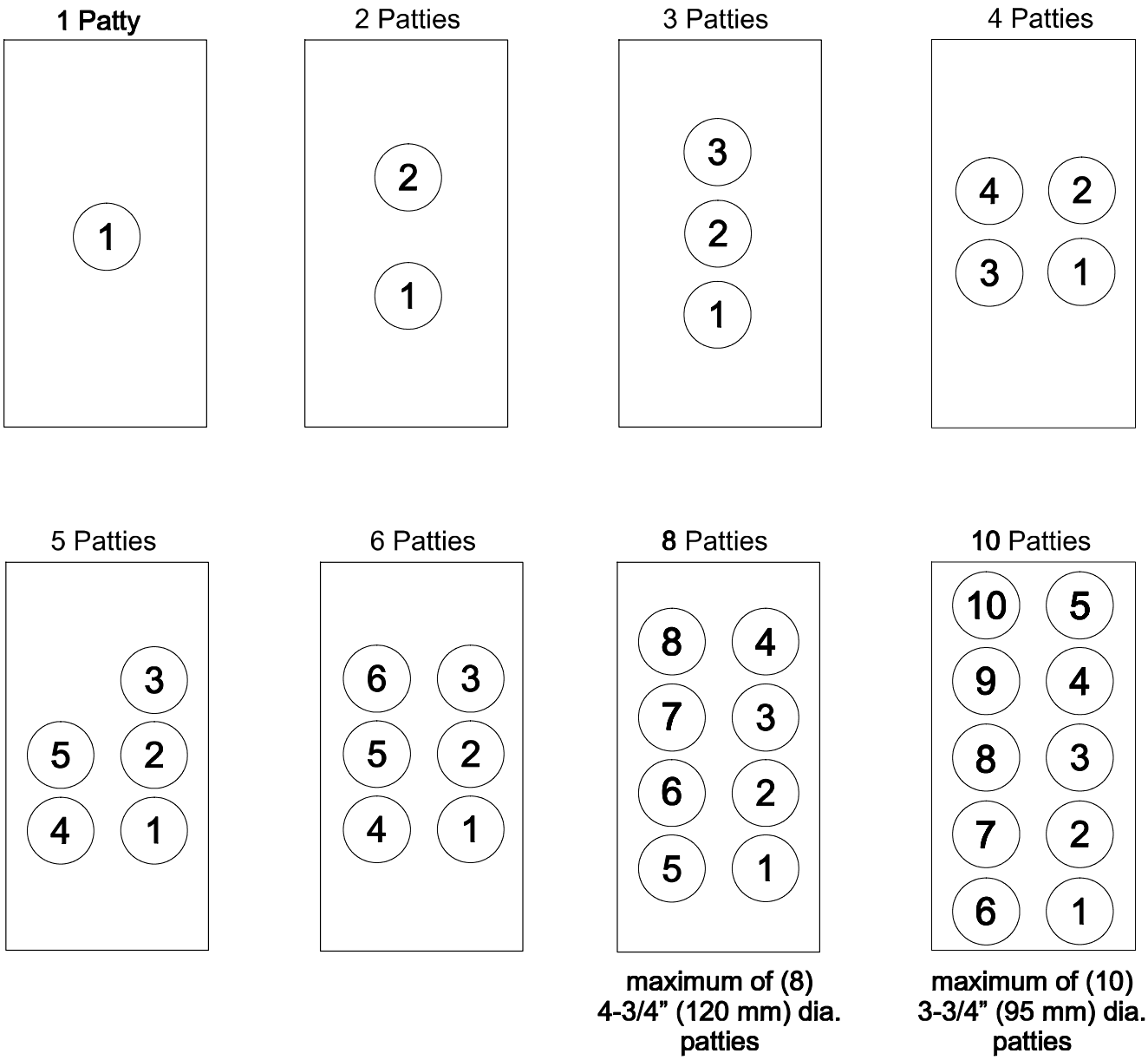

Figure 34

Operating Procedures

Cooking Product

Step 1
Select the menu item to be cooked. When the grill is at the correct temperature, the grill temperature indicators will be **green** and the control will not display any temperature statements.

Step 2
Quickly place the product on the lower grill surface from front to back, per the Patty Placement Guide on page 23. Make sure all product is inside the etched target zone.

Step 3
Press the STANDBY button once.

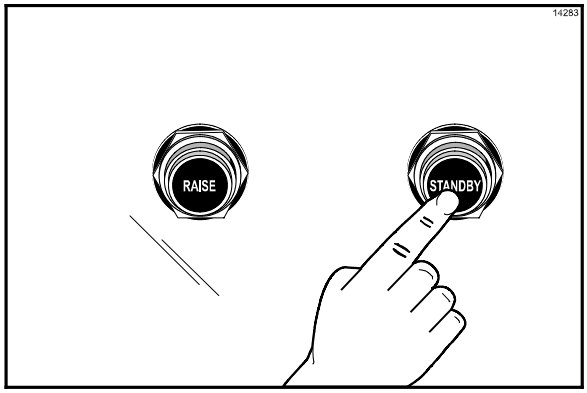

Figure 35

The display reads “MOVING DOWN” as the platen lowers to the cook surface.

During the cooking cycle, the display will show the name of the current menu item, “REMOVE IN”, and the time remaining until the product should be removed.

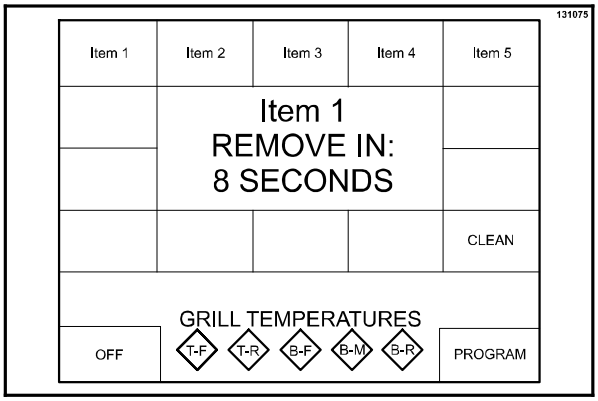

Figure 36

At the end of the cook cycle, the control will display “DONE”, a tone will sound, and the platen will automatically raise.

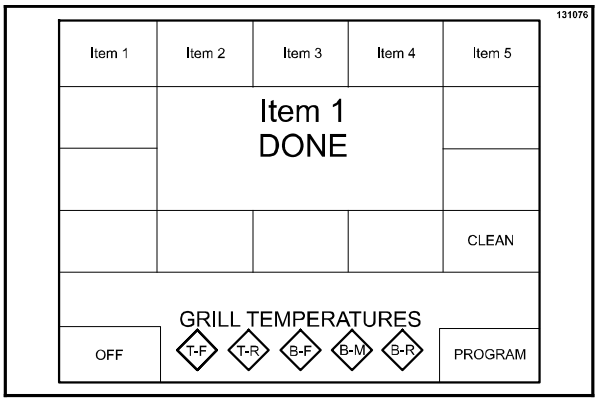

Figure 37

Note: To cancel a cook cycle at any time, press the RAISE button. A tone will sound and the display will read “CANCEL” for five seconds and then enter the IDLE mode.

150514

Flat Item Cook Cycle Screen

The following is an example of a flat item cook cycle screen. The first line function default is REMOVE IN.

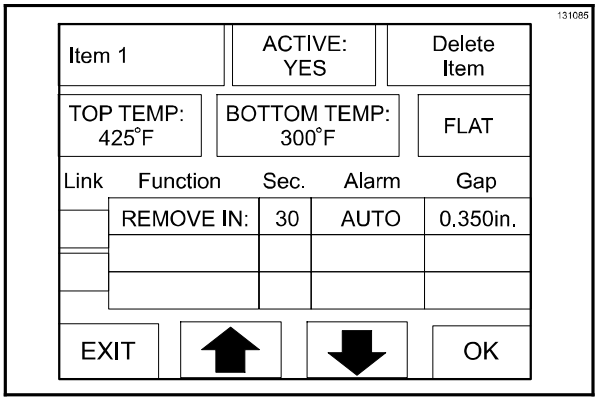

Figure 38

To edit a menu item, press the menu item key to bring up a virtual keyboard. Press the BACK key until all of the characters are removed. Type in the desired name (up to 9 characters) and press the OK key to return to the previous screen.

If the box is blank (creating a new Item), type in the desired name (up to 9 characters). A maximum of two lines of description can be used. Press the OK key to return to the previous screen.

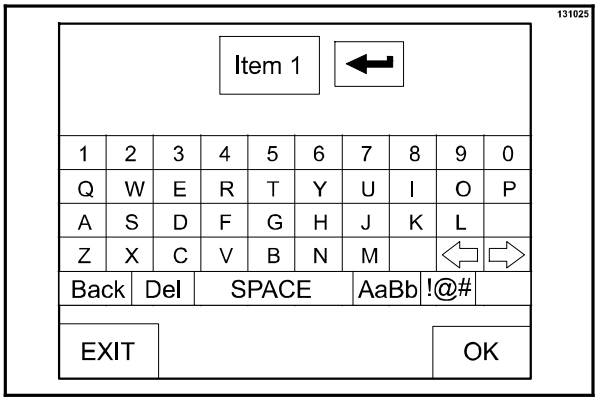

Figure 39

Flat Menu Item Timing Function

Up to four flat menu items can be cooked in one zone at any time. Select any flat item from the menu screen and press the Standby button once to initiate the countdown timer. The “remove in” time will display on the screen. Select the same or another flat menu item and press the Standby button again to initiate the second countdown timer. The display screen will then change, showing the “remove in” time for both of the flat menu items selected. Follow this same procedure for up to four flat menu items to be displayed.

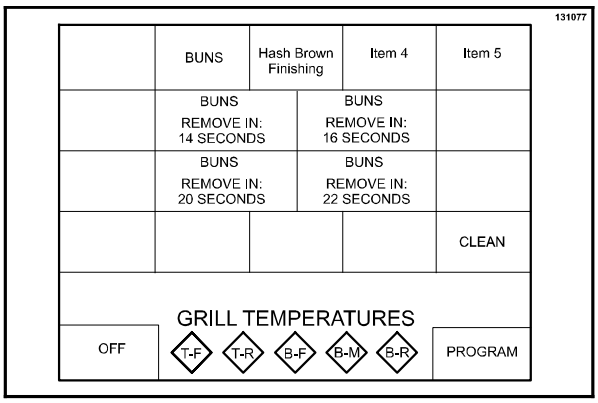

Figure 40

To Cancel a Flat Menu Item Timing Function

If only one flat menu item timing function is displayed, press the Raise button. If two or more flat menu item timing functions are displayed, **press and hold** your finger on the menu item to be cancelled and press the Raise button at the same time.

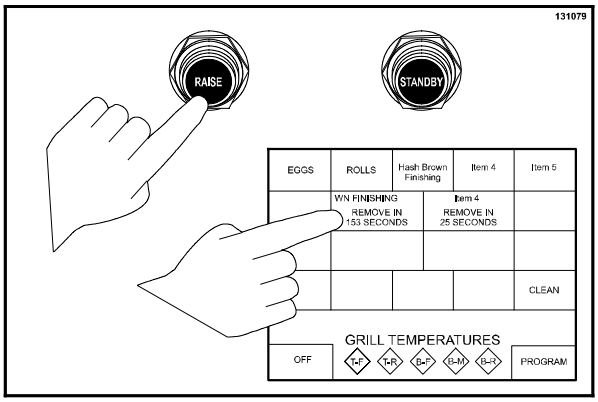

Figure 41

150514

One Function Cook Cycle Screen

The following is an example of a One Function Cook Cycle Screen. The first line function default is REMOVE IN.

Note: The Sec, Alarm, and Gap must be set.

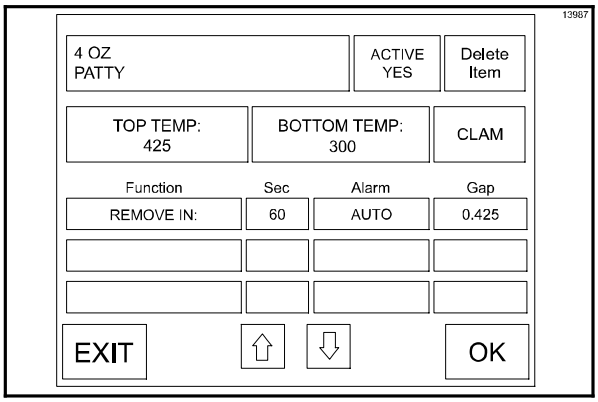

Figure 42

Two Function Cook Cycle Screen

The following is an example of a Two Function Cook Cycle Screen. The two functions shown are TURN IN and REMOVE IN.

The total cook time or REMOVE IN time is 100 seconds. The first function is 60 seconds and the second function is 100 seconds. Each timing function is accumulative. REMOVE IN is always the last part of the cook cycle.

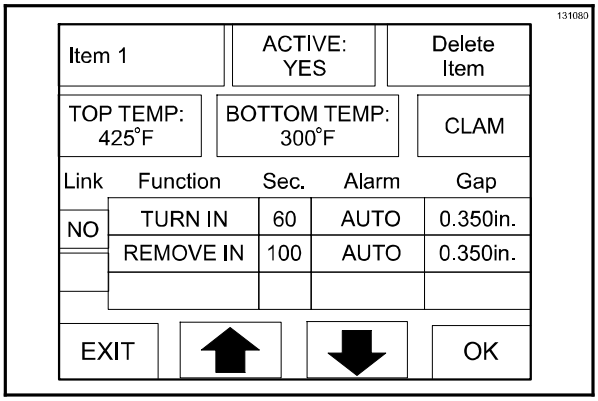

Figure 43

Three Function Cook Cycle Screen

The following is an example of a Three Function Cook Cycle Screen. The three functions are SEAR IN, TURN IN, and REMOVE IN.

The total cook time or REMOVE IN time is 120 seconds. The first function is set at 30 seconds, the second function at 60 seconds, and the third function at 120 seconds. Each timing function is accumulative. REMOVE IN is always the last part of the cook cycle.

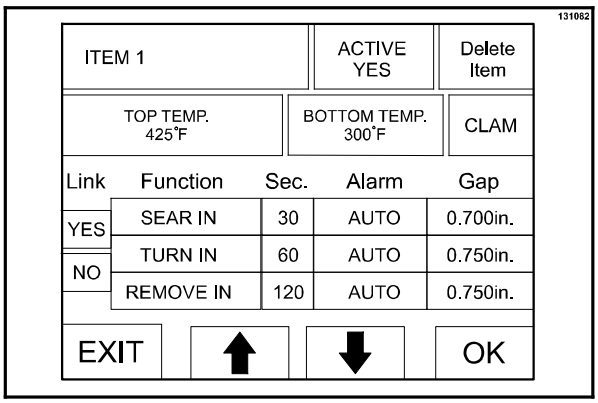

Figure 44

Standby Procedures

Whenever the grill is idle and product is not being cooked, the upper platen should be placed in the STANDBY position to conserve energy.

Step 1
To place the upper platen in the STANDBY position from the open position, press the STANDBY button twice, waiting one second between button presses.

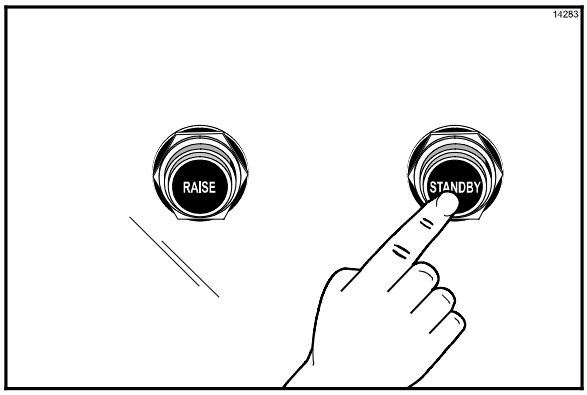

Figure 45

The control will display “GOING TO STANDBY” and then change to display “STANDBY”.

150529

Note: If the Standby Alert mode is active and the alarm is sounding, the STANDBY button must be pressed 3 times, with a one second pause between presses. The first press cancels the alarm and the second two presses lower the upper platen into the Standby position.

Step 2
To raise the upper platen to the OPEN position to resume cooking, press the RAISE button.

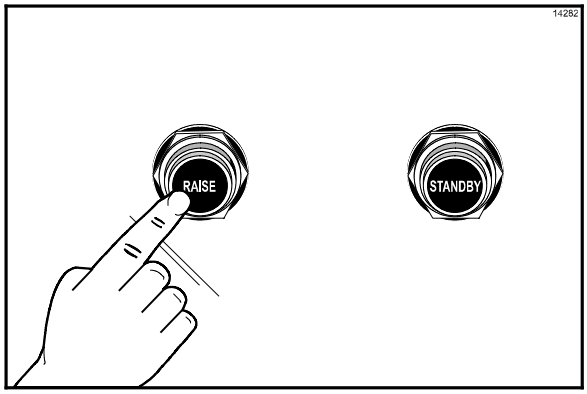

Figure 46

CAUTION: Never use force to raise the upper platen. Damage to components may result. Only use the RAISE button to open the upper platen.

Menu Parameters

To view the settings and actual temperatures for the current item, press and hold the menu item key a minimum of 5 seconds. The screen will display the cook time, gap setting, temperature set points and actual temperature readings for each zone for that menu item.

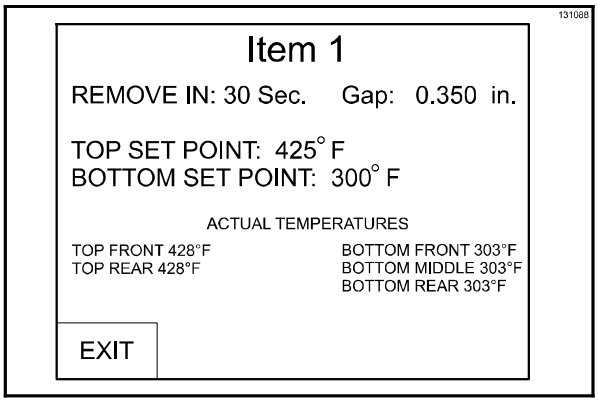

Figure 47

If a key is not pressed for 20 seconds, the grill control will return to the normal display. Pushing the EXIT key will bring the display back to the main display page.

To View Software Versions

Press and release the Program key after two seconds to view the software versions and menu item loaded onto the control. The following items will be displayed:

Version:	Current software version in the display control
Menu:	Current menu that is loaded into the control
Motor Control Version:	Current software version in the motor control board
Motor Control Boot Version:	Current bootloader software version in the motor control board

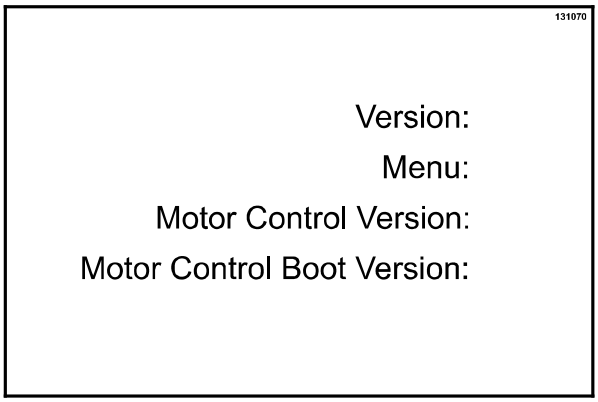

Figure 48

Cleaning After Each Run of Product

Step 1
Using the grill scraper, scrape the grease on the lower grill surface from front to back. **Do not** scrape across the rear of the lower grill surface with the grill scraper.

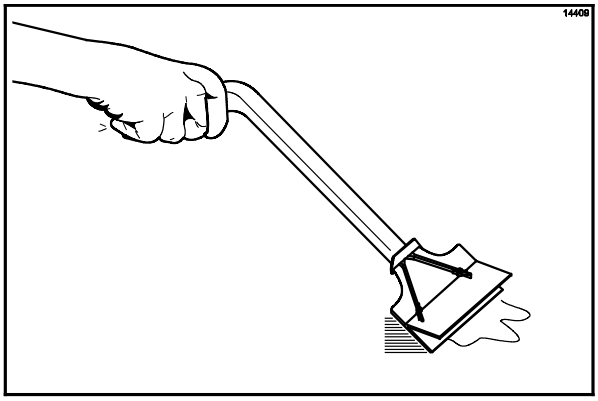

Figure 49

Step 2
Use the wiper squeegee to clean the release sheet on the upper platen. Hold the handle at a slight upward angle. Use a downward motion to clean the sheet. (**Note:** Do not use excessive pressure when wiping the release sheet with the squeegee, as this can scratch or tear the release sheet.)

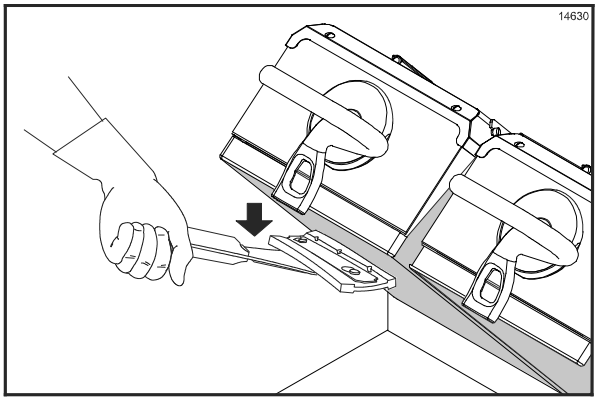

Figure 50

Step 3
Using the wiper squeegee, push the grease at the rear of the lower grill surface into the grease can. **Do not** use the grill scraper for this step.

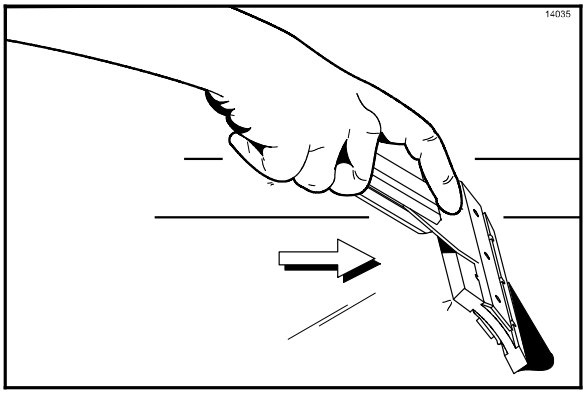

Step 4
Use the grill cloth to clean the back splash plate and the bullnose areas as needed during operation.

Note: To increase the life of the release sheet, wipe it with a clean, sanitizer-soaked, folded grill cloth a minimum of **four times** every hour.

CAUTION: The upper platen surface is very HOT! To prevent burn injuries, use extreme caution when wiping the release sheet.

Daily Cleaning Procedures

Note: The three platen Model L810 has been selected to illustrate the step-by-step procedures. For grills equipped with less than three platens, perform the following steps as appropriate for your grill platen configuration.

Step 1
Raise the upper platen to the OPEN position by pressing the red RAISE button.

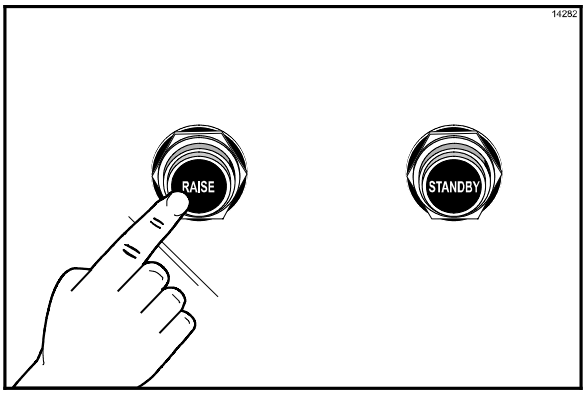

Figure 51

CAUTION: Never use force to raise the upper platen. Damage to components may result. Only use the RAISE button to open the upper platen!

Note: DO NOT turn the power switch to the OFF position while the platens are in the “down” position.

Step 2
Press the CLEAN key. When the cook surfaces reach the proper temperature for cleaning, an alarm will sound and the message “READY TO CLEAN” will be displayed.

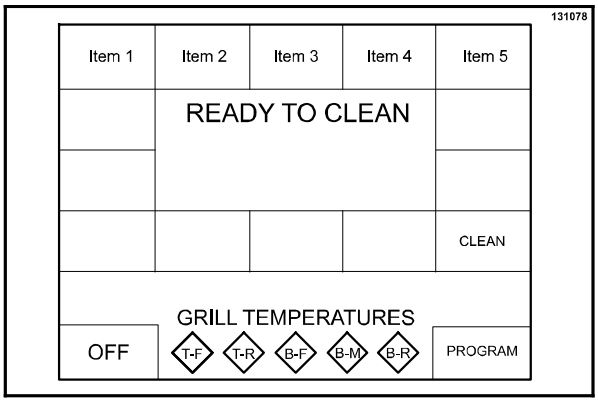

Figure 52

Step 3
Press the RAISE button to cancel the alarm.

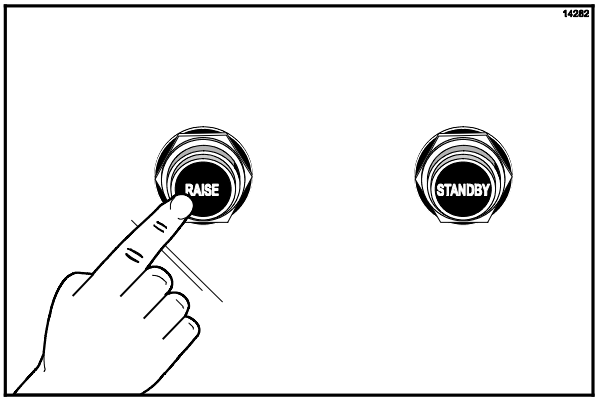

Figure 53

Step 4
Put on heat-resistant gloves.

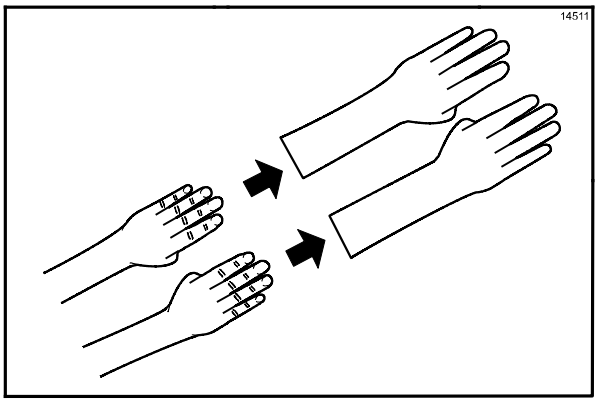

Figure 54

CAUTION: The upper platen surface and release sheets are very hot. To prevent burn injuries, use extreme care.

Step 5
Wipe the exposed surface of the release sheets with a clean, sanitizer-soaked grill cloth.

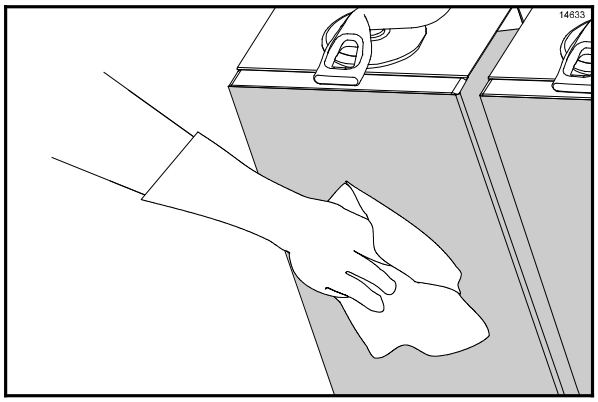

Figure 55

Step 6
Remove the release sheet clip, the release sheet retainer, and the release sheet. Take them to the sink area. Place the release sheet on a clean, flat surface next to the sink.

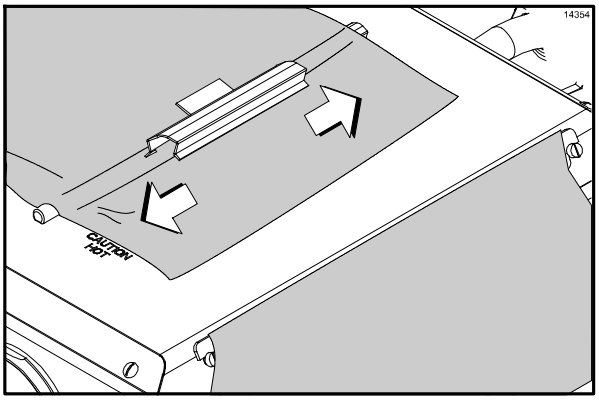

Figure 56

Step 7
Repeat steps 1 through 6 for the remaining upper platen(s).

Step 8
Wash and rinse the clips and retainers in the sink. Set them aside for future use.

Step 9
Leave the release sheets on the clean, flat surface next to the sink until further cleaning is performed. **DO NOT fold, crease, submerge in water, or place them on sharp objects.**

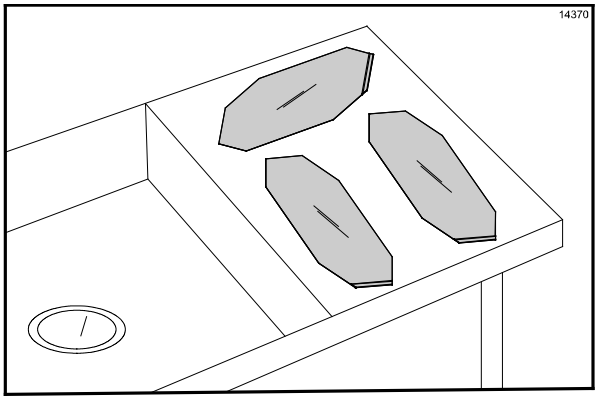

Figure 57

Step 10
Scrape the **lower** grill surface with the grill scraper, from front to back.

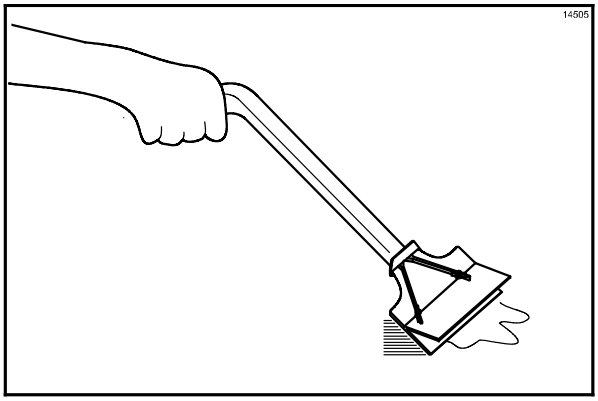

Figure 58

Step 11
Use the wiper squeegee to push residual grease into the grease cans.

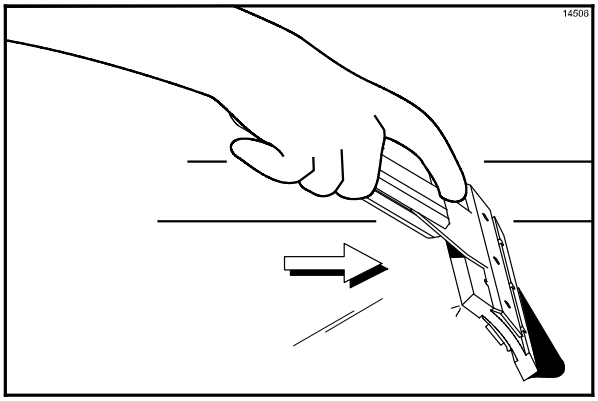

Figure 59

Step 12
Remove, empty, and reinstall the grease cans.

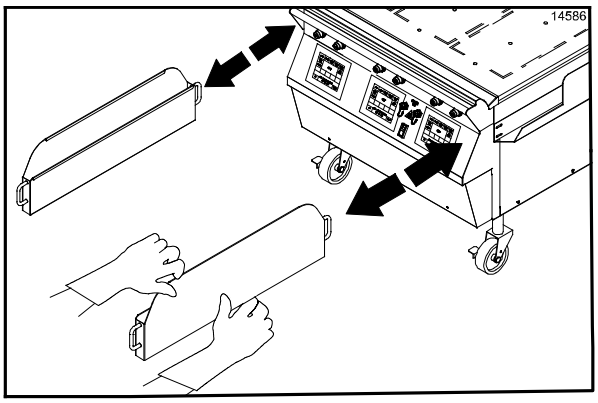

Figure 60

150304

Step 13
Using an approved high temperature grill cleaner, pour approximately 3 oz. (90 ml) onto each 12” (305 mm) cook zone.

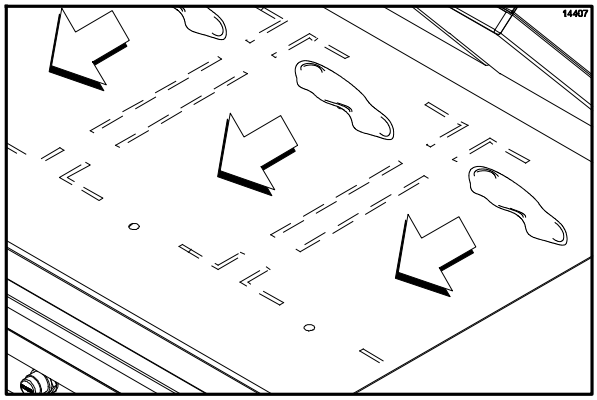

Figure 61

Step 14
Firmly attach the non-abrasive pad to the grill cleaning pad holder.

IMPORTANT! Use the grill cleaning pad and holder identified on page 12 ONLY. Using any other pad and holder will damage the release sheets.

Step 15
Dip the pad into the grill cleaner.

IMPORTANT: DO NOT SCRUB while applying grill cleaner in the following steps:

Step 16
Apply grill cleaner to the front side of the upper platens.

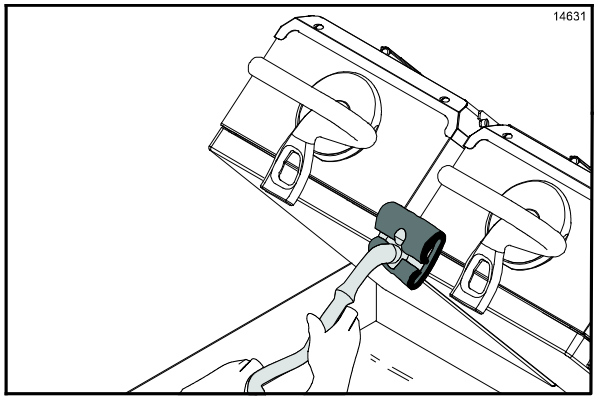

Figure 62

Step 17
Apply grill cleaner to the bottom of the platen handles.

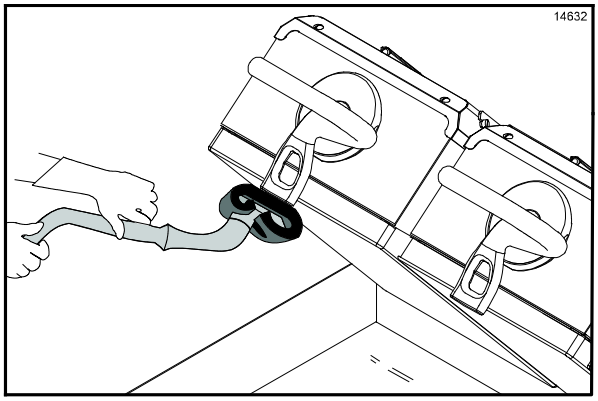

Figure 63

DO NOT use metal scrapers, abrasive pads, screens, or wire brushes. Damage to components may result.

Step 18
Apply grill cleaner to the platen surfaces.

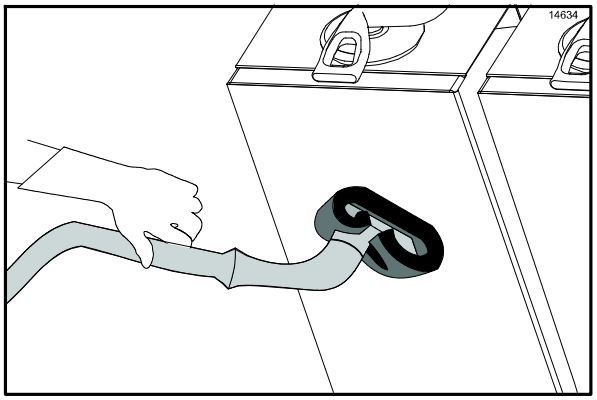

Figure 64

Step 19
Apply grill cleaner to the back side of the upper platens.

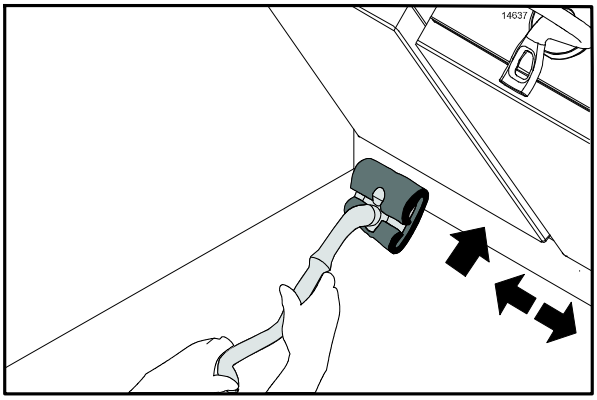

Figure 65

Step 20
Apply grill cleaner to the outer edges of the right and left platens.

Step 21
Press the STANDBY button twice to lower one of the platens.

810 Only: Press the STANDBY button twice to lower the center platen. Apply grill cleaner to both sides of the center platen.

Step 22
Apply grill cleaner to the inner edges of the right and left platens.

Step 23
Press the RAISE button to raise the lowered platen.

Step 24
Lightly scrub the front side of the platens and the bottom of the platen handles with the non-abrasive pad until all soil has been liquified by the grill cleaner. For stubborn soils, apply additional grill cleaner and lightly scrub. **Do not rinse the platens at this time.**

Step 25
Lightly scrub the platen cook surfaces.

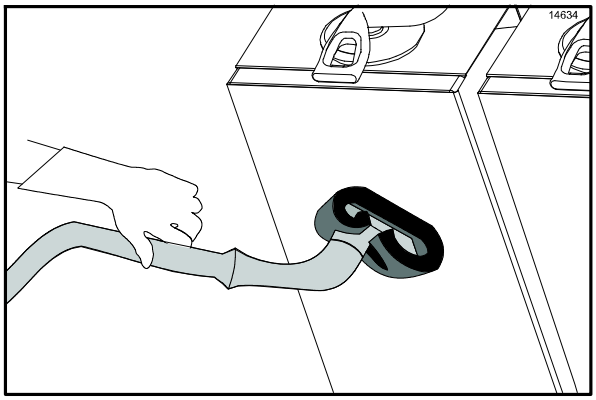

Figure 66

Step 26
Lightly scrub the back side of the upper platens.

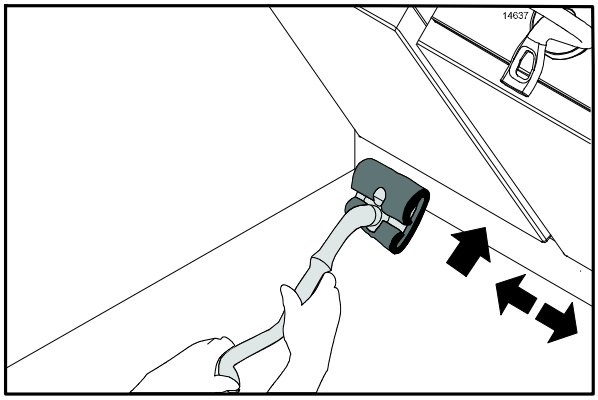

Figure 67

Step 27
Lightly scrub the outer edges of the right and left platens.

Step 28
Press the STANDBY button twice to lower one of the platens.

810 Only: Press the STANDBY button twice to lower the center platen. Lightly scrub both sides of the center platen.

Step 29
Lightly scrub the inner edges of the right and left platens.

Step 30
Press the RAISE button to raise the lowered platen.

Step 31
With a clean, sanitizer-soaked grill cloth, rinse the front, sides, and back of the platen surfaces.

Step 32
With a clean, sanitizer-soaked grill cloth, rinse the bottom of the platen handles, and the front, sides, and back of the platen surfaces.

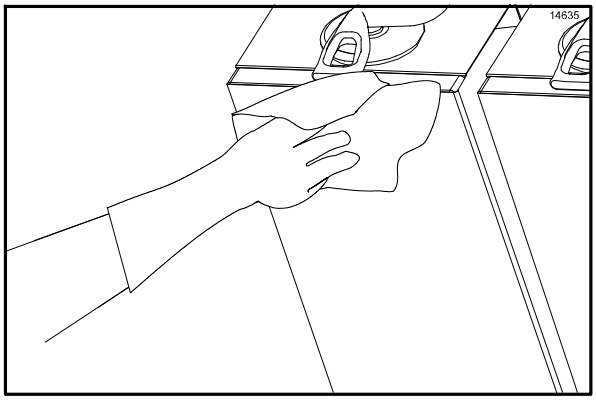

Figure 68

Step 33
With a clean, sanitizer-soaked grill cloth, rinse the platen cook surfaces.

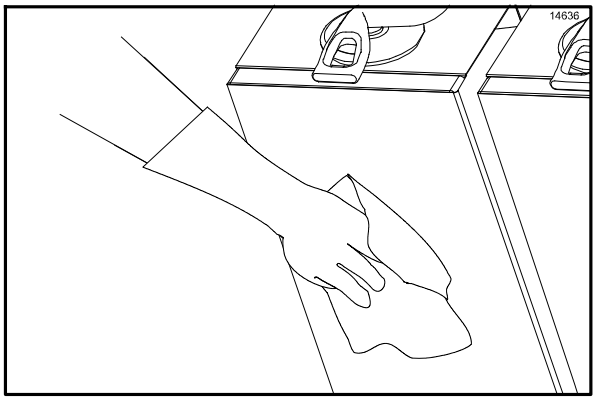

Figure 69

Step 34
Press the STANDBY button twice to lower one of the platens.

810 Only: Press the STANDBY button twice to lower the center platen. With a clean, sanitizer-soaked grill cloth, rinse both sides of the center platen.

Step 35
With a clean, sanitizer-soaked grill cloth, rinse the inner edges of the right and left platens.

Step 36
Press the RAISE button to raise the lowered platen.

Step 37
With a clean, sanitizer-soaked grill cloth, wipe the exterior of all the platens, especially behind the rear of the upper platens (next to the arm assembly).

Step 38
Starting at the back of the lower grill, spread the remaining grill cleaner over the entire surface. **Do not scrub while applying product.**

Step 39
Lightly scrub the surface with the non-abrasive pad until all soil has been liquified by the grill cleaner.

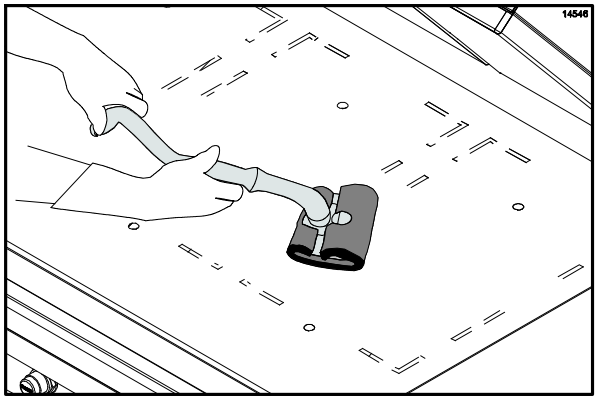

Figure 70

Note: The rear of the upper platen, as well as the tubular arm, can easily be wiped from the front of the unit. If cleaning is performed on a daily basis, there should be no carbon build-up.

IMPORTANT!

DO NOT use a jet of water to clean or rinse the grill.

DO NOT use cold water or ice to cool the upper platen or the lower cook surface.

Failure to follow these instructions may result in:

- serious electrical shock
- burns from hot steam
- liquid collecting inside the grill and destroying electrical components
- damaged cook surfaces

Step 40
Use the squeegee to remove the cleaner from the grill surface.

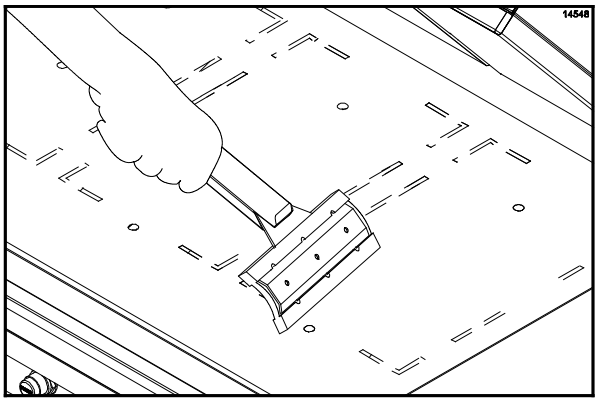

Figure 71

To avoid damaging the grill:

- Never use grill screens on the upper platen or the lower grill surface.
- Never use any abrasives or cleaners other than the approved cleaner.
- Never allow the grill scraper or the abrasive cleaning materials to come in contact with the release sheet.

Step 41
Pour a small amount of lukewarm water on a clean, sanitizer-soaked grill cloth, while holding it over the lower grill surface. Wipe the lower grill surface until all residue is removed.

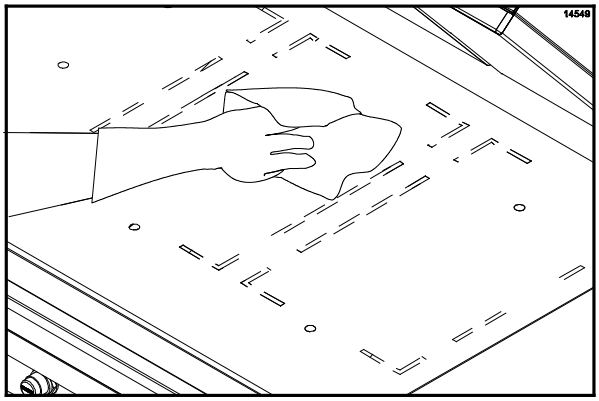

Figure 72

IMPORTANT! Step 42 must be performed using the grill cleaning pad and holder identified on page 12 ONLY. Using any other pad and holder will damage the release sheet.

Note: Contact your local Taylor Distributor to purchase the correct grill cleaning pad and holder. (See page 12.)

Step 42
Place the release sheets flat on the lower grill surface. Gently clean both sides of the sheets with an approved high temperature grill cleaner and the grill cleaning pad and holder.

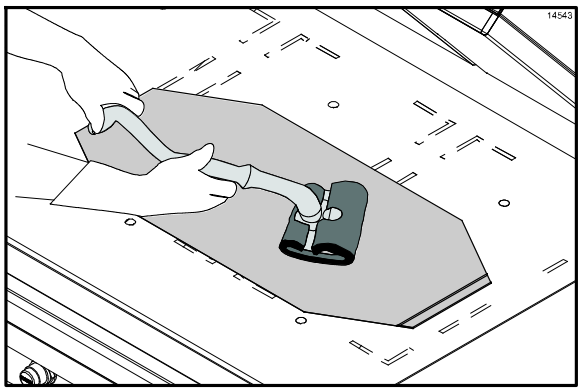

Figure 73

Step 43
Rinse both sides of the release sheets with a clean, sanitizer-soaked grill cloth.

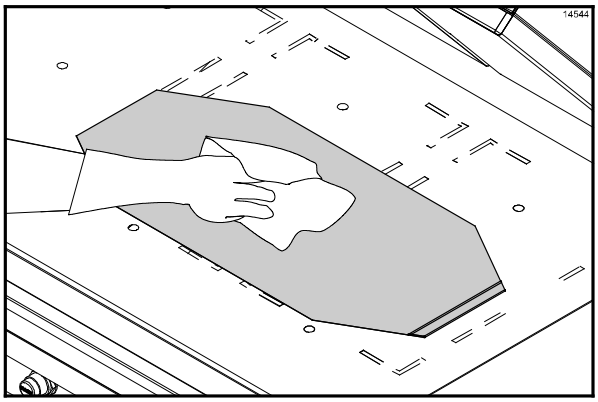

Figure 74

Step 44
Place the release sheets on a clean, flat surface to air dry overnight.

Step 45
Wipe the lower grill surface with a clean, sanitizer-soaked grill cloth. Repeat until no visible soil remains.

Step 46
Remove and empty the grease cans.

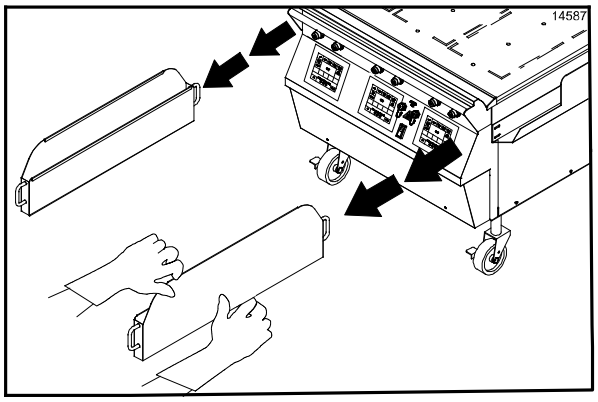

Figure 75

Step 47
Wash, rinse, and reinstall the grease cans.

Step 48
Wipe all areas with a clean, sanitizer-soaked grill cloth.

Step 49
Wipe all exterior panels.

24 Hour Stores Only:

Re-install the release sheets on the opposite side than previously used. Secure the sheets with the release sheet clips and retainers. Start up the grill per instructions starting on page 14.

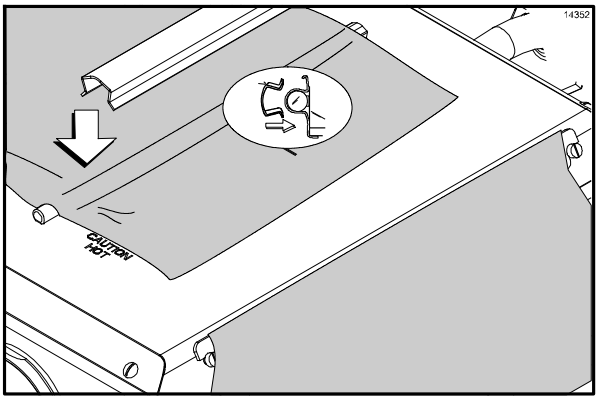

Figure 76

Non-24 Hour Stores Only:

Step 50
Apply a light coat of vegetable oil to the entire **lower** grill surface.

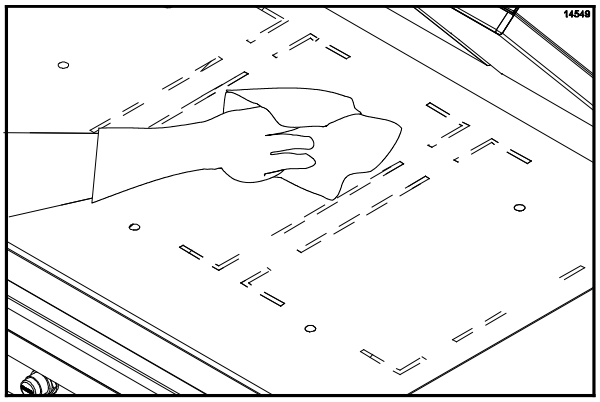

Figure 77

Step 51
Leave the upper platens in the OPEN position overnight.

Step 52
Place the power switch in the OFF position.

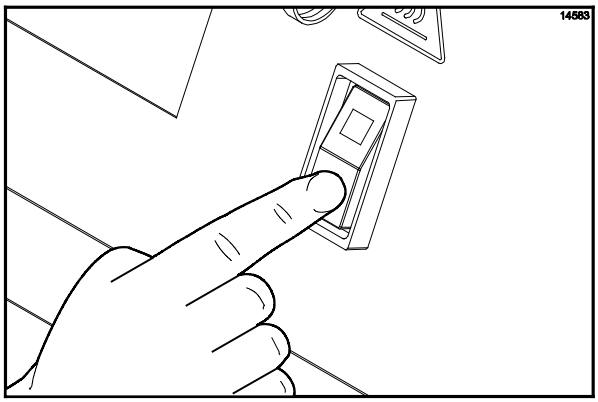

Figure 78

Section 7 Troubleshooting Guide

PROBLEM	PROBABLE CAUSE	REMEDY
1. One side of the grill will not heat. The screen will display, “CALL SERVICE. NO HEAT IN ZONE (indicates specific zone) MAIN POWER OFF & RETRY.”	a. One of the power cords may have come loose or unplugged from the wall during cleaning.	a. Check the power connection.
	b. The restaurant circuit breaker may be off or has tripped.	b. Reset the restaurant circuit breaker.
	c. The contactor is faulty.	c. Call a service technician.
	d. The heater is faulty.	d. Call a service technician.
	e. The high limit switch is faulty.	e. Call a service technician.
	f. The solid state relay is faulty.	f. Call a service technician.
2. One heat zone will not heat. The screen reads “TOO COOL” and displays the specific zone.	a. The interface board is faulty.	a. Call a service technician.
	b. The solid state relay is faulty.	b. Call a service technician.
	c. The control harness is faulty.	c. Call a service technician.
3. One of the heat zones is overheating. The screen reads “TOO HOT” and displays the specific zone.	a. The interface board is faulty.	a. Call a service technician.
	b. The solid state relay is faulty.	b. Call a service technician.
4. The grill will not turn on when power switch is placed in the ON position.	a. The restaurant circuit breaker may be off or has tripped.	a. Reset the circuit breaker.
	b. One of the power cords may have come loose or unplugged from the wall during cleaning.	b. Reconnect the cord.
	c. The fuse in the control box is faulty.	c. Call a service technician.
	d. The power switch is faulty.	d. Call a service technician.

PROBLEM	PROBABLE CAUSE	REMEDY
5. The upper platen will not stay in the STANDBY mode, but will stay in the COOK position.	a. Incorrect use of the Standby button. The Standby button may have been pressed twice too quickly.	a. Press the Standby button twice, one second apart, to lower the platen into the Standby position.
	b. Faulty wire connections.	b. Call a service technician.
6. The upper platen will not stay in the COOK or STANDBY position.	a. Temperature is insufficient to satisfy the indicator LED's.	a. Wait until the LED indicators turn green. This can happen during the first 20 minutes after the grill has been turned on or after a water cleaning.
	b. The control harness is faulty.	b. Call a service technician.
	c. The interface board is faulty.	c. Call a service technician.
	d. The latch switch is faulty.	d. Call a service technician.
	e. The latch solenoid is faulty.	e. Call a service technician.
	f. The processor control is faulty.	f. Call a service technician.
	g. The pneumatic system is faulty.	g. Call a service technician.
7. The upper platen will not stay in the COOK position, but will stay in the STANDBY mode.	a. The product is out of specification.	a. Product must be within specification (proper thickness, shape, etc.).
	b. The processor control is not set properly.	b. Call a service technician.
8. The upper platen opens too rapidly.	a. The orifice/check valve is incorrect or missing.	a. Call a service technician.
9. The screen displays “PLATEN NOT LATCHED. CALL SERVICE-LATCH. IS AN OBJECT STUCK UNDER THE PLATEN? IF NO, COOK FLAT ITEMS ONLY.”	a. An item may be under platen, preventing it from latching.	a. Remove the item and try again.
	b. The pneumatic system is faulty.	b. Call a service technician.
	c. The latch switch is faulty.	c. Call a service technician.
	d. The latch solenoid is faulty.	d. Call a service technician.

PROBLEM	PROBABLE CAUSE	REMEDY
10. The display reads “UPPER PLATEN STUCK. CALL SERVICE-LATCH. IF THE PLATEN IS OPEN, COOK FLAT ITEMS ONLY.”	a. The arm bearings are dirty.	a. Call a service technician.
	b. The air cylinder is faulty.	b. Call a service technician.
	c. Plugged air lines to cylinders.	c. Call a service technician.
11. The platen will not lower to preset gap height.	a. Excessive carbon build-up on the shields.	a. Follow closing procedures to properly clean and remove carbon build-up from the shields.
	b. Defective motor interface board.	b. Call a service technician.
	c. Loose harness connections.	c. Call a service technician.
	d. Defective main display controller.	d. Call a service technician.
	e. Defective motors and cables.	e. Call a service technician.
12. The product is under-cooked or overcooked.	a. The release sheet is worn.	a. Replace the release sheet.
	b. Incorrect cooking time.	b. Reset the processor control for the correct time.
	c. Incorrect temperature setting.	c. Adjust the processor control to the proper setting.
	d. The upper platen or lower grill surface is not clean and/or has carbon build-up.	d. Follow closing procedures to properly clean the upper platen and the lower grill surface and to remove carbon build-up.
	e. There is a grease or carbon build-up on the bottom of the upper platen handles.	e. Follow closing procedures to properly clean and remove carbon build-up from the bottom of the platen handles.
	f. Product is out of specification.	f. Product must be within specified tolerances (thickness, shape, raw or frozen temperatures).
	g. Product may have accumulated ice crystals.	g. Ensure that open boxes are kept closed and that all the product is covered during storage.

PROBLEM	PROBABLE CAUSE	REMEDY
12. The product is under-cooked or overcooked. *(Cont'd.)*	h. Cooking procedures may have been followed incorrectly.	h. Ensure that the product was removed immediately after the cook cycle ended. Double check that the correct product was selected from the main menu screen.
	i. Other equipment may be at fault.	i. Check temperatures of all meat storage freezers. Make sure they are set to 0°F (-18°C). Check temperatures of all meat storage refrigerators. Make sure they are set to 38-42°F (3-5°C).
	j. The preset gap height is incorrect.	j. Validate the product settings (time, temperature, gap, etc.) are programmed in the controller correctly. Always consult with the owner and Regional Manager before changing the control settings. See guide for programming instructions.
	k. The heating zone is not heating.	k. Call a service technician.
13. The display reads “PROBE OPEN” and displays the specific zone.	a. The thermocouple or the thermocouple interface board is faulty.	a. Call a service technician.
14. The product is not cooking evenly.	a. The upper platen or lower grill surface is not clean and/or has carbon build-up.	a. Follow closing procedures to properly clean the upper platen and the lower grill surface and to remove carbon build-up.
	b. There is a grease or carbon build-up on the bottom of the upper platen handles.	b. Follow closing procedures to properly clean and remove carbon build-up from the bottom of the platen handles.
	c. The release sheet is worn.	c. Replace release sheet.
	d. Release sheet may be too loose, causing poor heat transfer into product.	d. Readjust the sheet to ensure a snug fit. It should be tight enough to prevent creasing, sliding, or catching by the squeegee. See guide for proper release sheet installation.

PROBLEM	PROBABLE CAUSE	REMEDY
14. The product is not cooking evenly. *(Cont'd.)*	e. The product is out of specification.	e. Product must be within specification (proper thickness, shape, etc.).
	f. The platen is not level.	f. Call a service technician.
	g. The preset gap height is incorrect.	g. Call a service technician.
	h. Air pressure is not high enough.	h. Call a service technician.
15. The display reads “HOME SWITCH STUCK ON. CLAM ITEMS BLOCKED. CALL FOR SERVICE.”	a. Two sided cooking options are blocked.	a. Turn the control off and then back on to clear the fault.
	b. Defective stepper motor.	b. Call a service technician.
	c. Defective stepper motor wire harness.	c. Call a service technician.
	d. Defective home switch.	d. Call a service technician.
	e. Defective motor control.	e. Call a service technician.
16. The display reads “HOME SWITCH NOT SEEN. CLAM ITEMS BLOCKED. CALL FOR SERVICE.”	a. Defective motor control.	a. Call a service technician.
	b. Defective stepper motor.	b. Call a service technician.
	c. Defective stepper motor wire harness.	c. Call a service technician.
	d. Defective home switch.	d. Call a service technician.
	e. Broken platen cable.	e. Call a service technician.

Section 8 Limited Warranty on Equipment

TAYLOR COMPANY LIMITED WARRANTY ON CROWN SERIES GRILLS

Taylor Company, a division of Carrier Commercial Refrigeration, Inc. ("Taylor") is pleased to provide this limited warranty on new Taylor-branded Crown Series grill equipment available from Taylor to the market generally (the "Product") to the original purchaser only.

LIMITED WARRANTY

Taylor warrants the Product against failure due to defect in materials or workmanship under normal use and service as follows. All warranty periods begin on the date of original Product installation. If a part fails due to defect during the applicable warranty period, Taylor, through an authorized Taylor distributor or service agency, will provide a new or re-manufactured part, at Taylor's option, to replace the failed defective part at no charge for the part. Except as otherwise stated herein, these are Taylor's exclusive obligations under this limited warranty for a Product failure. This limited warranty is subject to all provisions, conditions, limitations and exclusions listed below and on the reverse (if any) of this document.

Product	Part	Limited Warranty Period
Taylor Crown Series Grills	Air compressor (excluding tank, solenoid, pressure switch, check valve, air cylinder, fittings, and airline)	Two (2) years
	The upper platen's aluminum casting and shroud only, and excluding all other upper platen components, including those internal to the upper platen	Two (2) years
	Microprocessor control	Three (3) years
	Parts not otherwise listed in this table or excluded below	One (1) year

LIMITED WARRANTY CONDITIONS

1. If the date of original installation of the Product cannot be verified, then the limited warranty period begins ninety (90) days from the date of Product manufacture (as indicated by the Product serial number). Proof of purchase may be required at time of service.
2. This limited warranty is valid only if the Product is installed and all required service work on the Product is performed by an authorized Taylor distributor or service agency, and only if genuine, new Taylor parts are used.
3. Installation, use, care, and maintenance must be normal and in accordance with all instructions contained in the Taylor Operator's Manual.
4. Defective parts must be returned to the authorized Taylor distributor or service agency for credit.

LIMITED WARRANTY EXCEPTIONS

This limited warranty does **not** cover:

1. Labor or other costs incurred for diagnosing, repairing, removing, installing, shipping, servicing or handling of defective parts, replacement parts, or new Products.
2. Normal maintenance and cleaning as outlined in the Taylor Operator's Manual, including cleaning of carbon and grease buildup.
3. Required service, whether cleaning or general repairs, to return the Product's cooking surface assemblies, including the upper platen and lower plate, to an operational condition to achieve proper cooking or allow proper assembly of release sheets and clips as a result of grease build-up on the cooking surfaces, including but not limited to the platen and plate, sides of the shroud or top of the shroud.

131205

4. Replacement of the Product's cooking surfaces, including the upper platen and lower plate, due to pitting or corrosion (or in the case of the upper platen, due to loss of plating) as a result of damage due to the impact of spatulas or other small wares used during the cooking process or as a result of the use of cleaners, cleaning materials or cleaning processes not approved for use by Taylor.
5. Replacement of wear items designated as Class "000" parts in the Taylor Operator's Manual, as well as any release sheets and clips.
6. External hoses, electrical power supplies, and machine grounding.
7. Parts not supplied or designated by Taylor, or damages resulting from their use.
8. Return trips or waiting time required because a service technician is prevented from beginning warranty service work promptly upon arrival.
9. Costs incurred to address food safety issues when the technician determines food safety standards are met and the Product gaps and grill temperatures are within specification.
10. Failure, damage or repairs due to faulty installation, misapplication, abuse, no or improper servicing, unauthorized alteration or improper operation or use as indicated in the Taylor Operator's Manual, including but not limited to the failure to use proper assembly and cleaning techniques, tools, or approved cleaning supplies .
11. Failure, damage or repairs due to theft, vandalism, wind, rain, flood, high water, water, lightning, earthquake or any other natural disaster, fire, corrosive environments, insect or rodent infestation, or other casualty, accident or condition beyond the reasonable control of Taylor; operation above or below the electrical or gas specification of the Product; or components repaired or altered in any way so as, in the judgment of the Manufacturer, to adversely affect performance, or normal wear or deterioration.
12. Any Product purchased over the Internet.
13. Failure to start due to voltage conditions, blown fuses, open circuit breakers, or damages due to the inadequacy or interruption of electrical or gas service.
14. Electricity, gas or other fuel costs, or increases in electricity, gas or other fuel costs from any reason whatsoever.
15. **ANY SPECIAL, INDIRECT OR CONSEQUENTIAL PROPERTY OR COMMERCIAL DAMAGE OF ANY NATURE WHATSOEVER.** Some jurisdictions do not allow the exclusion of incidental or consequential damages, so this limitation may not apply to you.

This limited warranty gives you specific legal rights, and you may also have other rights which vary from jurisdiction to jurisdiction.

LIMITATION OF WARRANTY

THIS LIMITED WARRANTY IS EXCLUSIVE AND IS IN LIEU OF ALL OTHER WARRANTIES, CONDITIONS AND/OR REMEDIES UNDER THE LAW, INCLUDING ANY IMPLIED WARRANTIES OR CONDITIONS OF MERCHANTABILITY OR FITNESS FOR A PARTICULAR PURPOSE. THE ORIGINAL OWNER'S SOLE REMEDY WITH RESPECT TO ANY PRODUCTS SHALL BE REPAIR OR REPLACEMENT OF DEFECTIVE COMPONENTS UNDER THE TERMS OF THIS LIMITED WARRANTY. ALL RIGHTS TO CONSEQUENTIAL OR INCIDENTAL DAMAGES (INCLUDING CLAIMS FOR LOST SALES, LOST PROFITS, PRODUCT LOSS, PROPERTY DAMAGES OR SERVICE EXPENSES) ARE EXPRESSLY EXCLUDED. THE EXPRESS WARRANTIES MADE IN THIS LIMITED WARRANTY MAY NOT BE ALTERED, ENLARGED, OR CHANGED BY ANY DISTRIBUTOR, DEALER, OR OTHER PERSON, WHATSOEVER.

LEGAL REMEDIES

The owner **must** notify Taylor in writing, by certified or registered letter to the following address, of any defect or complaint with the Product, stating the defect or complaint and a specific request for repair, replacement, or other correction of the Product under warranty, mailed at least thirty (30) days before pursuing any legal rights or remedies.

Taylor Company
a division of Carrier Commercial Refrigeration, Inc.
750 N. Blackhawk Blvd.
Rockton, IL 61072, U.S.A.

Section 9 Limited Warranty on Parts

TAYLOR COMPANY LIMITED WARRANTY ON TAYLOR GENUINE PARTS

Taylor Company, a division of Carrier Commercial Refrigeration, Inc. ("Taylor") is pleased to provide this limited warranty on new Taylor genuine replacement components and parts available from Taylor to the market generally (the "Parts") to the original purchaser only.

LIMITED WARRANTY

Taylor warrants the Parts against failure due to defect in materials or workmanship under normal use and service as follows. All warranty periods begin on the date of original installation of the Part in the Taylor unit. If a Part fails due to defect during the applicable warranty period, Taylor, through an authorized Taylor distributor or service agency, will provide a new or re-manufactured Part, at Taylor's option, to replace the failed defective Part at no charge for the Part. Except as otherwise stated herein, these are Taylor's exclusive obligations under this limited warranty for a Part failure. This limited warranty is subject to all provisions, conditions, limitations and exclusions listed below and on the reverse (if any) of this document.

Part's Warranty Class Code or Part	Limited Warranty Period
Class 103 Parts[1]	Three (3) months
Class 212 Parts[2]	Twelve (12) months
Class 512 Parts	Twelve (12) months
Class 000 Parts	No warranty
Taylor Part #072454 (Motor-24VDC *C832/C842*)	Four (4) years

LIMITED WARRANTY CONDITIONS

1. If the date of original installation of the Part cannot be otherwise verified, proof of purchase may be required at time of service.
2. This limited warranty is valid only if the Part is installed and all required service work in connection with the Part is performed by an authorized Taylor distributor or service agency.
3. The limited warranty applies only to Parts remaining in use by their original owner at their original installation location in the unit of original installation.
4. Installation, use, care, and maintenance must be normal and in accordance with all instructions contained in the Taylor Operator's Manual.
5. Defective Parts must be returned to the authorized Taylor distributor or service agency for credit.
6. This warranty is not intended to shorten the length of any warranty coverage provided pursuant to a separate Taylor Limited Warranty on freezer or grill equipment.
7. The use of any refrigerant other than that specified for the unit in which the Part is installed will void this limited warranty.

[1, 2] Except that Taylor Part #032129SER2 (Compressor-Air-230V SERV) and Taylor Part #075506SER1 (Compressor-Air-115V 60HZ) shall have a limited warranty period of twelve (12) months when used in Taylor freezer equipment and a limited warranty period of two (2) years when used in Taylor grill equipment.

LIMITED WARRANTY EXCEPTIONS

This limited warranty does **not** cover:

1. Labor or other costs incurred for diagnosing, repairing, removing, installing, shipping, servicing or handling of defective Parts, replacement Parts, or new Parts.
2. Normal maintenance, cleaning and lubrication as outlined in the Taylor Operator's Manual, including cleaning of condensers or carbon and grease buildup.
3. Required service, whether cleaning or general repairs, to return the cooking surface assemblies, including the upper platen and lower plate, to an operational condition to achieve proper cooking or allow proper assembly of release sheets and clips as a result of grease build-up on the cooking surfaces, including but not limited to the platen and plate, sides of the shroud or top of the shroud.
4. Replacement of cooking surfaces, including the upper platen and lower plate, due to pitting or corrosion (or in the case of the upper platen, due to loss of plating) as a result of damage due to the impact of spatulas or other small wares used during the cooking process or as a result of the use of cleaners, cleaning materials or cleaning processes not approved for use by Taylor.
5. Replacement of wear items designated as Class "000" Parts in the Taylor Operator's Manual, as well as any release sheets and clips for the Product's upper platen assembly.
6. External hoses, electrical power supplies, and machine grounding.
7. Parts not supplied or designated by Taylor, or damages resulting from their use.
8. Return trips or waiting time required because a service technician is prevented from beginning warranty service work promptly upon arrival.
9. Failure, damage or repairs due to faulty installation, misapplication, abuse, no or improper servicing, unauthorized alteration or improper operation or use as indicated in the Taylor Operator's Manual, including but not limited to the failure to use proper assembly and cleaning techniques, tools, or approved cleaning supplies.
10. Failure, damage or repairs due to theft, vandalism, wind, rain, flood, high water, water, lightning, earthquake or any other natural disaster, fire, corrosive environments, insect or rodent infestation, or other casualty, accident or condition beyond the reasonable control of Taylor; operation above or below the gas, electrical or water supply specification of the unit in which a part is installed; or Parts or the units in which they are installed repaired or altered in any way so as, in the judgment of Taylor, to adversely affect performance, or normal wear or deterioration.
11. Any Part purchased over the Internet.
12. Failure to start due to voltage conditions, blown fuses, open circuit breakers, or damages due to the inadequacy or interruption of electrical service.
13. Electricity, gas or other fuel costs, or increases in electricity or fuel costs from any reason whatsoever.
14. Damages resulting from the use of any refrigerant other than that specified for the unit in which the Part is installed will void this limited warranty.
15. Any cost to replace, refill or dispose of refrigerant, including the cost of refrigerant.
16. **ANY SPECIAL, INDIRECT OR CONSEQUENTIAL PROPERTY OR COMMERCIAL DAMAGE OF ANY NATURE WHATSOEVER.** Some jurisdictions do not allow the exclusion of incidental or consequential damages, so this limitation may not apply to you.

This limited warranty gives you specific legal rights, and you may also have other rights which vary from jurisdiction to jurisdiction.

LIMITATION OF WARRANTY

THIS LIMITED WARRANTY IS EXCLUSIVE AND IS IN LIEU OF ALL OTHER WARRANTIES, CONDITIONS AND/OR REMEDIES UNDER THE LAW, INCLUDING ANY IMPLIED WARRANTIES OR CONDITIONS OF MERCHANTABILITY OR FITNESS FOR A PARTICULAR PURPOSE. THE ORIGINAL OWNER'S SOLE REMEDY WITH RESPECT TO ANY PRODUCTS SHALL BE REPAIR OR REPLACEMENT OF DEFECTIVE PARTS UNDER THE TERMS OF THIS LIMITED WARRANTY. ALL RIGHTS TO CONSEQUENTIAL OR INCIDENTAL DAMAGES (INCLUDING CLAIMS FOR LOST SALES, LOST PROFITS, PRODUCT LOSS, PROPERTY DAMAGES OR SERVICE EXPENSES) ARE EXPRESSLY EXCLUDED. THE EXPRESS WARRANTIES MADE IN THIS LIMITED WARRANTY MAY NOT BE ALTERED, ENLARGED, OR CHANGED BY ANY DISTRIBUTOR, DEALER, OR OTHER PERSON, WHATSOEVER.

LEGAL REMEDIES

The owner **must** notify Taylor in writing, by certified or registered letter to the following address, of any defect or complaint with the Part, stating the defect or complaint and a specific request for repair, replacement, or other correction of the Part under warranty, mailed at least thirty (30) days before pursuing any legal rights or remedies.

Taylor Company
a division of Carrier Commercial Refrigeration, Inc.
750 N. Blackhawk Blvd.
Rockton, IL 61072, U.S.A.