TAYLOR
United Technologies

Item No. _____

L820

Electric Two-Sided Grill

CROWN®
Jewel OF COOKING

Features

One touch menu selection automatically provides accurate TIME, TEMPERATURE, and GAP settings for every product.

Programmable Controls

Microprocessor controls are programmable for simplified operator operation. Offers flexibility for future menu items and product specification changes at the restaurant level.

External USB Port

External USB port allows user access to upload new menu and promotional items. Menu changes can be sent electronically to other store locations saving time and eliminating operator error.

Upper Platens

Two upper platens will close automatically to the preset gap setting with the touch of one button. Air cylinder system provides quiet, simple, trouble-free operation of the upper platen. As a safety feature, platen will automatically open at loss of power, or if an obstruction is detected.

Precise Automatic Gapping

Solid platform with 3-point reference plane and fixed (home) reference point. Once programmed, the upper platen automatically achieves accurate and consistent gaps, every time. Precise, repeatable gapping assures product safety and better quality finished product.

Cooking Zones

Two separately controlled cooking zones. Each zone has three independent heating elements, and two in the upper platen to assure even temperatures and quick recovery.

Side-To-Side Release Material

Protects entire upper platen cooking surface and makes cleaning easy. Improved installation and removal process away from hot surfaces.

Patty Cook Position Placement Guide

Lower cooking surface is etched for a permanent patty placement guide for two-sided cooking.

NSF Standard 4 | c UL us LISTED E84050 | CE Selected 50 Hz. Models

Rockton, Illinois 61072
800-255-0626
Phone 815-624-8333 Fax 815-624-8000
www.taylor-company.com
e-mail: info@taylor-company.com

International Office
Taylor Company S.r.l.
Roma, Italy
Tel: **+39-06-420-12002** Fax: +39-06-420-12034
e-mail: romeoff@taylor-company.com

ISO 9001:2008
Registered Firm

L820 Electric Two-Sided Grill

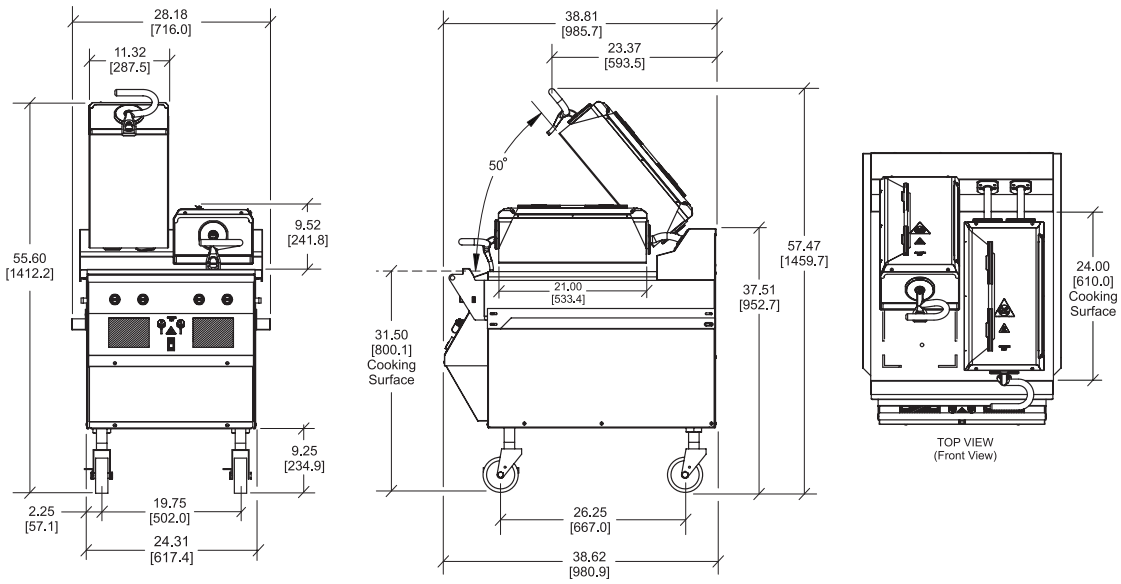

FIGURES IN BRACKETS INDICATE MILLIMETERS / DECIMAL AND FRACTIONAL DIMENSIONS EQUAL TO (PLUS OR MINUS 1/16 INCH [1.5mm]).
MACHINE HEIGHT CAN VARY (PLUS OR MINUS 2.5 INCHES [63.5 MM]) WITH CASTER HEIGHT ADJUSTMENT / SIDE GREASE CANS NOT SHOWN.

Weights	lbs.	kgs.
Net	670	304.0
Crated	751	340.6
	cu. ft.	**cu. m.**
Volume	39.0	1.11

Dimensions	in.	mm.
Width	28-3/16	716
Depth	38-13/16	986
Height	55 to 60	1397 to 1524
Cooking Surface Height	29 to 34	737 to 864
Floor Clearance	6-3/4 to 11-3/4	172 to 299

Casters may be adjusted.

Electrical	Amps Per Cord	Total kW	Cord Supplied with NEMA Plug
208/60/3	48	17	NEMA 15-60P
220-240/50/3	44	17	NEMA 15-60P
240/60/3	43	17	NEMA 15-60P
400/50/3N~	14 (2)	17	**

This unit may be manufactured in other electrical characteristics. Refer to the local Taylor Distributor for availability.

(For exact electrical information, always refer to the data label of the unit.)

** Plug supplied by customer

Bidding Specs

Electrical: Volt _____ Hz _____ ph _____

Neutral: ☐Yes ☐No | **Cooling**: ☐Air ☐Water ☐NA

Options: _____

Specifications

Electrical

See the Electrical chart for the proper electrical requirements. Manufactured to be permanently connected. Consult your local Taylor distributor for receptacle specifications as local codes allow. Restraining cable included.

Accessories

- Cleaner (1qt)
- Grease cans (two, mount on each side)
- Release sheets; includes clips and retainer (one box of 9)
- Squeegee (one)

Options

- Cleaning Pads (10 qty.)
- Cleaning Pad Holder
- Gap Gage (0.255)
- Grill Scraper
- Tool Holder

Continuing research results in steady improvements; therefore, these specifications are subject to change without notice.

TAYLOR
United Technologies

Taylor Company,
Rockton, Illinois 61072
815-624-8333 **800-255-0626** Fax 815-624-8000
www.taylor-company.com