ASADO

PARILLA GRILL

SPAS.PGA.EL9.0800

Asado parillas offer a unique style of cooking that originated with the cowboys of Southern Brazil & Argentina called Gaucho's. Meats are slowly cooked over natural wood charcoal resulting in flavoursome, succulent & tender cuts that are enjoyed by restaurant customers worldwide.

The electric powered lift grill is ideal for cooking of steaks & smaller pieces of meat over while still maintaining the authentic woodfired barbeque flavour.

Features

- Grill height adjustable from 950mm to 1550mm
- Electric powered elevation of cooking grill
- Joystick grill height control
- Cantilevered grill frame folds up for clear access to firebox
- Removable cooking grids that fit dishwasher racks
- Convenient cupboard for storage under

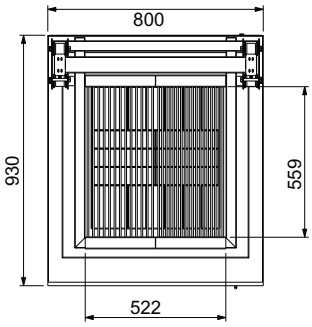

Model

- Cabinet is 800mm (W) x 930mm (D) and matches Electrolux 900 series profile
- Grill Frame Cooking Area 522mm (W) x 559mm (D)
- 10Amp 240V, Plug and lead supplied

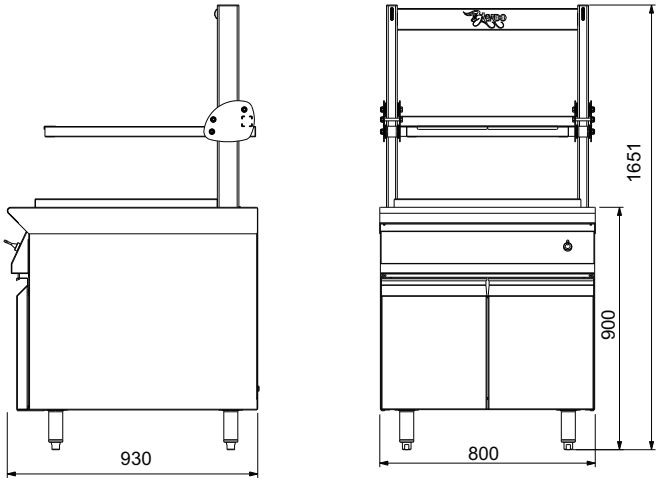

Note to designers & installers :
Live fuel grills have specific ventilation requirements
It is the responsibility of designers & installers to ensure that ventilation of live fuel grills is in accordance with the Building Code of Australia as it is referenced to AS1668.2

We reserve the right to alter specifications of products without notice. All dimensions are in mm.

Stoddart Manufacturing
Ph : 1300 791 954
Web : www.stoddart.com.au
Email : fse@stoddart.com.au

STODDART