600mm Gas Barbeque

Model CB6

INSTALLATION AND OPERATION MANUAL

For use in GB, IE & DK

230582-8

MANUFACTURED BY

Moffat Limited
Christchurch
New Zealand

INTERNATIONAL CONTACTS

AUSTRALIA

Moffat Pty Limited

E.Mail:	vsales@moffat.com.au
Main Office:	(tel): +61 (03) 9518 3888
	(fax): +61 (03 9518 3833
Service:	(tel): 1800 622 216
Spares:	(tel): 1800 337 963
Customer Service:	(tel): 1800 335 315
	(fax): 1800 350 281

CANADA

Serve Canada

Web:	www.servecanada.com
E.Mail:	info@servecanada.com
Sales:	(tel): 800 551 8795 (Toll Free)
Service:	(tel): 800 263 1455 (Toll Free)

NEW ZEALAND

Moffat Limited

Web:	www.moffat.co.nz
E.Mail:	sales@moffat.co.nz
Main Office:	(tel): 0800 663328

UNITED KINGDOM

Blue Seal

Web:	www.blue-seal.co.uk
E.Mail:	sales@blue-seal.co.uk
Sales:	(tel): +44 121 327 5575
	(fax): +44 121 327 9711
Spares:	(tel): +44 121 322 6640
	(fax): +44 121 327 9201
Service:	(tel): +44 121 322 6644
	(fax): +44 121 327 6257

UNITED STATES

Moffat

Web:	www.moffat.com
Sales:	(tel): 800 551 8795 (Toll Free)
	(tel): +1 336 661 1556
	(fax): +1 336 661 9546
Service:	(tel): 800 858 4477 (Toll Free)
	(tel): +1 366 661 1556
	(fax): +1 336 661 1660

REST OF WORLD

Moffat Limited

Web:	www.moffat.co.nz
E.Mail:	export@moffat.co.nz

The reproduction or copying of any part of this manual by any means whatsoever is strictly forbidden unless authorized previously in writing by the manufacturer.

In line with policy to continually develop and improve its products, Moffat Ltd. reserves the right to change the specifications and design without prior notice.

© Copyright Moffat Ltd. July 2012.

Contents

CB6 Gas Barbeque

Part 1 Introduction 2

Part 2 Specifications 3

Part 3 Installation.....4

Part 4 Operation.....6

Part 5 Cleaning and Maintenance 7

Part 6 Gas Conversion.....9

Part 7 Replacement Parts List.....13

Part 1 Introduction

We are confident that you will be delighted with your ***Cobra Series*** Barbeque, and it will become a most valued appliance in your commercial kitchen.
To ensure you receive the utmost benefit from your new ***Cobra*** Appliance, there are two important things you can do.

Firstly:

Please read this instruction book carefully and follow the directions given. The time taken will be well spent.

Secondly:

If you are unsure of any aspect of the installation, instructions or performance of your appliance, contact your ***Cobra Series*** appliance dealer promptly. In many cases a phone call could answer your question.

CE Only:

These instructions are only valid if the country code appears on the appliance. If the code does not appear on the appliance, refer to the supplier of this appliance to obtain the technical instructions for adapting the appliance to the conditions for use in that country.

WARNING:

IMPROPER INSTALLATION, ADJUSTMENT, ALTERATION, SERVICE OR MAINTENANCE CAN CAUSE PROPERTY DAMAGE, INJURY OR DEATH. READ THE INSTALLATION, OPERATING AND MAINTENANCE INSTRUCTIONS THOROUGHLY BEFORE INSTALLING OR SERVICING THIS APPLIANCE.

WARNING:

INSTRUCTIONS TO BE FOLLOWED IN THE EVENT THE USER SMELLS GAS ARE TO BE POSTED IN A PROMINENT LOCATION. THIS INFORMATION SHALL BE OBTAINED BY CONSULTING THE LOCAL GAS SUPPLIER.

WARNING:

GREAT CARE MUST BE TAKEN BY THE OPERATOR TO USE THE EQUIPMENT SAFELY TO GUARD IT AGAINST RISK OF FIRE.

- **THE APPLIANCE MUST NOT BE LEFT ON UNATTENDED.**
- **IT IS RECOMMENDED THAT A REGULAR INSPECTION IS MADE BY A COMPETENT SERVICEMAN TO ENSURE CORRECT AND SAFE OPERATION OF YOUR APPLIANCE IS MAINTAINED.**
- **DO NOT STORE OR USE GASOLINE OR OTHER FLAMMABLE VAPOURS OR LIQUIDS IN THE VICINITY OF THIS OR ANY OTHER APPLIANCE.**
- **DO NOT SPRAY AEROSOLS IN THE VICINITY OF THIS APPLIANCE WHILE IT IS IN OPERATION.**

CAUTION:

This appliance is;

- **For professional use and is to be used by qualified persons only.**
- **Only qualified service persons are to carry out installation, servicing and gas conversion operations.**
- **Components having adjustments protected (e.g. paint sealed) by the manufacturer should not be adjusted by the user / operator.**
- **DO NOT operate the appliance without the legs supplied fitted.**

Model Covered in this Specification -
CB6 GAS BARBEQUE.

General

A commercial heavy duty, fully modular, gas fired barbeque created for modular kitchens supplied in a 600mm wide option. The barbeque is fitted with branding grates and aluminised steel burners, with individual 'Hi'-'Lo' gas control to each burner. The burners are fitted with piezo ignited permanent pilot and flame failure protection for each burner.

Gas Supply Requirements

- Non - CE Only:

	Natural Gas	LP Gas (Propane)
Input Rating (N.H.G.C.)	66.0 MJ/hr (62,500 Btu/hr)	66.0 MJ/hr (62,500 Btu/hr)
Supply Pressure	1.13 - 3.40 kPa (4.5" - 13.5" w.c.)	2.75 - 4.50 kPa (11" - 18" w.c.)
Burner Operating Pressure	0.95 kPa (*) (3.8" w.c.)	2.60 kPa (*) (10.0" w.c.)
Gas Connection	½" BSP Male	

- CE Only:

Appliance Classification

Category: **II_{2H3P} (20, 30 / 37).**
Flue Type: **A_1.**

		Nat Gas (G20)	Propane (G31)
Heat Input (nett)	**Nominal**	18.0 kW	18.0 kW
	Reduced	6.0 kW	6.4 kW
Gas Rate (nett)	**Nominal**	1.90 m^3/hr	1.40 kg/hr
	Reduced	0.63 m^3/hr	0.50 kg/hr
Supply Pressure		20 mbar	30 / 37 mbar
Burner Operating Pressure		10 mbar (*)	26 mbar (*)
Gas Connection		½" BSP Male	

NOTE: (*)
The burner operating pressure is to be measured at the manifold test point with all burners operating at the 'High Flame' setting. The operating pressure is ex-factory set and is not to be adjusted, apart from when converting between gases, if required. Refer to the 'Gas Conversion Instruction Sheet' for this appliance for further details.

Gas Connection

Gas supply connection point is located at the rear of the appliance, approximately 215mm from the left hand side and 535mm from the floor and is entered from beneath the appliance.

Connection is ½ BSP male.

Dimensions

CB6 GAS BARBEQUE (600mm)

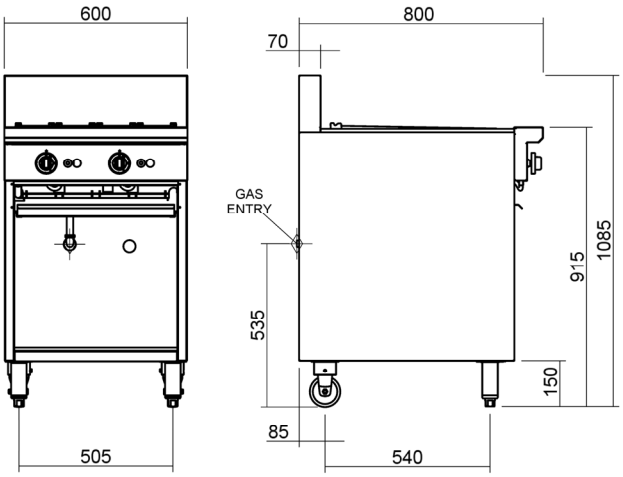

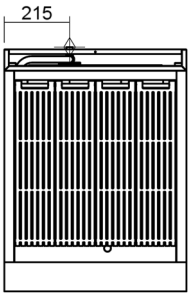

Installation Requirements

NOTE:
It is most important that this appliance is installed correctly and that operation is correct before use. Installation shall comply with local, gas, health and safety requirements.

This appliance shall be installed with sufficient ventilation to prevent the occurrence of unacceptable concentrations of health harmful substances in the room, the appliance is installed in.

Cobra Series Barbeques are designed to provide years of satisfactory service and correct installation is essential to achieve the best performance, efficiency and trouble-free operation.
This appliance must be installed in accordance with National installation codes and in addition, in accordance with relevant National / Local codes covering gas and fire safety.

Australia:
AS 5601 - Gas Installations.

New Zealand:
NZS 5261 - Gas Installation.

United Kingdom:
Gas Safety (Installation and Use) Regulations 1998.
BS6173 - Installation of catering Appliances.
BS5440 - 1 & 2 Installation Flueing & Ventilation.

Ireland:
IS 820 - Non Domestic Gas Installations.

Installations must be carried out by qualified service persons only. Failure to install equipment to the relevant codes and manufacturer's specifications shown in this section will void the warranty.

Components having adjustments protected (e.g. paint sealed) by manufacturer, are only allowed to be adjusted by an qualified service agent. They are not to be adjusted by the installation person.

Unpacking

- Remove all packaging and transit protection from the appliance including all protective plastic coating from the door outer panel and exterior stainless steel panels.
- Check equipment and parts for damage. Report any damage immediately to the carrier and distributor.
- Report any deficiencies to the distributor who supplied the appliance.
- Check that the available gas supply is correct to that shown on the rating plate attached to the inner R/H side, below the grease tray.

Location

1. Installation must allow for a sufficient flow of fresh air for the combustion air supply.
2. This appliance must be installed in a suitably ventilated room to prevent dangerous build up of combustion products.

Combustion Air Requirements

Natural Gas 18 m³/hr minimum.
LPG / Propane 18 m³/hr minimum.

3. Position the appliance in its approximate working position.
4. All air for burner combustion is supplied from underneath the appliance. The legs must always be fitted and no obstructions placed on the underside or around the base of the appliance, as obstructions will cause incorrect operation and/or failure of the appliance.
5. Components having adjustments protected (e.g. paint sealed) by manufacturer are only to be adjusted by an qualified service agent. They are not to be adjusted by the installation person.

NOTE:
Do not obstruct or block the appliances flue. Never directly connect a ventilation system to the appliance flue outlet.

Clearances

NOTE:
Only non-combustible materials can be used in close proximity to this appliance.

Any gas burning appliance requires adequate clearance and ventilation for optimum and trouble-free operation. The following minimum installation clearances are to be adhered to:

	Combustible Surface	Non Combustible Surface
LH / RH Side	200 mm	0 mm
Rear	100 mm	0 mm

Assembly

This model is delivered completely assembled. Ensure that the rear castors and front feet are securely attached.

NOTE:
This appliance is fitted with adjustable front feet to enable the appliance to be positioned securely and level. This should be carried out on completion of the gas connection. Refer to the 'Gas Connection' section.

Gas Connection

NOTE:
ALL GAS FITTING MUST ONLY BE CARRIED OUT BY A QUALIFIED SERVICE PERSON.

1. Cobra Model Barbeques do not require an electrical connection, they function totally on the gas supply only.
2. It is essential that the gas supply is correct for the appliance being installed and that adequate supply pressure and volume are available. The following checks should be made before installation is commenced:-
   a. **The Gas Type** the appliance has been supplied for is shown on coloured stickers located above the gas entry point and next to the rating plate. Check that this is correct for the gas supply the appliance is being installed for. The gas conversion procedure is detailed in the 'Gas Conversion Instruction Sheet' for this appliance.
   b. **Supply Pressure** required for this appliance is shown in the "Specifications" section of this manual. Check the gas supply to ensure that adequate supply pressure exists.
   c. **Input Rate** of this appliance is also stated on the rating plate attached to the inner R/H side, below the grease tray, and in the "Specifications" section of this manual. The input rate should be checked against the available gas supply line capacity. **Particular note should be taken if the appliance is being added to an existing installation.**

NOTE:
It is important that adequately sized piping runs directly to the connection joint on the appliance, with as few tees and elbows as possible to give maximum supply volume.

3. Fit the gas regulator supplied, into the gas supply line as close to the appliance as possible.
   The regulator connections are ½" BSP female.
   The connection is ½" BSP male.
   (Refer to the 'Specifications' section for the gas supply location dimensions).

NOTE:
The gas pressure regulator provided with this appliance is convertible between Natural Gas and LPG as per the 'Gas Conversion Section' in this manual.

Ensure the regulator is converted to the correct gas type that the appliance will operate on.
The regulator outlet pressure is fixed ex-factory for the gas type that the regulator is converted to and it is <u>NOT to be adjusted</u>.

4. A suitable joining compound which resists the breakdown action of LPG must be used on every gas line connection, unless compression fittings are used.

NOTE:
A Manual Isolation Valve must be fitted to the individual appliance supply line.

5. Correctly locate the appliance into its final operating position and using a spirit level, adjust the legs so that the unit is level and at the correct height.
6. Connect the gas supply to the appliance.
7. Verify the operating pressure is as shown in the 'Specifications Section'.
8. Check all gas connections for leakages using soapy water or other gas detecting equipment.

<u>WARNING</u>:

DO NOT USE A NAKED FLAME TO CHECK FOR GAS LEAKAGES.

NOTE:
The operating pressure to be measured at the manifold test point and with two burners operating at the 'High Flame' setting.

9. Turn 'OFF' the mains gas supply and bleed the gas out of the appliance gas lines.
10. Turn 'ON' the gas supply and the appliance.
11. Verify the operating pressure remains correct.

Commissioning

The following commissioning checks must be carried out before the barbeque is handed over for use, to ensure that the unit operates correctly and the operator(s) understand the correct operating procedure.

1. Before leaving the new installation;
   a. Check the following functions in accordance with the operating instructions specified in the "Operation" section of this manual.
      - Light the Pilot Burners.
      - Light the Main Burners.
      - Check the Low Fire Burner Operation.
      - Check the High Fire Burner Operation.

   b. Ensure that the operator has been instructed in the areas of correct lighting, operation, and shutdown procedure for the appliance.

2. This manual must be kept by the owner for future reference and a record of ***Date of Purchase***, ***Date of Installation*** and ***Serial Number of Unit*** recorded and kept with this manual. **(These details can be found on the rating plate attached to the inner R/H side, below the grease tray. (Refer to the "Gas Connection" section).**

NOTE:
If for some reason it is not possible to get the appliance to operate correctly, contact the suppler of this appliance.

Operation Guide

CAUTION:

- **This appliance is for professional use and is only to be used by qualified people.**
- **Only qualified service persons should be used to carry out installation, servicing or gas conversion operations.**
- **Components having adjustments protected (e.g. paint sealed) by the manufacturer should not be adjusted by the user/operator.**

1. The Cobra Barbeques have been designed to provide simplicity of operation and 100% safety protection.
2. Improper operation is therefore almost impossible, however bad operation practices can reduce the life of the barbeque and produce a poor quality product. To use this barbeque correctly please carefully read the following sections.

- Lighting the Pilot Burner.
- Lighting the Main Burner.

Description of Controls

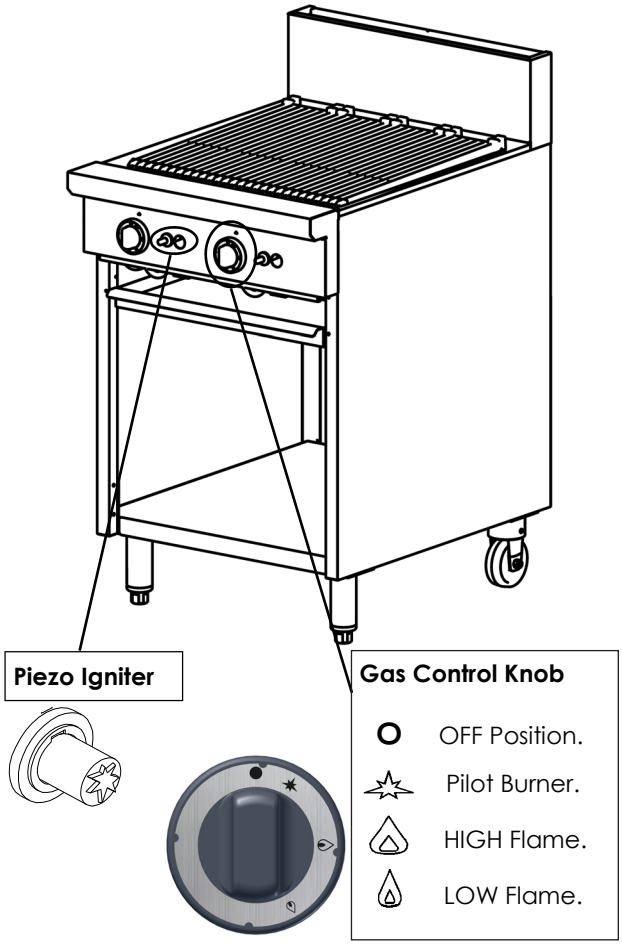

Lighting the Pilot Burner

NOTE:
All Barbeque models incorporate the push button piezo ignition system for each individual pilot burner.

1. Depress the gas control knob and rotate anti-clockwise to the 'PILOT' position.
2. With the gas control knob held in the depressed position, depress the piezo igniter button located on the front control panel to the right of the gas control knob, until the pilot burner ignites. . (Each depression operation of the piezo igniter button will generate a single spark). Pilot ignition can be viewed through openings in the plastic surround fitted to the piezo igniter button.
3. Hold in the gas control knob for approximately 10-15 seconds, then release. The pilot burner should remain alight. (If not repeat Items 2 and 3 above).

Lighting the Main Burner

1. Turn the gas controls anti-clockwise to first stop ('FULL' flame position) and allow the griddle plates to heat up to the operating temperature.
2. 'LOW' flame can be achieved by depressing the gas control knob and rotating fully anti-clockwise.
3. For intermediate heat, position the gas control knob between the 'HIGH' and 'LOW' positions to achieve the desired heat.
4. During idle periods, the main burners can be turned down to maintain an appropriate plate temperature or the gas controls can be set to the 'PILOT' position as required.

NOTE:

- **Always set the gas control knob to the 'HIGH' position when lighting the main burners.**
- **If the pilot burner goes out during normal operation, wait 5 minutes before attempting to re-light the pilot burner.**

IMPORTANT

Should any abnormal operation like;
- ignition problems,
- abnormal burner flame,
- burner control problems,
- partial or full loss of burner flame in normal operation,
be noticed, the appliance requires IMMEDIATE service by a qualified service person and shall not be used until such service is carried out.

CAUTION:

Always turn off the gas and electrical supply at the mains supply before cleaning. This appliance is not water proof.
Do not use water jet spray to clean interior or exterior of this appliance.

General

Clean the Barbeque regularly. A clean barbeque looks better, will last longer and will perform better. Carbonised grease on the surface or on the barbeque will hinder the transfer of heat from the cooking surface to the food. This will result in loss of cooking efficiency.

NOTE:

- **DO NOT use water on the Barbeque while this item is still hot as warping and cracking may occur. Allow the barbeque to cool down before cleaning.**

NOTE:

- **DO NOT use abrasive detergents, strong solvents or caustic detergents as they could corrode or damage the barbeque.**
- **In order to prevent the forming of rust on the barbeque, ensure that any detergent or cleaning material has been completely removed after each cleaning. The appliance should be switched on briefly to ensure the barbeque becomes dry. Oil or grease should be spread over the barbeque cooking surface in order to form a thin protective greasy film.**

To keep your barbeque clean and operating at peak efficiency, follow the procedures shown below:-

After Each Use

Clean the barbeque regularly to remove any food debris.

Daily Cleaning

1. The spill tray should be checked and emptied frequently to prevent overflow and spillage. Remove the spill tray while still warm so that the grease is in a liquid state. Empty any grease from the tray and wash thoroughly in the same manner as any cooking utensil.
2. Remove the grates and radiants and thoroughly clean with the splash back, interior and exterior surfaces of the barbeque with hot water, a detergent solution and a soft scrubbing brush.
3. Brush the barbeque surface with a soft bristled brush. Any carbon deposits should be removed using a scraper tool followed by wiping with a cloth to prevent accumulation of food deposits.
4. Dry the barbeque thoroughly with a dry cloth and polish with a soft dry cloth.

Weekly Cleaning

NOTE:

- **If the Barbeque usage is very high, we recommend that the weekly cleaning procedure is carried out on a more frequent basis.**
- **Ensure that protective gloves are worn during the cleaning process.**
- **DO NOT use harsh abrasive detergents, strong solvents or caustic detergents as they will damage the range and burners.**
- **DO NOT use water on the Barbeque while the grates are still hot as warping may occur. Allow these items castings to cool and remove for cleaning.**

Grates (Cast Iron)

a. Clean the grates thoroughly with a wire brush or a flexible spatula.
b. A scraper tool can be used for the removal of stubborn carbon and deposits.
c. Clean with hot water, a recommended detergent solution and a scrubbing brush. Dry all components thoroughly with a dry cloth.
d. The barbeque should be switched on briefly to ensure the grates becomes dry. A thin film of cooking oil should be spread over the grates in order to form a protective film.

Radiants (Cast Iron)

a. Clean the radiants thoroughly with a wire brush or a flexible spatula.
b. A scraper tool can be used for the removal of stubborn carbon and deposits.
c. Clean with hot water, a mild detergent solution and a scrubbing brush. Dry all radiants thoroughly with a dry cloth.

Main Burners

a. The main burners can be cleaned with hot water, a recommended detergent solution and a scrubbing brush. Ensure that any excess water is removed from inside the burners. Dry all burners thoroughly with a dry cloth.
b. Ensure that the burners are fitted correctly over the main injectors and are located properly into the recesses in the barbeque.

Stainless Steel Surfaces

a. Clean the exterior surfaces of the barbeque with hot water, a mild detergent solution and a soft scrubbing brush. Note that the gas control knobs are a push fit onto the gas control valve spindles and can be removed to allow cleaning of the front control panel.
b. Baked on deposits or discolouration may require a good quality stainless steel cleaner or stainless steel wool. Always apply cleaner when the appliance is cold and rub in the direction of the grain.

c. To remove any discolouration, use an approved stainless steel cleaner or stainless steel wool. Always rub in the direction of the grain.
d. Remove the grease tray and clean with a mild anti bacterial detergent and hot water solution using a soft bristled brush.
e. Dry the grease tray thoroughly with a dry cloth.
f. Dry all components thoroughly with a dry cloth and polish with a soft dry cloth.

Periodic Maintenance

NOTE:
All maintenance operations should only be carried out by a qualified service person.

To achieve the best results cleaning must be regular and thorough and all controls and mechanical parts should be checked and adjusted periodically by a qualified service person. If any small faults occur, have them attended to promptly. Don't wait until they cause a complete breakdown. It is recommended that the appliance is serviced every 6 months.

Gas Control Valve Re-Greasing

The gas control valve should be dismantled and greased every 6 months to ensure the correct operation of the gas control valve.

To carry out this operation;-

a. Remove the gas control knobs from the gas tap spindles by pulling the knobs away from the control panel.
b. Remove the drip tray from the appliance.
c. Remove the two screws on the underside of the control panel, securing the control panel to the hob.
d. Remove the control panel from the front of the appliance.
e. Remove the 2 screws holding shaft plate to gas control body and remove control shaft and plate. Note orientation of shaft for correct re-assembly.
f. Using needle nose pliers or similar, pull out gas control spindle, again noting its orientation.
g. Apply a suitable high temperature gas cock grease or lubricant such as ROCOL - A.S.P (Anti scuffing paste) / Dry Moly Paste to the outside of spindle.
h. Replace spindle and re-assemble the gas control in reverse order.
i. Refit the control panel to the appliance and secure with 2 screws.
j. Refit the knobs to the gas control valve spindles.

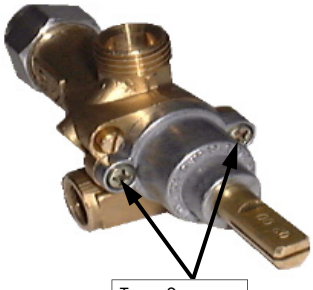

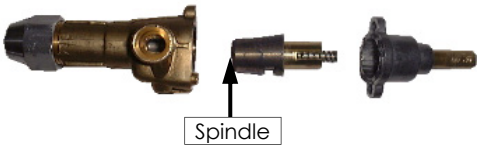

Gas Conversion Procedure

CAUTION:

Ensure that the Unit is isolated from the gas supply before commencing servicing.

NOTE:

- **These conversions should only be carried out by qualified persons. All connections must be checked for leaks before re-commissioning the appliance.**
- **Adjustment of components that have adjustments/settings sealed (e.g. paint sealed) can only be adjusted in accordance with the following instructions and shall be re-sealed before re-commissioning this appliance.**
- **For all relevant gas specifications refer to the table at the end of this section.**

Main Burners

1. Ensure that the gas supply has been turned 'Off'.
2. Remove the gas control knobs from the front control panel. The control knobs are a push fit onto the shaft of the gas control valves.
3. Remove the front control panel by slackening the 2 screws on the front lower edges of the control panel and remove the panel from the front of the barbeque.
4. Remove the barbeque castings and inner radiants to reveal the burners.
5. Carefully push the main burners forward and carefully negotiate between the shield brackets fitted over the end of the burners and remove the burners from the barbeque to reveal the main burner injectors.

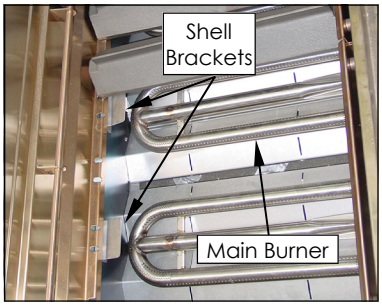

6. Unscrew the main burner injectors from the barbeque using a 13mm / $^1/_2$" A/F spanner.

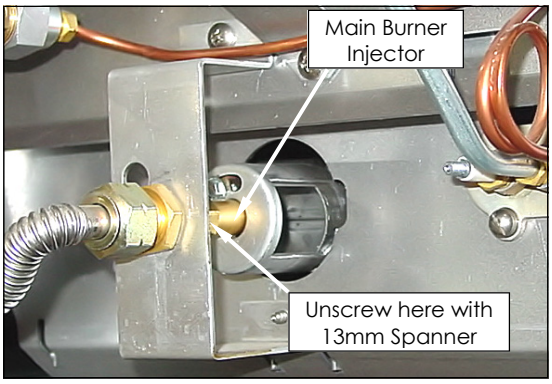

7. Determine the correct injector sizes for the corresponding gas, from the table shown in the 'Gas Specifications' section.
8. Replace with the correct size injectors.
9. Refit the main burner castings and inner radiants to the barbeque.

Pilot Burners

1. To remove the pilot burner, disconnect the gas supply tube from the base of the pilot burner.

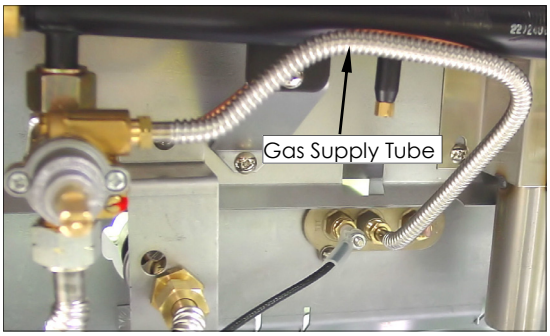

2. Using a small screwdriver,withdraw the injector from inside the pilot burner.

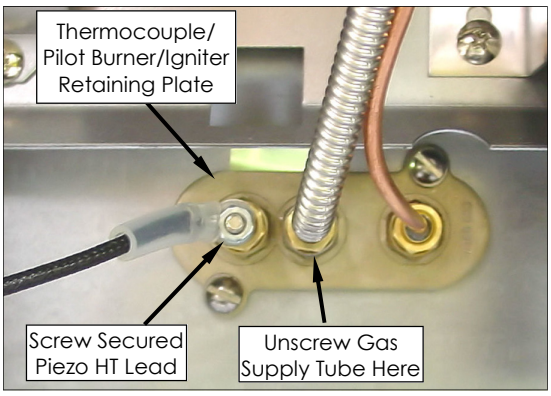

3. Determine the correct injector size for the corresponding gas from the table shown in the 'Gas Specifications' section on page 3.

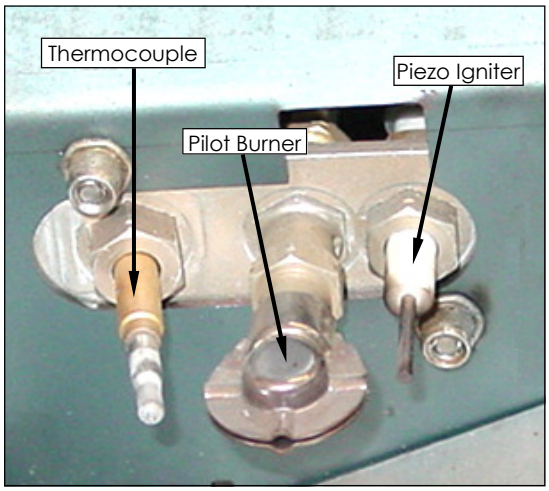

4. Fit the new pilot injector into the rear of the pilot burner and push fully home.
5. Re-connect the gas supply tube to the base of the pilot burner and tighten.

Gas Regulator

NOTE:
The regulator supplied is convertible between Natural Gas and LPG, but it's outlet pressure is fixed ex-factory and is NOT to be adjusted.

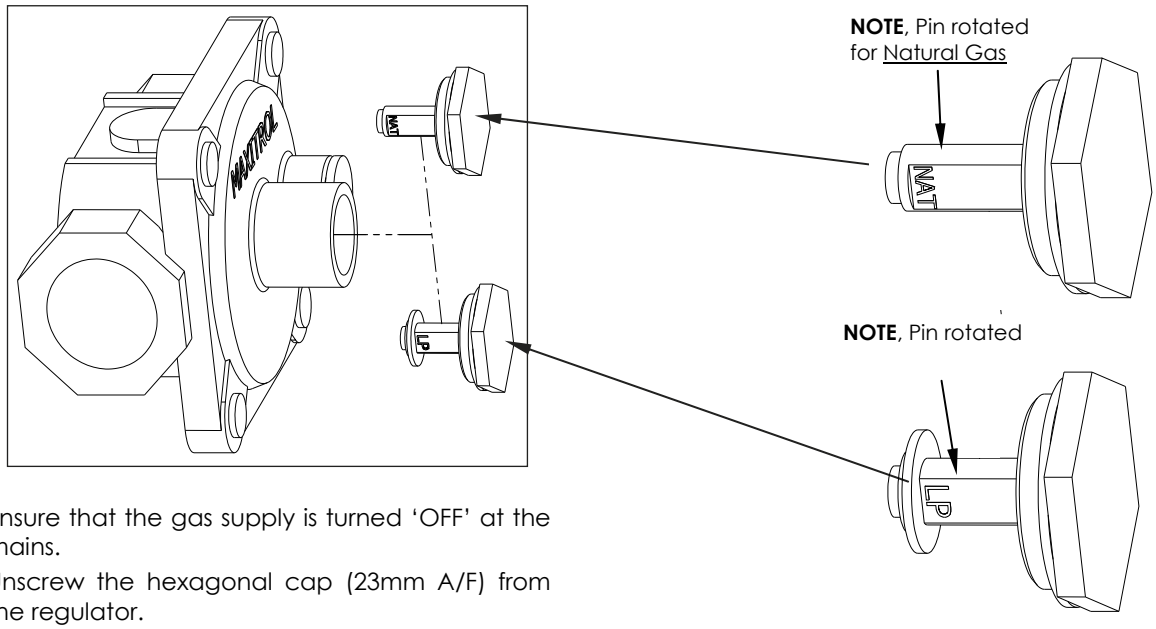

1. Ensure that the gas supply is turned 'OFF' at the mains.
2. Unscrew the hexagonal cap (23mm A/F) from the regulator.
3. Un-clip the plastic pin from the cap, rotate the pin and re-fit it back into the cap the correct way for the gas type to be used. **(Either 'LP' or 'NAT' should be visible on the flank of the pin once re-fitted to the cap)**.
4. Screw the cap back into the regulator.

Low Fire Adjustment (All Models)

1. To set the burner low fire adjustment, the low fire adjustment screw on the gas control valve should be screwed fully in, then un-screwed by the measurement shown in the 'Gas Specifications' table.

NOTE:
The "Low Fire Adjustment Screw" should be sealed with coloured paint on completion of the low fire adjustment.

2. Refit the front control panel to the barbeque and secure in position by tightening the 2 screws on the front lower edges of the control panel.
3. Refit the gas control knobs to the gas control valves. The gas control knobs are a push fit onto the shaft of the gas control valves.

Gas Type Labels

On completion of the gas conversion, replace gas type labels located at:-

- The rear of the unit, above the gas connection.
- Beside the rating plate.

Commissioning

Before leaving the converted installation;

1. Check all gas connections for leakages using

WARNING:

DO NOT USE A NAKED FLAME TO CHECK FOR GAS LEAKAGES.

soapy water or other gas detecting equipment.

2. Check the following functions in accordance with the operating instructions specified in the 'Operation' section of the Installation and Operation Manual.
   - Light the Pilot Burners.
   - Light the Main Burners.
   - Check the Low Fire burner operation.
   - Check the High Fire burner operation.
   - Ensure that all the controls operate correctly.
   - Ensure that the operating pressure remains correct.
3. Ensure any adjustments done to components that have the adjustments / settings sealed (e.g. paint sealed) are re-sealed.

NOTE:
If for some reason it is not possible to get the unit to operate correctly, shut off the gas supply and contact the supplier of this unit.

Gas Specifications

- Australia / New Zealand Only:

	Natural Gas	LP Gas (Propane)
Main Burner Injectors	2.70 mm	1.65 mm
Pilot Burner Injectors	0.45	0.30
Low Fire Adjustment	1 1/4 turns out (ccw)	½ turn out (ccw)
Supply Pressure	1.13 - 3.40 kPa	2.75 - 4.50 kPa
Operating Pressure	0.95 kPa (*)	2.6 kPa (*)
Main Burner Aeration Shutter	Fully Open	Fully Open
Gas Regulator Cap Screw		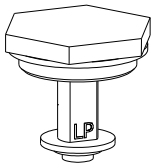

- CE Only:

Appliance Classification

Category: **II_{2H3P} (20, 30 / 37).**
Flue Type: **A_1.**

	Natural Gas (G20)	Propane (G31)
Main Burner Injectors	2.70 mm	1.65 mm
Pilot Burner Injectors	0.45	0.30
Low Fire Adjustment	1 1/4 turns out (ccw)	½ turn out (ccw)
Supply Pressure	20 mbar	30 / 37 mbar
Operating Pressure	10 mbar (*)	26 mbar (*)
Main Burner Aeration Shutter	Fully Open	Fully Open
Gas Regulator Cap Screw		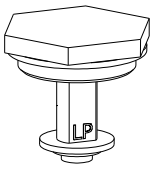

NOTE:
*** - The burner operating pressure is to be measured at the manifold test point with two burners operating at full setting. The operating pressure is ex-factory set and not to be adjusted, apart from when converting between gases, if required. (Refer to the 'Gas Conversion' section for details.**

Replacement Parts List

IMPORTANT:

Only genuine qualified replacement parts should be used for the servicing and repair of this appliance. The instructions supplied with the parts should be followed when replacing components.
For further information and servicing instructions, contact your nearest qualified service branch (contact details are as shown on the reverse of the front cover of this manual).

When ordering spare parts, please quote the part number and the description as listed below. If the part required is not listed below, request the part by description and quote model number and serial number which is shown on the rating plate.

Controls

230441	Main Burner.	
227404	Gas Control Valve.	
019218	Thermocouple	M9 x 1; 450mm.
037270	Burner Injector (Natural)	Ø 2.70mm.
037165	Burner Injector (LPG)	Ø 1.65mm.
230586	Piezo Ignitor.	
230608	Control Knob.	
019464K	Pilot Burner Kit.	
018972	Pilot Orifice (Natural)	0.45.
018971	Pilot Orifice (LPG)	0.30.
019624	Ignition HT Electrode.	
229731	Ignition HT Lead 250mm.	

Regulator

228533	Regulator (Natural Gas/LP Gas [Propane] Convertible) ½" BSP F/F.

General

229870	Burner Radiant Casting.
229869	Top Grate Casting.
230579	Collection Tray.
229951	Drip Tray.
234059	Leg.Assembly (⅝" Thread).
229674	Rear Roller Assy.

Gas Conversion Kits

Model	Gas Type to Convert to	
	LPG (Propane)	Nat. Gas
CB6	231562	231561