B+S BLACK SERIES: NC-6
Noodle Cooker

Project: _____ Item: _____

NC-6

Standard Features & Benefits:

- AISI 304 grade stainless steel
- 2mm thick AISI 316 stainless steel tank
- Multi-setting gas valve as standard for greater regulation of flame setting
- Cast iron ribbon burners
- Piezo ignition and flame failure
- Cabinet mounted stainless steel interior and exterior frame
- Swivel laundry arm easily controlled by front mounted top
- Inbuilt water impurities
- Baskets provided
- 18 month warranty

Options:

- Natural or LP Gas

Specifications:

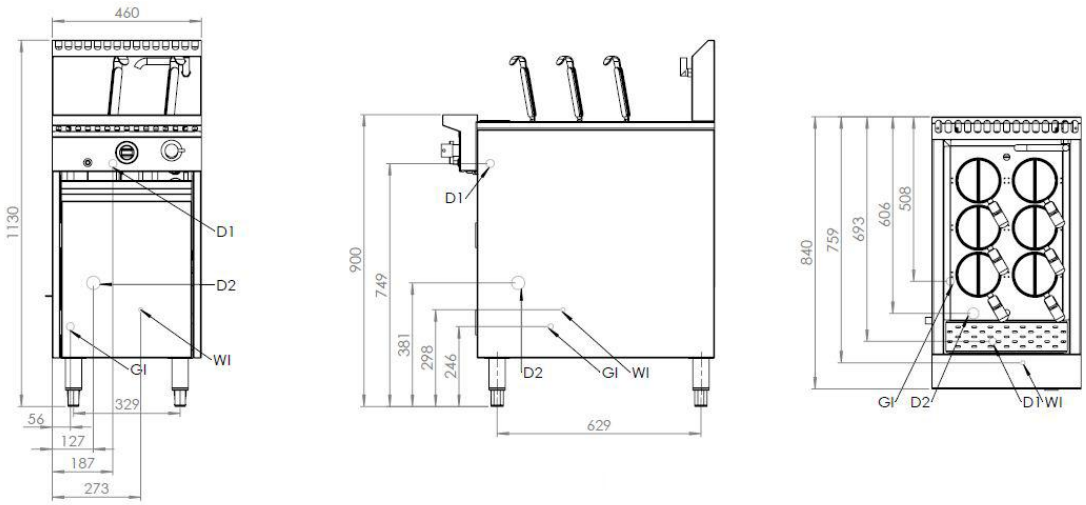

MODEL	LENGTH (mm)	DEPTH (mm)	HEIGHT (mm)	GAS CONSUMPTION (Mj/h)	
				NG	LPG
NC-6	460	840	1130	58	50

Connections:

- Gas (GI) : ¾" BSP
- Water (WI) : ½" Copper
- Waste (D1; D2) : D1 = 1" Hose; D2 = 1" Valve BSP
- Supply Pressure:
  - NG : 1.0 kPa
  - LPG : 2.6 kPa
- Regulator is included in the unit
- Must be installed by an authorised installer

B+S Commercial Kitchens
57 Plateau Road Reservoir VIC 3073 Australia | +61 3 9469 4754
info@bscommercialkitchens.com | www.bscommercialkitchens.com