INSTALLATION, OPERATING AND SERVICING INSTRUCTION MANUAL

NC Series Commercial Noodle Cooker/Steamer

Model No's.: NC – 6 – R/S – 2RP/SP – CF – YC

Approval No.; GMK10346

Manufactured By;
B&S Commercial Kitchens Pty Ltd
57 Plateau Road Reservoir VIC 3073 AUSTRALIA
Tel: +61 3 9469 4754 **Fax:** +61 3 94694504 **Web:** www.bscommercialkitchens.com

Please ensure this booklet is kept in a safe and prominent location for future reference.

The reproduction on or copying of any part of this booklet via any means is strictly forbidden unless agreed to in writing by the manufacturer.
Owing to continual product development and improvements to its products, B&S Commercial Kitchens Pty Ltd reserves the right to change the product specifications and design without prior notice.

Table of Contents

INSTALLATION, OPERATING AND SERVICING INSTRUCTION MANUAL 1

NC Series Commercial Noodle Cooker/Steamer 1

Product Specifications & Introduction 4

IMPORTANT WARNINGS 5

Table 1: Nominal Terminal Input Rates & Injector Sizes 5

Table 2: Standard Model General Information 5

Figure 1: Plumbing Connections 6

Table 3: Plumbing Connections 6

Installation Instructions 6

Regulations 6

Data Label 6

Ventilation 6

Combustible Surfaces 7

Plinth Mount Models 7

Gas Connection 7

Pressure Test Point 7

Water Connection 7

Burner Adjustment 7

Before Leaving - Commissioning 8

Operating Instructions 8

IMPORTANT WARNING! 8

IMPORTANT WARNING! 9

Lighting Instructions 9

Shutdown Procedure 9

Boil Out Procedure 9

Laundry Arm Activation 9

IMPORTANT NOTE! 9

Maintenance and Care 9

Servicing Instructions 10

Abnormal Operation 10

Panel Removing 10

Controls 11

Thermostat..... 11

Pilot Assembly 11

Piezo Assembly 11

Burners 11

Gas Valve 12

Table 4: Troubleshooting 12

Table 5: Spare Parts List 13

Warranty on B&S Commercial Cooking Appliances ..... Error! Bookmark not defined.

Product Specifications & Introduction

Appliance Name:	NC Series Noodle Cooker This appliance may be branded as B&S, Kirana and Verro
Manufactured By: **Certificate Holder:**	B&S Commercial Kitchen s Pty Ltd 57 Plateau Road Reservoir Victoria 3073 Tel; + 61 3 9469 4754 Fax: +61 3 9469 4504 E-mail: info@bscommercialkitchens.com
Model Number/s:	Supplied in various configurations. **How to read model numbers;** NC-6 – R/S – 2RP/SP – CF – YC - P ① ② ③ ④ ⑤ ⑥ ① **NC-6** **–** Noodle Cooker (All Models) ② **R/S: No of Round/Square Noodle/Pasta Baskets per Pan** **2 –** Two Round/Square Baskets **4 –** Four Round/Square Baskets **6 –** Six Round/Square Baskets ③ **RP/SP: Number of Rectangular/Square Pots per Pan** **1 –** One Rectangular Pan **2 –** Two Rectangular Pan **3 –** Three Rectangular Pan ④ **CF** **–** Cheung Fun Steaming Tray ⑤ **YC** **–** Yum Cha Steaming Tray ⑥ **P** **–** Plinth Mount **E.G.** NC4R – 1P Is noodle cooker with tank provisions for four round baskets and one rectangular pot.
Approval Number:	GMK10344
Gas Type/s:	Natural Gas & Propane Gas

We are confident that you will be delighted with your B&S wok table, and that it will become the backbone of your kitchen. To ensure you receive the utmost benefit from your new B&S appliance, there are two important things you can do.

1. Ensure you read this booklet carefully and carefully follow the instruction given. Ensure that this booklet is kept in a safe and prominent location for future reference.

2. Should you be ensure of any aspect of the operation/performance, servicing and installation of the appliance, please contact your B&S dealer immediately. In most instances a phone call could answer your question.

IMPORTANT WARNINGS

THIS APPLIANCE SHALL ONLY BE INSTALLED/SERVICED BY AN AUTHORISED INSTALLER.
THIS APPLIANCE MUST BE INSTALLED IN ACCORDANCE WITH THE SPECIFIED INSTRUCTIONS AND SPECIFICATIONS.
IMPROPER INSTALLATION OR OPERATION OF THIS APPLIANCE MAY RESULT IN PRODUCT FAILURE WHICH MAY LEAD TO PROPERTY DAMAGE, PERSONAL INJURY OR DEATH.
CAUTION MUST BE TAKEN WHEN OPERATING THIS APPLIANCE TO MINIMISE RISK OF FIRE. THE APPLIANCE MUST NOT BE LEFTON UNATTENDED.
REGULAR INSPECTIONS BY AN AUTHORISED SERVICE PERSON ARE STRONGLY RECOMMENDED TO ENSURE PROPER AND SAFE FUNCTIONING OF THIS APPLIANCE.
AFTER ANY SERVICING OR ADJUSTING OF GAS CONNECTED COMPONENTRY, GAS LEAK TEST MUST BE CARRIED OUT TO ENSURE THERE ARE NO GAS LEAKING HAZARDS.
NEVER STORE ANY FLAMEABLE LIQUIDS/VAPOURS IN VACINITY OF THIS APPLIANCE. NEVER SPRAY AEROSOLS IN THE VICINITY OF THIS APPLIANCE WHILE IT IS IN OPERATION.
ENSURE ANY TRANSIENT PROTECTION IS REMOVED BEFORE INSTALLING THE APPLIANCE ENSURING ANY POSSIBLE DAMAGE TO THE APPLIANCE OR COMPONENTS/ PARTS THAT MAY HAVE BEEN SUSTAINED DURING TRANSPORTATION IS REPORTED TO THE MANUFACTURER.
THIS APPLIANCE IS NOT INTENDED TO BE USED IN A MARINE ENVIRONMENT. ENSURE APPLIANCE IS INSTALLED IN A STABLE POSITION.
FAILURE TO FOLLOW THE INFORMATION PROVIDED IN THIS BOOKLET WILL VOID THE B&S WARRANTY AND MAY RESULT IN DAMAGE TO EQUIPMENT OR INJURY TO PERSONNEL.

Table 1: Nominal Terminal Input Rates & Injector Sizes

Gas Type	Injector Size (mm)	MJ/h per pan	Test Point Pressure
Natural Gas	1.85 mm	58	1.00 kPa
Propane Gas	1.10 mm	50	2.60 kPa

Table 2: Standard Model General Information

	Weight (kg)	Overall Height (mm)	Overall Depth* (mm)	Overall Width* (mm)
NC-6	100	1,150	840	460

*Denotes Minimum

Overall Dimensions – Custom made appliances

Height overall splashback	: 1750mm - 1,300mm + adjustable legs.
Height Plinth Mount	: 980mm.
Width	: 1,680mm minimum with 4 pans.
Depth	: 840mm minimum.

Figure 1: Plumbing Connections

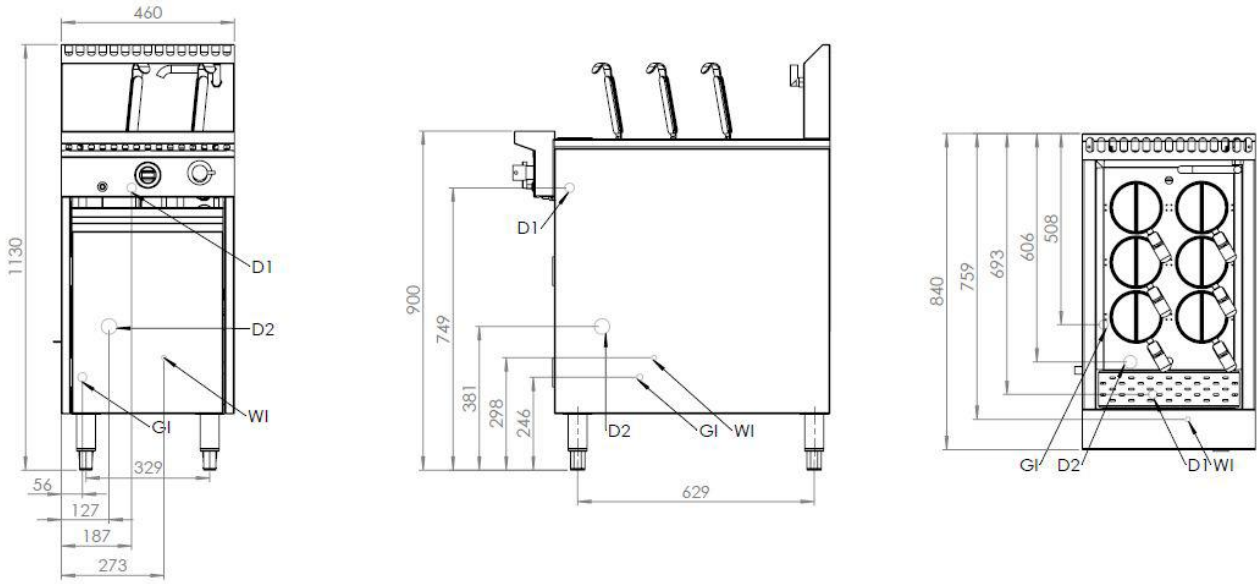

Table 3: Plumbing Connections

	Connection	Position from Floor (mm)	Position from Rear of Appliance (mm)	Position from LHS/RHS edge of Appliance (mm)
Water Inlet (WI)	½″ Copper	298 (+/-5)	759 (+/-5)	273 (+/-5) LHS
Gas Inlet (GI)	¾″ male BSP	246 (+/-5)	508 (+/-5)	56 (+/-5) LHS
Over Flow (D1)	1″ Hose	749 (+/-5)	693 (+/-5)	187 (+/-5) LHS
Waste (D2)	1″ BSP	381 (+/-5)	606 (+/-5)	127 (+/-5) LHS

Plinth mount models have connections 170 mm lower.

Installation Instructions

Regulations

The appliance **must** be installed only by authorised persons and in accordance with the manufacturer's installation instructions, local gas fitting regulations, municipal building codes, AS 5601 – Gas Installations and any other health and safety regulations, local authority, gas, electrical any other statutory regulations.

Data Label

The data label is located on the front of the appliance. This appliance is suitable for Natural Gas and LPG. Please ensure that the gas supply matches the Data Label ensuring that the gas supply is correct for the appliance being installed and that adequate supply pressure and volume is available – refer to appliance data plate for Mj/hr consumption, injector sizes of main burners/pilots, etc.

Ventilation

It is strongly recommended that the appliance is installed under an extraction hood (with a clearance of 1200mm to the grease filter). Ventilation must be in accordance with AS5601 - *Gas* Installations. In general, the appliance should have adequate ventilation for complete combustion of gas, proper flueing and to maintain temperature of immediate surroundings within safe limits.

Combustible Surfaces

Clearances to combustible surfaces must be in accordance with AS/NZ 5601- *Gas Installations*, *clause 5.12.4.5.* Install on a flat/level, solid, fire resistance floor. Where the floor is not fire resistant, a fire resistant material shall be put under the appliance which shall have a fire resistance rating at least equal to that of 10mm millboard. The material shall extend at least 50mm beyond the edge of the appliance.

Leave a clearance of at least 200mm between the appliance and any combustible surface.

Leave clearance of at least 500mm from the front of the noodle cooker for services.

Plinth Mount Models

To plinth mount remove the legs and sit the unit on a concrete slab which should be the width of the appliance and 700mm deep. The height of the slab is determined by the installer.

Gas Connection

The gas connection is male ¾" BSP and is situated at the rear of the appliance below the main body frame. The inlet is to the ¾" pipe inlet located at the rear of the appliance.

This appliance is available in models for fixed installation.

The appliance can be connected with rigid pipe as specified in AS/NZ 5601. For fixed installation models we recommend connection with 20mm copper tube and a certified isolating ball valve.

BEFORE CONNECTING NEW PIPE TO THIS APPLIANCE, THE PIPE MUST BE BLOWN OUT THOROUGHLY TO REMOVE ALL FOREIGN MATERIAL. FOREIGN MATERIAL IN THE BURNER AND GAS CONTROLS WILL CAUSE IMPROPER AND DANGEROUS OPERATION.

Connect to gas.

Pressure Test Point

All appliances that are dispatched from our factory are tested and adjusted according to the specifications for the required gas type. The regulator may require adjustment to achieve required gas pressure.

Check the burner pressure at the test point on the regulator. The test point pressure should be adjusted to 1.00 kPa – Natural gas or 2.60 kPa – LPG with the burners operating at maximum.

Water Connection

The water connection is 15mm copper and is situated at the rear of the appliance below the main body frame. The number of water inlets varies to client's particular needs. Water isolation valves are fitted to all water inlets. Ensure water is flushed through before final connection.

Water waste outlet is located on the left hand side of the waste gutter of the appliance (50mm connection). The water inlets and water drains should be connected with rigid copper pipes. We do not recommend the usage of plastic/PVC piping for connection of waste outlet.

Burner Adjustment

The burners do not require any adjustments.

Note: If any problems are experienced in maintaining the burners, your local service agent should be connected.

Before Leaving - Commissioning

Check **all** connections for gas leaks with soap and water. **Do not** use a naked flame for detecting leaks.

Ignite the pilot and main burners as prescribed below to ensure correct operation of gas valves, burners and ignition. When satisfied with the operation of the appliance, please instruct the user on the correct method of operation. Ensure that this instruction manual is left with owner of the appliance.

- **A.** Set thermostat to lowest setting. Model with Alpha Brass valve do not have a thermostat.
- **B.** Turn gas cock knob such that indicator knob points to 'OFF' (solid circle) position and allow 5 minutes for any gas in combustion chamber to escape (propane gas being heavier than air, may require forced ventilation). **Note:** If knob is 'ON' (flame) position, turn anti-clockwise to 'PILOT' (spark) position. Then depress knob and turn to 'OFF' position.
- **C.** Turn gas cock knob clockwise so indicator points to 'PILOT' position.
- **D.** Then light the pilot manually while depressing the gas cock knob.
- **E.** Keep knob fully depressed for thirty seconds.
- **F.** Release gas cock knob. Pilot flame should continue to burn. Observe pilot is established. If pilot goes out when knob is released, repeat steps **A** to **F** allowing more time for thermocouple or pilot generator to heat up.
- **G.** When pilot stays alight, operation of gas valve may be given over to thermostat by turning gas cock counter clockwise so indicator points to 'ON' position (flame).
- **H.** Set thermostat (if fitted) to desired temperature.

In the event the appliance fails to operate correctly, check the following;

1. Data plate to ensure correct gas type and pressure (adjust if necessary).
2. Injector sizes – check against data plate and installation manual.
3. View pilot size and adjust if required.

In case appliance fails to operate correctly after all checks have been carried out, pleased contact;

B&S Commercial Kitchens Pty Ltd
57 Plateau Road
Reservoir VIC 3073
Tel.: + 61 3 9469 4754 Fax.: + 61 3 9469 4504 E-mail: info@bscommercialkitchens.com

Operating Instructions

WARNING!

- **DO NOT** spray aerosols in the vicinity of this appliance while it is in operation.
- **DO NOT** store or use flammable liquids or items in the vicinity of this appliance.
- Prior to lighting, smell area surrounding the appliance for gas (please note that as some gas types are heavier than air, we recommended the operator to also smell the floor around the appliance).
- In the event you smell gas: **DO NOT** light any appliance. **DO NOT** touch/ operate any electrical switch or phone in your building. Call local gas supplier **immediately** and follow their instructions.

IMPORTANT WARNING!

ALWAYS ENSURE NOODLE COOKER PAN HAS WATER IN IT WHEN MAIN BURNERS AND PILOT LIGHT ARE ALIGHT.

To ensure noodle cooker pan is clean from any contamination resulting from the appliances manufacture, shipping and installation, the noodle cooker pan must be boiled out before first use.

NEVER LEAVE THE APPLIANCE UNATTENDED DURING THE BOIL-OUT PROCESS. IF THE BOIL-OUT SOLUTION OVER BOILS, IMMEDIATELY TURN THE NOODLE COOKER OFF AND LET THE SOLUTION COOL FOR A FEW MINUTES BEFORE RESUMING THE PROCESS.

BEFORE LIGHTING THE NOODLE COOKER, MAKE SURE THE NOODLE COOKER IS 'OFF' AND THE NOODLE COOKER PAN DRAIN VALVE(S) IS/ARE CLOSED. NEVER ALLOW BURNER TO OPERATE WITH TANK EMPTY. LIGHT ONLY WHEN THE WATER IS AT THE MINIMUM OPERATING WATER MARK LOCATED ON REAR PANEL OF PAN (WHEN LOOKING INTO PAN STANDING IN FRONT OF THE APPLIANCE).

IMPORTANT WARNING!

ENSURE NO OR MINIMAL AMOUNTS OF OIL AND FOODSTUFFS FALL INTO THE BURNER AREA WHILST COOKING. FAILURE TO DO SO MAY AFFECT THE EFFICIENT AND SAFE OPERATION ON THE APPLIANCE AND **MAY VOID WARRANTY**

Lighting Instructions

A. Set thermostat to lowest setting. Models fitted with PEL valve do not have a thermostat.
B. Turn gas cock knob such that indicator knob points to 'OFF' (solid circle) position and allow 5 minutes for any gas is combustion chamber to escape (propane gas being heavier than air, may require forced ventilation). **Note:** If knob is in 'ON' (flame) position, turn anti-clockwise to 'PILOT' (spark) position. Then depress knob and turn to 'PILOT' position.
C. Turn gas cock knob clockwise so indicator points to 'PILOT' position.
D. Then light the pilot using piezo ignitor (or manually) while depressing the gas cock knob.
E. Keep knob fully depressed for thirty seconds.
F. Release gas cock knob. Pilot flame should continue to burn. Observe pilot is established. If pilot goes out when knob is released, repeat steps **A** to **F** allowing more time for thermocouple or pilot generator to heat up.
G. When pilot stays alight, operation of gas valve may be given over to thermostat by turning gas cock counter clockwise so indicator points to 'ON' position (flame).
H. Set thermostat (if fitted) to desired temperature.

Shutdown Procedure

A. Set thermostat to lowest setting. Models fitted with PEL valve do not have a thermostat.
B. Turn gas cock knob such that indicator knob points to 'OFF' (solid circle) position and allow 5 minutes for any gas in combustion chamber to escape (propane gas being heavier than air, may require forced ventilation).
C. Observe pilot frame is extinguished.

Boil Out Procedure

1. Prior to lighting burner, ensure noodle cooker drain valve is closed.
2. Fill noodle cooker pan with a mixture of cold water and dishwashing detergent up to the bottom of the water level line in the pan.
3. Operate the appliance as described in LIGHTING PROCEDURE above.
4. Simmer the solution for approximately one hour and turn off main burner and allow solution to cool.
5. Add approximately 5 litres of cold water into the pan and stir.
6. Open drain valve and drain the solution into a suitable container and then clean the pot thoroughly.
7. Close drain valve and rinse the fryer pan a couple of times by filling the pan with clean water and draining.
8. Dry the pan thoroughly with a clean/dry towel.

Laundry Arm Activation

The water tank must be filled with water whenever the burners are in use to prevent the base of the pan from buckling and distorting. To activate;

1. Locate spindle on front panel.
2. Turn spindle anti-clockwise to activate water.
3. Adjust as necessary.
4. Turn spindle clockwise to de-activate water.

IMPORTANT NOTE!

A SMALL AMOUNT OF TRICKLING WATER MAY BE REQUIRED TO RUN INTO THE PAN WHILST IN OPERATIONS TO ENSURE ADEQUATE WATER SUPPLY TO THE TANK, ENSURE EXCESS STARCH CREATED DURING COOKING PROCESS EXITS VIA THE OVERFLOW PIPE AND ENSURE WATER PURITY.

Maintenance and Care

To ensure longevity and continued performance efficiency of you appliance, a good cleaning and maintenance program is paramount. In general the use of steel wool abrasive cloths/cleaners/powders **should not** be used to clean this appliance.

Daily Checks & Service

- Look for any foreign materials in burner area, leaks, damaged knobs and any other signs that the stock pot table is not ready and safe for operation. Inspect burner area and ensure pilots are in position near the burner, and that the pilot flame when ignited is blue in color and approximately 20-40mm in length. If fitted with thermocouple ensure pilot flame is in contact with it. Call the manufacturer if you see any problems. Always ensure that area surrounding pilot and thermocouple is clear of any fats, oils or foodstuffs.
- Clean the exterior surfaces of the stock pot with a clean, damp cloth soaked with mild detergent to remove any food stuffs, oils, dust and any other materials.
- Ensure the primary water drain (located in gutter) is cleared of any food stuffs during operation of the appliance and on completion of use of the appliance.
- The spillage trays located under the main body of the appliance should be removed (by pulling out) and any carbonised foodstuffs and oils should be removed using a clean, damp cloth soaked in a mild detergent.

Yearly Checks & Service

- **The appliance should be inspected and adjusted periodically by a qualified service person as part of any kitchen maintenance program.**
- **B&S recommends that this appliance is inspected at least annually by a authorised service technician as follows:**
    - Inspect the table inside-out for excessive build-up of any fats, oils and foodstuffs.
    - Inspect that the burners and other components (i.e. pilots, thermocouples, etc.) are in good condition and functioning properly.
    - Inspect all gas connections for leaks and ensure all connections are tightened properly.
    - Ensure burner manifold pressure is in accordance with that specified on the data plate of the appliance.
    - Inspect all gas connections for leaks and ensure all connections are tightened properly.

In case of difficulties, contact B&S Commecial Kitchens Pty Ltd or their authorised service agent.

Servicing Instructions

WARNING!

- Servicing shall be carried out by autorised personnel **only**. Failure to do so will void the B&S warranty and may result in damage to equipment or injury to personnel.
- Before commencing any disassembly/ assembly of gas controls, please ensure the gas supply is turned off (isolated).

FAILURE TO DO SO WILL VOID B&S WARRANTY AND MAY RESULT IN DAMAGE TO EQUIPMENT OR INJURY TO PERSONNEL.

Abnormal Operation

Any of the following are considered to be abnormal operation and may require servicing;

- Incomplete ignition of burner/burner failing to keep alight.
    - Check burner is not blocked.
- Yellow tipping of the burner flame.
    - Check aeration of burner.
- Gas valves which are difficult to turn.
- Burner failing to keep alight.

Panel Removing

1. It is not necessary to remove any side or back panels for servicing the unit.
2. To remove the front panel, it will be necessary to pull off the thermostat control knob then undo the two screws holding the panel to the front hob section.

Controls

If gas control fails to operate, check the following;

1. The thermocouple is in the pilot flame. The thermocouple must be hot in order to generate energy to operate an electromagnetic system to lift and maintain open the control valve.
2. To do so, it is necessary to generate approximately 650 milli-volts. If not functioning correctly, the thermocouple should be replaced.
3. Check both main and safety thermostats switching systems. If thermostat is malfunctioning, it should be replaced.

Thermostat

1. Pull thermostat knob off and unscrew thermostat from control panel.
2. Remove control panel.
3. Remove both terminals from the thermostat.
4. Remove thermostat capillary gland and remove thermostat bulb.
5. To fit new thermostat, reverse the above procedures

Pilot Assembly

1. Undo the two screws holding the pilot bracket assembly located on the front shield behind the gas valve.
2. Gently pull the pilot assembly bracket down and outwards.
3. To change thermopile
    a. Undo locking screw holding thermopile to pilot assembly bracket and gently pull the thermopile down.
    b. Undo terminal screws on located on ‘TH TP’ and ‘TP’ on main gas valve.
    c. Replace with new thermopile and assemble in reverse order.
4. To change thermocouple
    a. Undo locking screw holding thermocouple to pilot assembly bracket and gently pull the thermocouple down.
    b. Undo thermocouple screw located in the main gas valve.
    c. Replace with new thermocouple and assemble in reverse order.
5. To change new pilot assembly
    a. Follow steps 1 and 2.
    b. Undo the two screws on the pilot mounting bracket and pilot bracket.
    c. Follow procedures 3. A. and 4. A. listed above.
    d. Remove piezo lead from piezo.
    e. Undo pilot gas flexible tube.
    f. Change pilot assembly over and reassemble in reverse order.

Piezo Assembly

1. To change piezo ignitor
    a. Undo the piezo screw located on the back of the piezo ignitor located on the bottom right hand side of the main gas control
    b. Gently remove piezo lead from rear of piezo ignitor
    c. Replace piezo ignitor and replace in reverse order
2. To change piezo lead
    a. Gently remove piezo lead from rear of piezo igitor
    b. Gently remove piezo ignitor lead from pilot assembly
    c. Replace with new lead and assemble in reverse order.

Burners

1. To change/service burner (ensure burner is cool to prevent injury to service person)
    a. Undo the wing nut(s) located on the front burner support channel.
    b. Gently lift the front section on an angle and pull forwards so that the rear of the burner is removed off the burner injector.
    c. Allow the rear section of the burner to fall outside the combustion chamber and move

backwards so that burner is clear of the combustion area.

d. Reassemble in reverse order.

Gas Valve

1. To remove/change/service main gas valve.

a. Undo barrel union on right hand side of gas valve
b. Undo flexible tube to main gas valve from burner manifold.
c. Undo flexible tube from pilot assembly to main gas valve.
d. Undo terminals from thermostat (if fitted) on the main gas valve.
e. Undo thermocouple leading into main gas valve
f. Remove piezo igniter as described under PIEZO ASSEMBLY 1. a. above
g. Undo mounting screws on the gas valve support bracket.
h. Gently remove main gas valve
i. Reassemble in reverse order

Table 4: Troubleshooting

FAULT	POSSIBLE CAUSE	CHECKS
Pilot light not igniting	Blockage of pilot	Check pilot injector is not blocked as described in servicing instructions – pilot and flame safeguard
	Adjustment of pressure from flame failure control	Check gas pressure to pilot as described under servicing instructions – adjustments
Pilot light not establishing	Positioning of thermocouple	Check connection of the thermocouple to the control is not loose. Adjust positioning of thermocouple to ensure pilot flame is hitting thermocouple
	Faulty thermocouple	Contact manufacturer or authorised service agent
	Faulty flame failure control valve	Contact manufacturer or authorised service agent
Pilot established, main burner not lighting	Faulty thermocouple	Contact manufacturer
	Faulty Thermopile	Contact manufacturer
	Faulty flame failure control valve	Contact manufacturer
Telescopic laundry arm constantly running (on water/deck cooled wok tables)	Worn tap washer	Change washers in tap assembly. Contact manufacturer or authorised service agent

Table 5: Spare Parts List

Part Number	Description
0569	Thermopile Generator
0590	Pilot for Millivolt Control
0580 or 0580A	SIT 820 Nova Gas Valve
	Alpha Brass A 62 Gas Valve
033	Laundry Arm
010	Front Stop tap
0581	Thermostat Switch
212	¾" M/F Ball Valve
602	Flexitube from Gas valve to pilot
602A	Flexitube from Gas Vale to Manifold
036A	Piezo Lead
036	Piezo
325	Noodle Basket

To obtain further service information concerning this appliance, pleased contact;

B&S Commercial Kitchens Pty Ltd
57 Plateau Road
Reservoir VIC 3073
Tel.: + 61 3 9469 4754 Fax.: + 61 3 9469 4504 E-mail: info@bscommercialkitchens.com