PSERIES

turbofan®

P8M / P12M Series

Proofer/Holding Cabinets
(Manual Operation)

Installation and Operation Manual

turbofan
CONVECTION OVEN SYSTEMS

MOFFAT®

BLUE SEAL®

234277-9

MANUFACTURED BY

Moffat Limited
Christchurch
New Zealand

INTERNATIONAL CONTACTS

AUSTRALIA

Moffat Pty Limited

Web:	www.moffat.com.au
E.Mail:	vsales@moffat.com.au
Main Office:	(tel) +61 (03) 9518 3888
	(fax) +61 (03) 9518 3833
Service:	(tel): 1800 622 216
Spares:	(tel): 1800 337 963
Customer Service:	(tel): 1800 335 315
	(fax): 1800 350 281

CANADA

Serve Canada

Web:	www.servecanada.com
E.Mail:	info@servecanada.com
Sales:	(tel): 800 551 8795 (Toll Free)
Service:	(tel): 800 263 1455 (Toll Free)

NEW ZEALAND

Moffat Limited

Web:	www.moffat.co.nz
E.Mail:	sales@moffat.co.nz
Main Office:	(tel): 0800 663328

UNITED KINGDOM

Blue Seal

Web:	www.blue-seal.co.uk
E.Mail:	sales@blue-seal.co.uk
Sales:	(tel): +44 121 327 5575
	(fax): +44 121 327 9711
Spares:	(tel): +44 121 322 6640
	(fax): +44 121 327 9201
Service:	(tel): +44 121 322 6644
	(fax): +44 121 327 6257

UNITED STATES

Moffat

Web:	www.moffat.com
Sales:	(tel): 800 551 8795 (Toll Free)
	(tel): +1 336 661 1556
	(fax): +1 336 661 9546
Service:	(tel): 800 858 4477 (Toll Free)
	(tel): +1 336 661 1556
	(fax): +1 336 661 1660

REST OF WORLD

Moffat Limited

Web:	www.moffat.co.nz
E.Mail:	export@moffat.co.nz

The reproduction or copying of any part of this manual by any means whatsoever is strictly forbidden unless authorized previously in writing by the manufacturer.

In line with policy to continually develop and improve its products, Moffat Ltd. reserves the right to change the specifications and design without prior notice.

© Copyright Moffat Ltd. June 2012.

Contents List

P8M / P12M Turbofan Proofer / Holding Cabinets.

Model Numbers Covered in this Manual

P8M - Turbofan Proofer / Holding Cabinet - 8 Tray.
P12M - Turbofan Proofer / Holding Cabinet - 12 Tray.

Introduction 2
Safety Information

Specifications 3

Installation 4
Installation Requirements
Unpacking
Location
Clearances
Electrical Connection
Water Connection
Positioning of Proofer / Holding Cabinet
Reversing the Proofer Door

Operation 6
Operation Guide
Proofer / Holding Cabinet Control Panel
Description of Controls
Operating in 'Proof' Mode
Operating in 'Hold' Mode

Cleaning and Maintenance 8
Cleaning Guidelines
Proofer / Holding Cabinet Cleaning
Periodic Maintenance

Fault Finding 11

Electrical Schematic 12

Replacement Parts List 13

Appendix 1 - Proofer Door Reversal 14

Introduction

Before using your new Proofer / Holding Cabinet, please read this instruction manual carefully, pay particular attention to any information labelled **'WARNING'**, **'CAUTION'**, **'IMPORTANT'** or **'NOTE'** in this manual.

Warning	**Indicates a hazardous situation which, if not avoided, will result in death or serious injury.**
Caution	**Indicates a hazardous situation which, if not avoided, will result in minor or moderate injury.**

If you are unsure of any aspect of the installation, instructions or performance of your Proofer / Holding Cabinet, contact your TURBOFAN dealer promptly. In many cases a phone call could answer your question.

Should you contact your TURBOFAN dealer on any matter concerning this proofer / holding cabinet, please have the information provided opposite, readily available.

This manual must be kept by the owner for future reference.

A record of the ***Date of Purchase, Date of Installation*** and ***Serial Number of the Proofer / Holding Cabinet*** should be recorded in the area provided below.

The serial number of this Proofer / Holding Cabinet can be found on the Technical Data Plate located on the front right hand side panel, see diagram in 'Installation Section'.

Model Number:

Serial Number:

Dealer:

Service Provider:

Date Purchased:

Date Installed:

Safety Information

For your safety, please pay attention to the following symbols marked on the appliance.

- Risk of electric shock.

No user serviceable parts inside.

Qualified service person access only.

Disconnect from power before servicing.

Specifications

P8M Proofer / Holding Cabinet

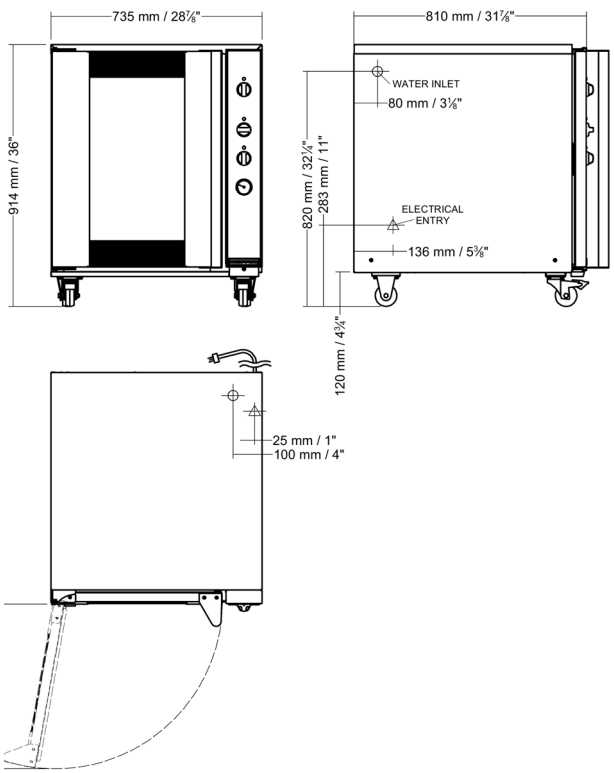

P12M Proofer / Holding Cabinet

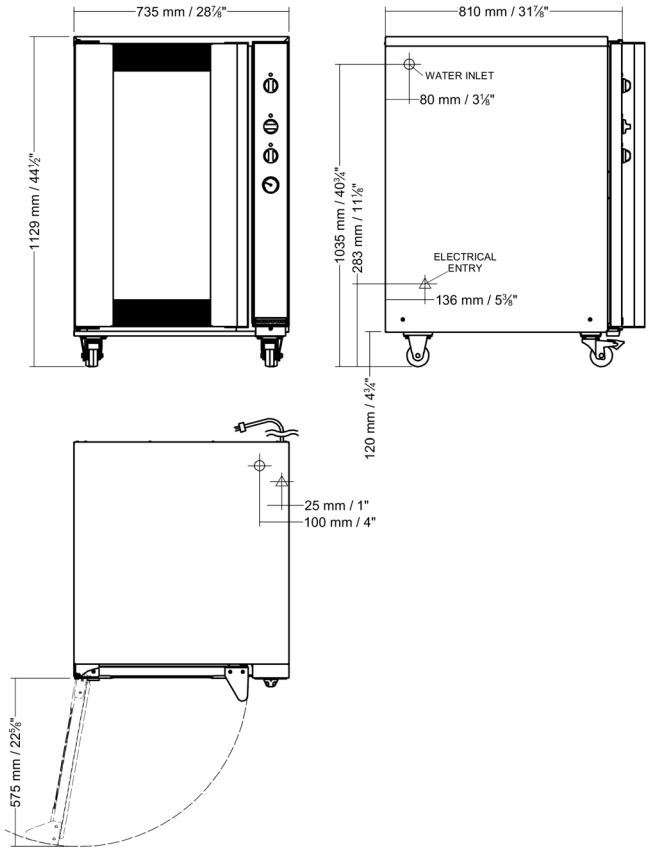

P8M / P12M Specifications Tables:-

Power Ratings			
P8M	110-120V,	1P+N+E,	60HZ, 1.45 kW
	220-240V,	1P+N+E,	50/60HZ, 1.50 kW
P12M	110-120V,	1P+N+E,	60HZ, 1.95 kW
	220-240V,	1P+N+E,	50/60HZ, 1.90 kW

Tray Details	
Tray Capacity	**Tray Spacing**
8, 18" x 26" / 460 x 660, Full Size Sheet Pan Capacity. 16, 18" x 13" / 460 x 330, Half Size Sheet Pan Capacity. 8, 600 x 400mm Tray Capacity (Optional Kit).	76mm / 3"
12, 18" x 26" / 460 x 660, Full Size Sheet Pan Capacity. 24, 18" x 13" / 460 x 330, Half Size Sheet Pan Capacity. 12, 600 x 400mm Tray Capacity (Optional Kit).	76mm / 3"

Installation Requirements

Important:

- **Installation shall comply with local electrical, health and safety requirements.**
- **It is most important that this proofer / holding cabinet is installed correctly and that the operation is correct before use.**
- **If you have any questions regarding the proper installation and / or operation of this proofer / holding cabinet , please contact your local Turbofan distributor.**

Unpacking

1. Remove all packaging and transit protection including all protective plastic coating from the exterior stainless steel panels.
2. Check the proofer / holding cabinet and supplied parts for damage. Report any damage immediately to the carrier and distributor.
3. Check that the following parts have been supplied with your proofer / holding cabinet:-

   Adaptor Brass.
   Washer Rubber. } USA / Canada only.

4. Report any deficiencies to the distributor who supplied the appliance.
5. Ensure that all the castors are fitted securely.
6. Check that the available electrical supply is correct to as shown on the Technical Data Plate located on the front right hand side panel.

   - Refer to 'Specifications' section, 'P8M / P12M Specifications Tables'.

Location

1. Position the proofer / holding cabinet in its working position.
2. The proofer / holding cabinet should be positioned so that the control panel and shelves are easily reachable for loading and unloading.

Clearances

To ensure correct ventilation for the motor and controls, the following minimum installation clearances are to be adhered to:-

Top	0 mm / 0".
Rear	0 mm / 0".
Left-hand side	0 mm / 0".
Right-hand side	25 mm / 1".

Electrical Connection

Warning

This proofer / holding cabinet must be earthed/grounded.
If the supply cord is damaged, it must be replaced by a suitably qualified person in order to avoid a hazard.

Each proofer / holding cabinet should be connected to an adequately protected power supply and an isolation switch mounted adjacent to, but not behind the proofer / holding cabinet and must be readily accessible to the operator. This switch must be clearly marked and readily accessible in case of fire.

Check that the electricity supply is correct to as shown on the Technical Data Plate on the front right hand corner of the proofer / holding cabinet side panel.

The P8 / P12 Proofer / Holding Cabinets are supplied with electrical cords fitted . Ensure that the appliance is fitted with the appropriate power cord and plug.

Technical Data Plate - Location

Water Connection

1. A cold water supply should be connected to the water inlet located on the rear right hand side of the unit.
2. Connect to the water supply.

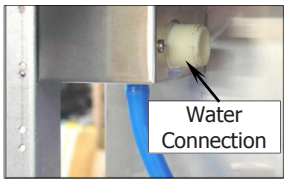

- Max Inlet Pressure 80psi / 550kPa.

3. Turn 'On' the water supply to check for water leaks.

NOTE: The Prover / Holding Cabinet can be fitted with an optional Water Filter Kit (Part No. 234347). For fitting instructions refer to the Instruction Sheet supplied with the Water Filter Kit.

Positioning of Proofer / Holding Cabinet

Correctly locate the proofer / holding cabinet into its final operating position and lock the front castors to retain the proofer / holding cabinet in it's location.

Operation Guide

- Turbofan Proofer / Holding Cabinets have been designed to provide simple operation.
- This Proofer / Holding Cabinet is intended for use in a commercial kitchen and must only be put to the use for which it was intended, i.e. proofing and holding of food products. To use this Proofer / Holding Cabinet correctly, please read the following sections carefully:-

Proofer / Holding Cabinet Control Panel

Control Panel (˚F) **Control Panel (˚C)**

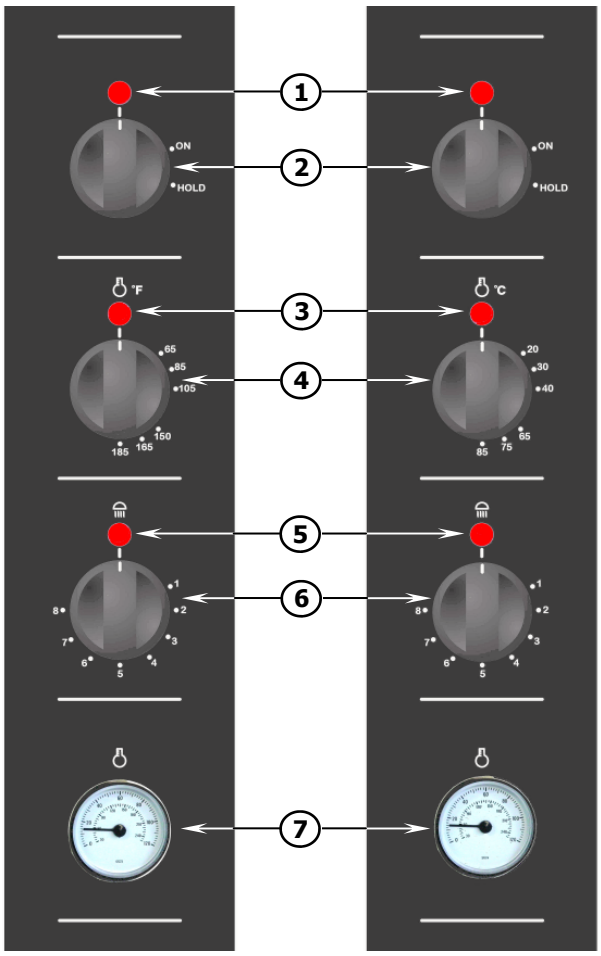

Description of Controls

1 Power 'On' Indicator Light

Indicator light illuminates when the 'Function' Switch is turned to 'ON' or 'HOLD'.

2 Function Control

I	Unit is 'Off'.
ON	Unit is in Proofing Mode (Power 'On' Indicator Light illuminates).
HOLD	Unit is in Holding Mode (Power 'On' Indicator Light illuminates).

3 Heating 'On' Indicator Light

Indicator light illuminates when 'Thermostat Heating' is turned 'ON' and the elements are cycling 'ON' to maintain set temperature.

4 Thermostat Control

Controls air temperature in the Proofer / Holding Cabinet.

Temperature Range -	0 - 85°C / 32 - 185°F.
Proofing Range -	20 - 40°C / 65 - 105°F.
Holding Range -	65 - 85°C / 150 - 185°F.

5 Humidity 'On' Indicator Light

Indicator light illuminates when 'Humidity Control' is turned 'ON' and elements are cycling 'ON' to maintain the set humidity. (Controls the cabinet humidity in PROOF Mode only).

6 Humidity Control

Controls humidity level in the proofer / holding cabinet.

Controls the cabinet humidity in PROOF Mode only.

1 to 5	Suggested settings for butter based pastries (Croissants, Danish Pastries etc).
5 to 8	Suggested settings for yeast based breads and doughs.

7 Thermometer

Indicates the cabinet temperature.
Dual Centigrade and Fahrenheit scale.

Operating in 'Proof' Mode

Caution

Take care when opening the proofer / holding cabinet door during the Proofing Mode. Let hot air and steam escape before removing or replacing food as the steam produced can cause steam burns.

Ensure that power to the proofer / holding cabinet is switched 'On' and the mains water supply is turned 'On'.

It is recommended that the proofer / holding cabinet is pre-heated empty before loading with product.

- Warm days, pre-heat for up to 10 minutes.
- Cool days, pre-heat for up to 30 minutes.

1. **Set the Function Control (2) to 'ON'.**

   The Power 'On' Indicator light (1) will illuminate when the Function Control (2) is in the 'ON' position.

2. **Set Thermostat Control (4) to desired proofing temperature (20-40˚C / 65-105˚F).**

   The Heating 'On' Indicator light (3) will turn 'Off' when the cabinet has reached the set temperature.

3. **Set Humidity Control (6) to the desired level.**

   As a general rule, set the humidity to between the 6 to 7 marks on the humidity control.

   Increase or decrease the humidity control as required for specific product types.

   Humidity is required only to prevent the surface of the product from dry skinning. Do not set the humidity to high as the product will become sticky and wet on the surface. A silky to touch surface on the product is a general recommendation for correct humidity levels.

   Avoid excess humidity levels as this will also create excess condensation in the interior of the cabinet.

NOTE: Butter based product requires much less humidity than breads

Operating in 'Hold' Mode

Caution

Some parts of this proofer / holding cabinet will become HOT during the Hold Mode and could cause burns if touched accidentally.

Ensure that power to the proofer / holding cabinet is switched 'On'.

1. **Set the Function Control (2) to 'HOLD'.**

   The 'Power On' Indicator light (1) will illuminate when the Function Control (2) is in the 'HOLD' position.

2. **Set the Thermostat Control (4) to the desired Holding Temperature. (65-85˚C / 150-185˚F).**

   The Heating 'On' Indicator light (3) will turn 'Off' when the cabinet has reached the set temperature.

3. **Humidity Control (6).**

   The humidity control function is not used in the 'HOLD' Mode. The setting on this dial will have no effect as the wet element, water level sensor and water solenoid are disabled.

4. **Thermometer (7).**

   The thermometer will give an accurate reading of the cabinet temperature to ensure that the product being held is at the correct temperature.

Cleaning Guidelines

Caution

Always turn 'Off' the electrical power supply at the mains supply before commencing cleaning.

This proofer / holding cabinet is not water proof. Do not use water jet spray to clean interior or exterior of the appliance.

To achieve the best results, cleaning must be regular and thorough. If any small faults occur, have them looked at promptly. Don't wait until they cause a complete breakdown.

NOTE:

- **Carefully read and follow the safety instructions on the label of the cleaning product to be used.**
- **DO NOT use harsh abrasive scouring pads or abrasive detergents as they could damage the oven.**
- **Ensure that any detergent or cleaning material has been completely removed after each cleaning.**

To keep your proofer / holding cabinet clean and operating at peak efficiency, follow the procedures shown below:-

Proofer / Holding Cabinet Cleaning

NOTE:

- **If the proofer / holding cabinet usage is very high, the cleaning procedure should be carried out on a more frequent basis.**

Stainless Steel Surfaces

a. Clean exterior surfaces of proofer / holding cabinet with, a damp cloth moistened with a mild detergent solution, or a soft bristled brush.

b. Hardened deposits or discolouration may require a good quality stainless steel cleaner. Always apply cleaner when appliance is cold and rub in direction of the grain.

c. Dry all components thoroughly with a dry cloth and polish with a soft dry cloth.

d. Ensure that proofer / holding cabinet chamber is cool. Do not use wire brushes, steel wool or other abrasive materials to clean interior of cabinet.

e. Once a week, remove side racks and water tank and clean any build up of product from proofer / holding cabinet interior, using a mild anti bacterial detergent and hot water solution and a soft bristled brush.

f. Dry proofer / holding cabinet thoroughly with a soft dry cloth.

Side Racks

a. To remove side racks for cleaning, take hold of top and bottom of rack and lift front of rack upwards to disengage front upper and lower hangar studs.

b. Swing rack inwards.

c. Take hold of top and bottom rack at the centre and lift rear of rack upwards to disengage rear upper and lower hangar studs. Lift rack out of proofer / holding cabinet.

d. Clean racks with a mild anti bacterial detergent and a hot water solution, using a soft bristled brush.

e. Dry racks thoroughly with a dry cloth and polish with a soft dry cloth.

f. To refit racks, engage the top and bottom, rear rack keyholes onto the rear hanger studs.

g. Swing rack back against the front top and bottom front hanger studs.

h. Lift up and push top and bottom of rack onto front upper and lower hanger studs.

i. Push down on the rack to ensure that it is fully engaged onto the upper and lower hanger studs.

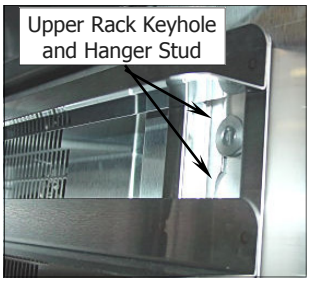

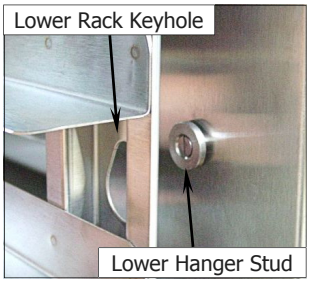

NOTE: Ensure that the rack is securely fitted and that ALL the studs are engaged into the rack key holes.

Water Tank

It is recommended that this procedure is carried out once a week. Frequency of cleaning the element may be increased or decreased depending on the quantity of scale depositing on the element.

a. To remove the water tank, take hold of top and bottom of rack and lift front of rack upwards to disengage front upper and lower hangar studs.
b. Swing the RH side rack inwards to allow access to the water tank.
c. Remove the water tank by lifting the tank off its hanger studs. Clean with warm soapy water. Rinse thoroughly and refit.

Water Tank Element

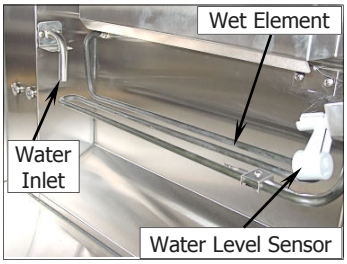

a. When wet element becomes limed / scaled up, remove water tank and clean as shown previously.
b. Refit water tank and half fill with white vinegar or acetic acid, then fill to normal level with water. Switch 'On' unit, and turn Humidity Control to '8'. Operate for approximately 30 minutes.
c. When cooled, remove water tank and clean element with a damp cloth. Rinse out water tank and refit to the unit.
d. Turn 'On' water supply.

Condensation Channel

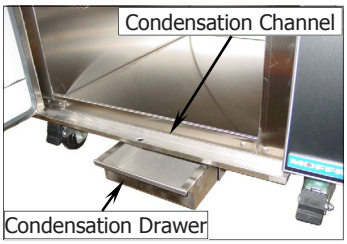

a. Below the door is a condensation channel for collecting door condensation run-off. This is then fed into a condensation drawer.
b. Empty condensation drawer on a regular basis and once a week, wipe out condensation channel and drawer with a damp cloth moistened with warm water and a mild detergent solution.
c. Dry with a soft dry cloth.

Door

a. Wash door with warm water and a mild detergent solution using a soft sponge in straight lines up and down inner and outer surfaces of door. Rinse with clean, warm water and dry off.
b. Dry the door thoroughly with a soft dry cloth.
c. Clean door glass with a conventional glass cleaner.

Door Seal

Clean door seal with warm water and a detergent solution using a soft sponge when required.

Should the door seal become dirty, it can be removed for a more thorough cleaning should this be necessary:-

a. To remove 1 piece seal, pull seal forward until it pulls out of location groove around the door.
b. ***Note the way seal is fitted to door, with lip facing inwards.***
c. Check seal for wear and damage and replace if damaged or worn.
d. The seal may be washed in a sink, taking care not to cut or damage the seal.
e. Dry the seal thoroughly with a soft dry cloth before re-fitting.
f. To refit seal, have seal lip facing into centre of door.
g. Press seal into locating groove around door until seal is properly located.

Lamp Glass

The P8 and P12 proofer / holding cabinets are fitted with 2 halogen lamps. These are fitted on the L/H inner side panel, behind L/Hand side rack.

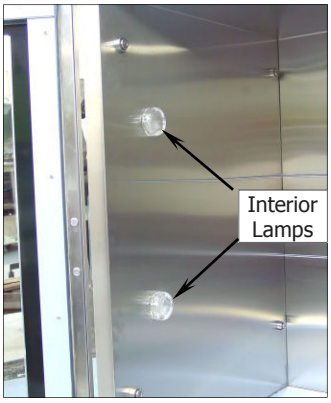

a. To remove lamp glass, ensure that the L/Hand side rack is removed as shown on the prevous page.
b. Unscrew lamp glass anti-clockwise to remove.
c. Remove seal fitted between lamp glass and holder.
d. Wash the lamp glass and seal using a soft sponge and warm water with a detergent solution. Rinse with clean, warm water and dry off.
e. Dry lamp glass thoroughly with a dry cloth.
f. To refit lamp glass, screw in clockwise. **Do not over tighten lamp glass.**
g. Refit L/Hand side rack as shown on prevous page.

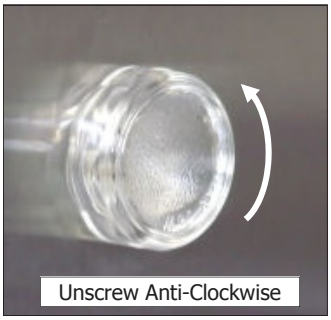

Periodic Maintenance

NOTE: All maintenance operations should only be carried out by a qualified service person.

Controls and mechanical parts should be checked and adjusted periodically by a qualified service person. It is recommended that the appliance is serviced every 6 months.

Fault Finding

This section provides a reference to the more common problems that may occur during the operation of your proofer / holding cabinet. This fault finding guide is intended to help you correct, or at least accurately diagnose problems with your proofer / holding cabinet.

When fault finding a problem, always use a process of elimination starting with the simplest solution and working through to the most complex. Never overlook the obvious.

You may encounter a problem not covered in this section, please contact your service provider who will require the following information:-

- **Model and Serial Number of proofer / holding cabinet, can be found on the Technical Data Plate located on front right hand side panel of the cabinet.**

Fault	Possible Causes	Remedy
The Proofer / Holding Cabinet does not operate / start.	Mains isolating switch on the wall, circuit breaker or fuses are 'Off' at the power board.	Turn 'On'.
	Function Control is faulty.	Call for service.
No Dry Heat.	Function Control is 'Off'.	Turn 'On' the Function Control.
	Thermostat Control is 'Off'.	Turn 'On' the Thermostat Control.
	Function Control faulty.	Call for Service.
	Thermostat Control faulty.	Call for Service.
	The element is faulty.	Call for Service.
No Humidity.	Unit is in HOLD mode	Switch unit to PROOF mode. (Humidity is only generated in PROOF mode).
	Low water level in trough.	Solenoid or Float Switch faulty - Call for service.
	No water in trough.	Refer to 'No Water Supply' below.
	Humidity set too low.	Set humidity to higher setting.
	Humidity Thermostat faulty.	Call for service.
	Wet Element faulty.	Call for service.
No Water Supply.	Water turned 'Off' at mains supply.	Check mains supply and turn 'On' water.
	Water Solenoid faulty.	Call for service.
	Float Switch faulty.	Call for service.
	Relay Faulty.	Call for service.
Slow Recovery.	Overloading of cabinet.	Reduce batch size.
	Door opened unnecessarily.	Do not open unnecessarily.
The Proofer / Holding Cabinet lights not illuminating.	Blown bulbs.	Replace bulbs.
	Function Control faulty.	Call for service.
	Blown Fuse.	Call for service.
Fan does not operate.	Fan obstructed.	Clear obstruction.
	Fan motor faulty.	Call for service.
	Function Control faulty.	Call for service.
Door does not close.	Tray in way of door.	Correctly position tray in rack.
	Door seal obstruction.	Correctly refit door seal. (Refer to the 'Cleaning and Maintenance' Section).

Electrical Schematic P8M - P12M Proofer Holding Cabinets.

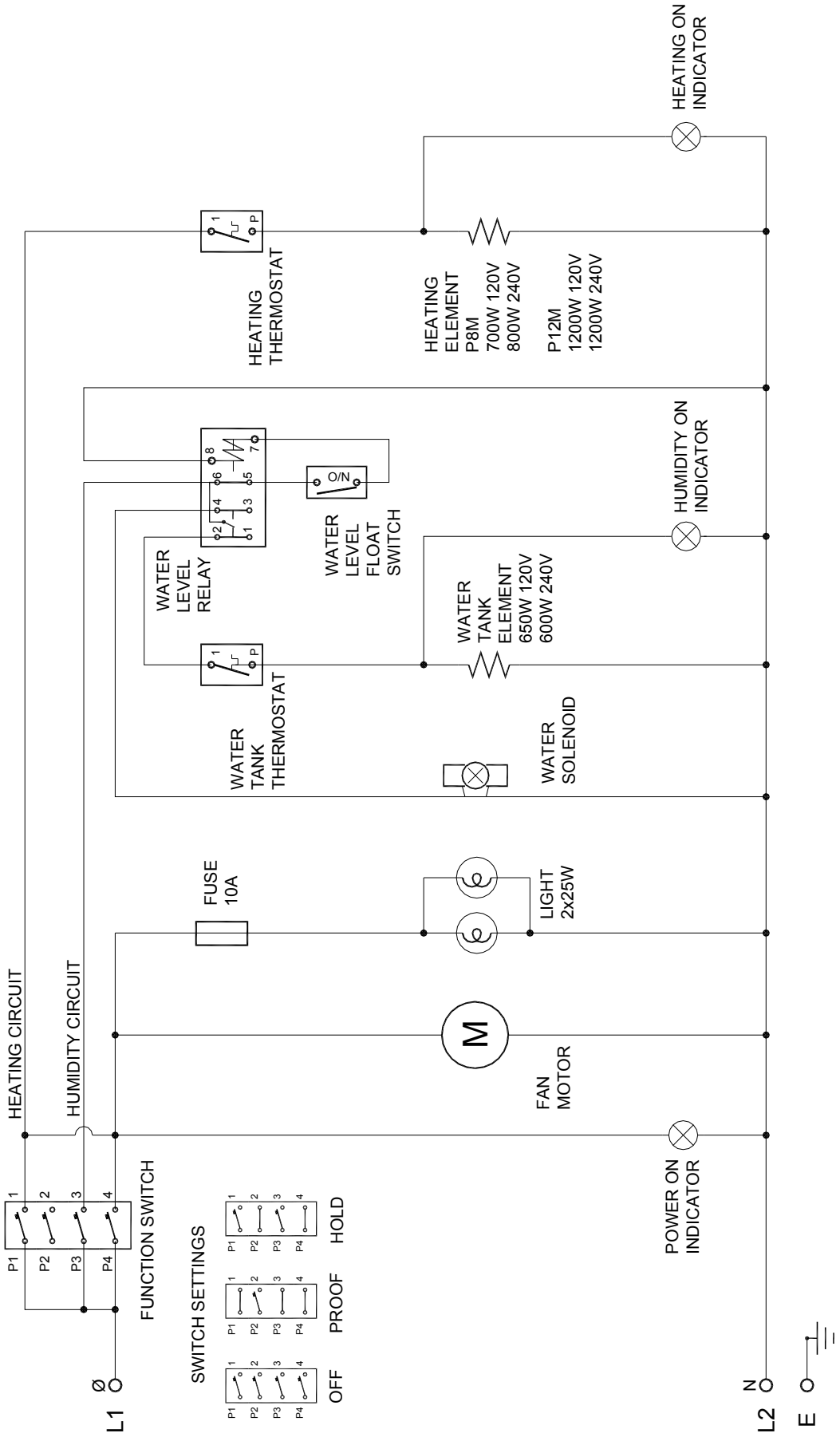

Replacement Parts List

Important:

Only genuine authorized replacement parts should be used for the servicing and repair of this proofer / holding cabinet. The instructions supplied with the parts should be followed when replacing components.
For further information and servicing instructions, contact your nearest authorized service provider or Turbofan Dealer.

When ordering replacement parts, please quote the part number and the description as listed below. If the part required is not listed below, request the part by description and quote model number and serial number which is shown on the Technical Data Plate.

Item	Description		P8	P12
234078	Wet Element, 240V, 600W		●	●
234079	Wet Element, 120V, 650W		●	●
234080	Dry Element, 240V, 1200W			●
234081	Dry Element, 120V, 1200W			●
234191	Dry Element, 240V, 800W		●	
234190	Dry Element, 120V, 700W		●	
013431K	Fan Motor Kit, (208/240V, 50/60Hz)		●	●
025387K	Fan Motor Kit, (120V)		●	●
022042	Fan Blade		●	●
021534	Relay, 240V		●	●
021535	Relay, 110V		●	●
024527	Humidity Thermostat, 30-85°C / 86-185°F		●	●
022787	Air Thermostat, 0-85°C / 32-185°F		●	●
022789	Switch - 3 Position		●	●
022788	Thermometer		●	●
234447	Knob Indexed		●	●
234803	Fuse 10A,		●	●
234802	Fuse Holder 16A, 250V		●	●
234737	Indicator Red LED 9 mm, 110 - 250V		●	●
233115	Oven Lamp Lens		●	●
233883	Oven Lamp Seal		●	●
231814	Lamp Bulb, G9, 25W, Halogen, 230V		●	●
233884	Lamp Bulb, G9, 25W, Halogen, 120V		●	●
234626	Door Hinge Top		●	●
234627	Door Hinge Bottom		●	●
018947	Magnet Catch		●	●
234570	Door Seal - P8		●	
234537	Door Seal - P12			●
233528	Float Switch		●	●
234348	Water Solenoid, 90° Outlet, 240V		●	●
234349	Water Solenoid, 90° Outlet, 120V		●	●
025922	Adaptor Brass	**(USA / Canada only)**	●	●
021527	Washer Rubber	**(USA / Canada only)**	●	●
235022	Rack LH - P8		●	
235023	Rack RH - P8		●	
235024	Rack LH, 12 Tray, P12			●
235025	Rack RH, 12 Tray, P12			●
235026	Rack LH, 9 Tray, P12			●
235027	Rack RH, 9 Tray, P12			●
234216	Castor 75 mm, Rigid Rubber		●	●
234217	Castor 75 mm, Swivel Rubber d/brake		●	●
234347	Filter Head Kit	**Optional**	●	●
234562	Water Filter Cartridge	**Optional**	●	●

Reversing the Proofer Door

NOTE:

- **Refit all screw fasteners using a low-mid strength thread locking adhesive unless otherwise stated.**
- **Door reversal should only be carried out by a suitably competent person.**

1. Whilst supporting door remove bottom hinge body (two screws) and remove door.
2. Remove top hinge body (two screws).
3. Remove four cover screws covering alternate hinge holes. Refit cover screws on opposite side.
4. Remove the LH side panel (four screws).

When Changing to RH Hinged Door.

1. Remove the LH magnet plate cover screws and clips from inside LH wall (Do not fit cover screws to old magnet position).
2. Transfer door magnet plate to the opposite side.

When Changing to LH Hinged Door.

1. Remove magnet plate and transfer to the opposite side.

Important: Redundant plate holes in LH side wall must be filled to stop steam ingress into the wall cavity.

2. Fit bottom hinge body to top on opposite side, centre hinge on slots.
3. Whilst holding door in place fit remaining hinge body to bottom, securing door in position.
4. Ensure door seal is removed and re-fitted with the join in the seal at bottom.
5. Refit the LH side panel.