Waldorf®
800 SERIES

Installation and Operation Manual

Electric Pasta Cooker

PC8140E PCL8140E

PC8140E-7 PCL8140E-7

Date Purchased

Serial Number

Dealer

Service Provider

For use in GB & IE

232805-5

MANUFACTURED BY

Moffat Limited
Christchurch
New Zealand

INTERNATIONAL CONTACTS

AUSTRALIA

Moffat Pty Limited
E.Mail: vsales@moffat.com.au
Main Office: (tel): +61 (03) 9518 3888
(fax): +61 (03 9518 3833
Service: (tel): 1800 622 216
Spares: (tel): 1800 337 963
Customer Service: (tel): 1800 335 315
(fax): 1800 350 281

CANADA

Serve Canada
Web: www.servecanada.com
E.Mail: info@servecanada.com
Sales: (tel): 800 551 8795 (Toll Free)
Service: (tel): 800 263 1455 (Toll Free)

NEW ZEALAND

Moffat Limited
Web: www.moffat.co.nz
E.Mail: sales@moffat.co.nz
Main Office: (tel): 0800 663328

UNITED KINGDOM

Blue Seal
Web: www.blue-seal.co.uk
E.Mail: sales@blue-seal.co.uk
Sales: (tel): +44 121 327 5575
(fax): +44 121 327 9711
Spares: (tel): +44 121 322 6640
(fax): +44 121 327 9201
Service: (tel): +44 121 322 6644
(fax): +44 121 327 6257

UNITED STATES

Moffat
Web: www.moffat.com
Sales: (tel): 800 551 8795 (Toll Free)
(tel): +1 336 661 1556
(fax): +1 336 661 9546
Service: (tel): 800 858 4477 (Toll Free)
(tel): +1 366 661 1556
(fax): +1 336 661 1660

REST OF WORLD

Moffat Limited
Web: www.moffat.co.nz
E.Mail: export@moffat.co.nz

The reproduction or copying of any part of this manual by any means whatsoever is strictly forbidden unless authorized previously in writing by the manufacturer.

In line with policy to continually develop and improve its products, Moffat Ltd. reserves the right to change the specifications and design without prior notice.

© Copyright Moffat Ltd. March 2011.

PC(L)**8140E ELECTRIC PASTA COOKER - (Single Tank - 40 Ltr)**

Introduction **2**

Specifications **3**
Model Numbers Covered in this Specification
General
Optional Accessories
Electrical Supply Requirements
Electrical Connection
Water Supply Requirements

Dimensions **4**

Installation **5**
Installation Requirements
Unpacking
Location
Clearances
Assembly
Electrical Connection
Water Connection
Drainage Connection
Commissioning

Operation **8**
Operation Guide
Description of Controls
Before Use
Filling the Tank
Operating the Pasta Cooker
Turning 'OFF' the Pasta Cooker

Cleaning and Maintenance **11**
General
Draining and Cleaning
After Each Use
Daily Cleaning
Weekly Cleaning
Periodic Maintenance

Fault Finding **14**

Wiring Schematic **15**

Replacement Parts List **16**

Introduction

We are confident that you will be delighted with your WALDORF Electric Pasta Cooker and it will become a most valued appliance in your commercial kitchen.
To ensure you receive the utmost benefit from your new WALDORF Appliance, there are two important things you can do.

Firstly:

Please read the instruction book carefully and follow the directions given. The time taken will be well spent.

Secondly:

If you are unsure of any aspect of the installation, instructions or performance of your appliance, contact your WALDORF dealer promptly. In many cases a phone call could answer your question.

CE Only:

These instructions are only valid if the country code appears on the appliance. If the code does not appear on the appliance, refer to the supplier of this appliance to obtain the technical instructions for adapting the appliance to the conditions for use in that country.

WARNING:

IMPROPER INSTALLATION, ADJUSTMENT, ALTERATION, SERVICE OR MAINTENANCE CAN CAUSE PROPERTY DAMAGE, INJURY OR DEATH. READ THE INSTALLATION, OPERATING AND MAINTENANCE INSTRUCTIONS THOROUGHLY BEFORE INSTALLING OR SERVICING THIS APPLIANCE.

WARNING:

GREAT CARE MUST BE TAKEN BY THE OPERATOR TO USE THE EQUIPMENT SAFELY TO GUARD IT AGAINST RISK OF FIRE.

- **THE APPLIANCE MUST NOT BE LEFT 'ON', UNATTENDED.**
- **IT IS RECOMMENDED THAT A REGULAR INSPECTION IS MADE BY A COMPETENT SERVICE PERSON TO ENSURE CORRECT AND SAFE OPERATION OF YOUR APPLIANCE IS MAINTAINED.**
- **DO NOT STORE OR USE GASOLINE OR OTHER FLAMMABLE VAPOURS OR LIQUIDS IN THE VICINITY OF THIS OR ANY OTHER APPLIANCE.**
- **DO NOT SPRAY AEROSOLS IN THE VICINITY OF THIS APPLIANCE WHILE IT IS IN OPERATION.**

CAUTION:

This appliance is;

- **For professional use and is to be used by qualified persons only.**
- **Only authorised service persons are to carry out installation, and servicing operations.**
- **Components having adjustments protected (e.g. paint sealed) by the manufacturer should not be adjusted by the user / operator.**
- **DO NOT operate the appliance without the legs supplied, fitted.**

Model Numbers Covered in this Specification

PC[1]8140E	**PASTA COOKER (10.5 kW).**
PC[1]8140E-7	**PASTA COOKER (7.0 kW).**

NOTE: [1]: - - Standard Back Models.
L - Low Back Models.

General

A commercial heavy duty, electric, high performance Pasta Cooker designed for cooking in a commercial high production output site. The boiling medium is contained within a heavy gauge stainless steel tank, heated by a 3 coil heavy duty element within the tank.
This Pasta Cooker features an Over Temperature Safety Cut Out System.
An open tank design and pivoting element system to make cleaning a simple and easy task.

Optional Accessories

This appliance can be fitted with the following optional accessories, (refer to the 'Replacement Parts List' for details).

- Plinth Kit.
- Basket 320 x 165 mm.

Electrical Supply Requirements

		Standard Ex-Factory Model	Convertible to:
PC8140E	10.5 kW	3P+N+E, L1=L2=L3 = 15A @ 240V	1P+N+E, 44A @ 240V
PC8140E-7	7.0 kW	1P+N+E, 30A @ 240V	3P+N+E, L1=L2=L3 = 10A @ 240V

Electrical Connection

WARNING:

THIS APPLIANCE MUST BE EARTHED. IF THE SUPPLY CORD IS DAMAGED, IT MUST BE REPLACED BY A SUITABLY QUALIFIED PERSON IN ORDER TO AVOID A HAZARD.

Electrical supply connection point is located 56 mm from the right hand side, 529 mm from the rear of the appliance and 489 mm from the floor.

When connecting a this electric appliance to the mains supply, ensure that the following is carried out:-

- The supply cord shall not be lighter than ordinary tough rubber sheathed (oil resistant) cord. e.g. H05 RN-F with sufficient current carrying capacity cable sizes.
- The branch supply line shall be overload protected.
- The point of connection shall be as close as practicable to the appliance and shall have an isolating switch accessible during manual operation of the appliance.
- The supply cord shall be protected against any mechanical or thermal damage.

Refer to the appropriate wiring standards for the size of cable that is to be supplied to an appliance for the current drawn on that line.

Water Supply Requirements

A cold water supply must be connected to the water inlet connection (R $^1/_2$" BSP), located 49mm from the LH side, 556 mm from rear and 139 mm from the floor. This should be plumbed in, in accordance with National / Local Codes covering installation.

Maximum water supply pressure 550 kPa (80 psi).

Tank capacity - 40 ltrs of water.

PC(1)8140E-Pasta Cooker

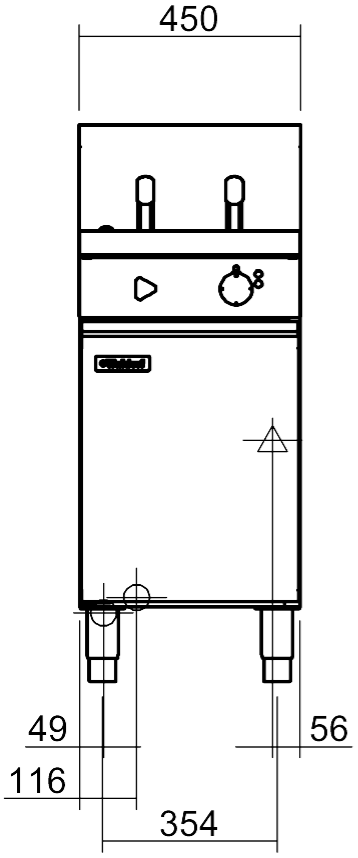

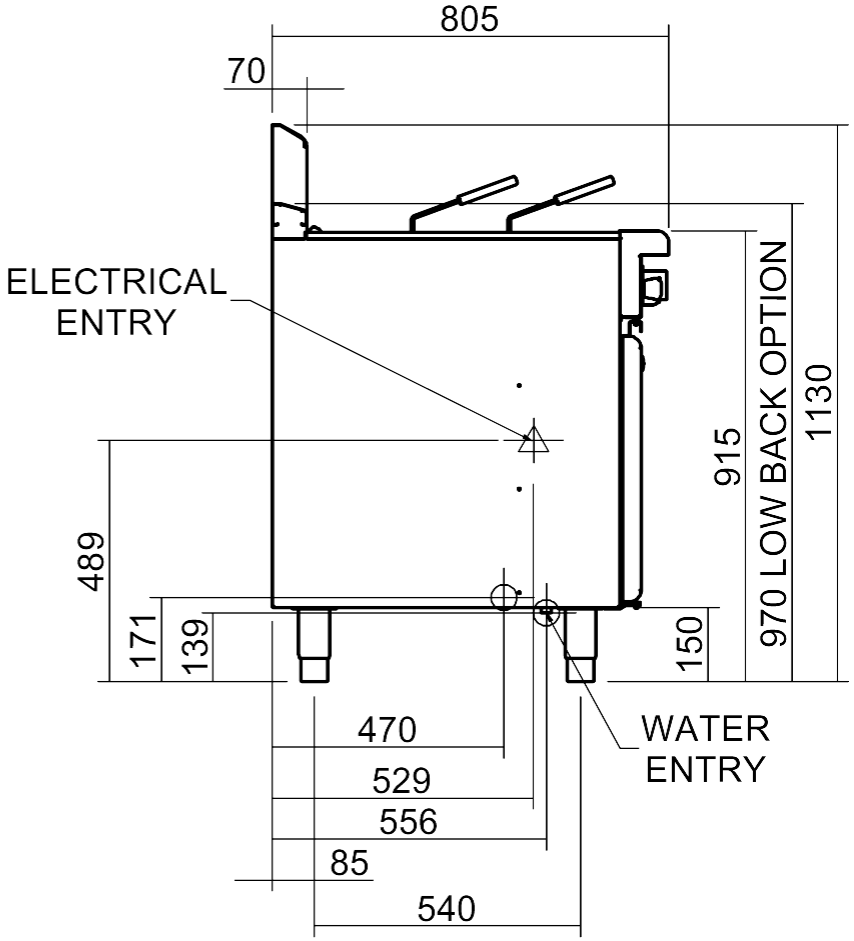

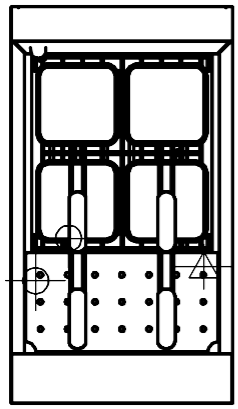

Installation Requirements

NOTE:

- **It is most important that this appliance is installed correctly and that operation is correct before use. Installation shall comply with local, electrical health and safety requirements.**

Waldorf Electric Pasta Cookers are designed to provide years of satisfactory service and correct installation is essential to achieve the best performance, efficiency and trouble-free operation.

This appliance must be installed in accordance with National installation codes and in addition, in accordance with relevant National / Local codes covering electrical, fire safety and health and safety.

Australia / New Zealand:	**AS / NZS3000**	- Wiring Rules.
United Kingdom:	**BS7671**	- Requirements for Electrical Installations.

Installations must be carried out by qualified service persons only. Failure to install the equipment to the relevant codes and manufacturer's specifications shown in this section will void the warranty.

Components having adjustments protected (e.g. paint sealed) by manufacturer, are only to be adjusted by an authorised service agent. They are not to be adjusted by the installation person.

Unpacking

- Remove all packaging and transit protection from the appliance including all protective plastic coating from the door outer panel and exterior stainless steel panels.
- Check equipment and parts for damage. Report any damage immediately to the carrier and distributor.
- Report any deficiencies to the distributor who supplied the appliance.
- Check that the available electrical supply is correct to that shown on the rating plate located on the inside of the access door.
- Check that the following parts have been supplied with the appliance:

	PC8140E / PC8140E-7
Baskets 165 x 165 mm	4
Basket Support Frame	1

Location

1. Any appliance requires adequate clearance and ventilation for optimum and trouble-free operation. The minimum installation clearances shown below are to be adhered to.
2. Position the appliance in its approximate working position.
3. The legs must always be fitted. Ensure that the legs are securely attached.

Clearances

	Combustible Surface	**Non Combustible Surface**
Left / Right hand side	50 mm	0 mm
Rear	25 mm	0 mm

NOTE:

- **Only non-combustible materials can be used in close proximity to this appliance.**
- **In order to facilitate easy operation, drainage and servicing of the appliance, a minimum of 600 mm clearance should be maintained at the front of the appliance.**

Assembly

This model is delivered completely assembled. Ensure that the adjustable feet are securely attached.

NOTE:

- **This appliance is fitted with adjustable feet to enable the appliance to be positioned securely and level. This should be carried out on completion of the electrical connection. Refer to the 'Electrical Connection' section below.**

Electrical Connection

NOTE: ALL ELECTRICAL CONNECTIONS MUST ONLY BE CARRIED OUT BY A QUALIFIED PERSON.

Each pasta cooker should be connected to an adequately protected power supply and isolation switch mounted adjacent to, but not behind the pasta cooker. This switch must be clearly marked and readily accessible in case of fire.

1. Check that the electricity supply is correct as shown on the Rating Plate attached to the inside of the access door.
2. The supply terminal connections are located at the lower front of the pasta cooker.
3. Open the door and remove the service panel (4 screws) located below the control panel, to allow connection access for the electrical supply.
4. Bring the supply cable up through the grommet at the back of the pasta cooker, and through the compression type gland provided on the rear of the main electrical switchgear panel.
5. Connect the mains supply to L1, L2 and L3 switch connections for 3 phases.
6. Connect neutral and earth conductors to the appropriately marked terminals on the terminal block.
7. For all connections ensure that conductors are secure and appropriately terminated.
8. Tighten the cable gland to secure against tension on the cable.

NOTE:

- **This appliance must be grounded / earthed.**
- **Fixed wiring installations must incorporate an all-pole disconnection switch.**

Water Connection

NOTE: The water connection shall be installed in accordance with local water regulations in force and the applicable standard / code, e.g. EN 1717 in UK / Ireland, PCA in Australia.

A cold water supply must be connected to the water inlet connection ($R^1/_2$" BSP), located 49 mm from the LH side, 556 mm from rear and 139 mm from the floor.

The water inlet pressure must be as follows:-

Minimum water supply pressure 150 kPa (22 psi).
Maximum water supply pressure 550 kPa (80 psi).

Drainage Connection

- The water is drained from the appliance by means of a valve located behind the front access door.
- A waste water tundish must be fitted below the appliance drain outlet. This should be a minimum of 127 mm (5”) major diameter.
- If required the drain outlet can be extended in order to exit above the tundish. All drain piping must be with materials suitable for conveying boiling water.
- Drain connection is R1" BSP drain / overflow.

Commissioning

The following commissioning checks must be carried out before the pasta cooker is handed over for use, to ensure that the unit operates correctly and the operator(s) understand the correct operating procedure.

1. Before leaving the new installation;
   a. Check the following functions in accordance with the operating instructions specified in the 'Operation' section of this manual.
      - Check the current draw and loading for the equipment. Refer to the ‘Specifications’ section of this manual for the correct electrical requirements.
      - Check that all the connections are correct and that all panels have been re-fitted.
      - Check that the unit functions in accordance with the operating instructions.
      - Ensure that this instruction manual is left with the appliance.
      - Ensure that all the relevant details and contacts have been added to the front of this manual.

   b. Ensure that the operator has been instructed in the correct operation and shutdown procedure for the appliance.

2. This manual must be kept by the owner for future reference and a record of Date of Purchase, Date of Installation and Serial Number of Unit recorded and kept with this manual. (These details can be found on the Rating Plate fitted to the inside of the access door and in the 'Specifications' section of this manual.

NOTE:

- **If for some reason it is not possible to get the unit to operate correctly, disconnect the electrical power supply and contact a qualified service person. The supplier of this unit will be able to recommend a suitable person.**
- **Make sure that the electrical supply is disconnect before any service or maintenance work is carried out.**

Operation Guide

CAUTION:

- **This appliance is for professional use and is only to be used by qualified persons.**
- **Only qualified service persons are to carry out installation and servicing operations.**
- **Components having adjustments protected (e.g. paint sealed) by the manufacturer should not be adjusted by the user / operator.**

1. Waldorf Pasta Cookers have been designed to provide simplicity of operation and 100% safety protection.
2. Improper operation is therefore almost impossible, however bad operation practices can produce a poor quality product. To use this pasta cooker correctly please read the following sections carefully;

    - Description of Controls.
    - Before Use.
    - Filling the Tank.
    - Operating the Pasta Cooker.
    - Turning 'Off' the Pasta Cooker.
    - Cleaning and Maintenance.

Description of Controls

- A commercial heavy duty, electric pasta cooker using a 3 coil heavy duty, pivoting element system.
- Available in single model type.
- This model is fitted with single 3 coil heavy duty, pivoting element and is controlled by a 4 position switch and a thermostat for variable speed and temperature control.
- Open tank and pivotal element system design to simplify cleaning operation.

PC-8140E Pasta Cooker Controls

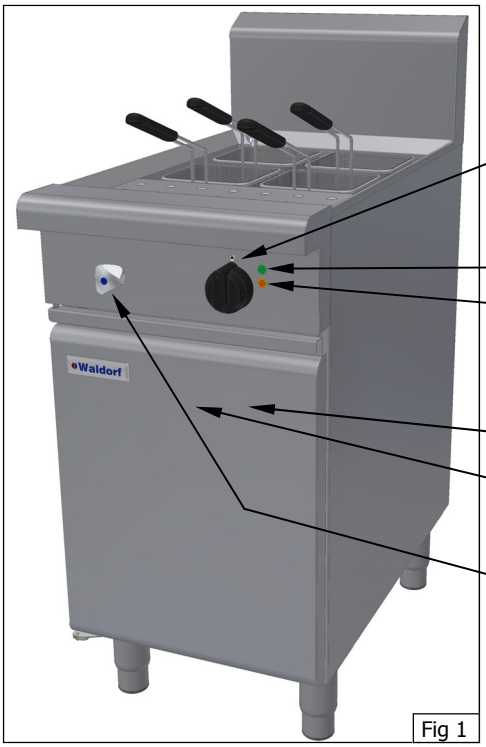

Fig 1

Element Control Knob

O OFF Position

1 SIMMER

2 BOIL

3 RAPID

Power Indicator Neon (Green)

Heating Indicator Neon (Amber)

Thermostat Knob (Behind Access Door)

Overtemp Reset (Behind Access Door)

Water Control Valve

Before Use

WARNING:

GREAT CARE MUST BE TAKEN BY THE OPERATOR TO USE THE PASTA COOKER SAFELY, TO GUARD AGAINST THE RISK OF INJURY AND FIRE.

- **DO NOT LEAVE THE PASTA COOKER UNATTENDED DURING OPERATION.**
- **DO NOT OVER FILL THE WATER IN THE PASTA COOKER ABOVE THE UPPER FILL LEVEL MARK.**
- **DO NOT ALLOW THE WATER IN THE PASTA COOKER TO FALL BELOW THE LOWER LEVEL MARK.**
- **DO NOT USE FLAMMIBLE SOLVENTS AND CLEANING AIDS ON OR IN CLOSE PROXIMITY TO THE PASTA COOKER WHILST THE PASTA COOKER IS STILL HOT.**

1. Check that the electrical supply is switched 'On'.
2. Check that there are no foreign articles in the tank.

Filling the Tank

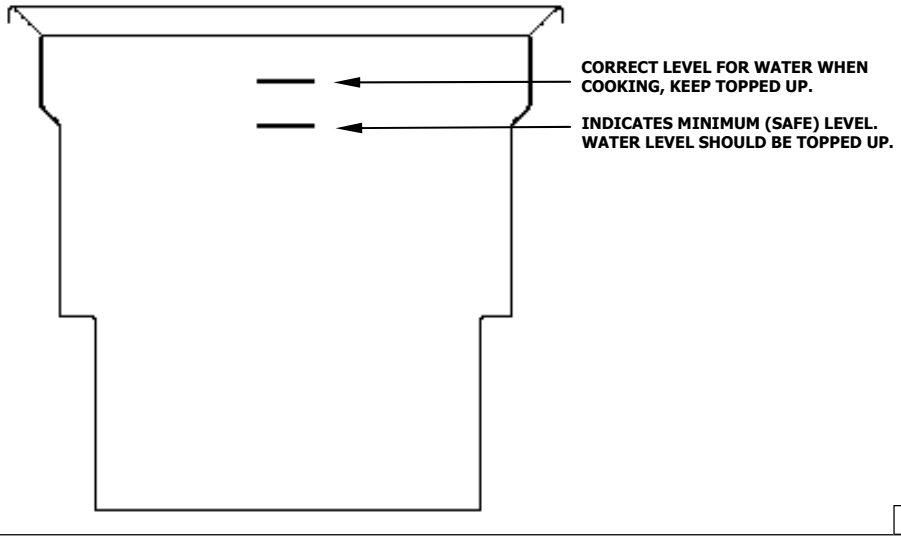

Fig 2

NOTE: Tank capacity - 40 Ltrs of water.

1. Before filling the tank, always check that the drain valve behind the access door is closed. A locking slide is provided on the valve and this should always be locked in position during use. (See Fig 3 and 4 in the 'Cleaning and Maintenance' section).
2. Turn the water supply 'On'. Open the appliance water valve and fill the tank with water.
3. The water level will remain at a constant height as there is an overflow at the front of the tank.
4. During cooking, the water level will reduce as it evaporates as steam when boiling and when it overflows as loaded baskets are dropped into the tank.
5. To maintain the correct water level, the water tap should be adjusted to give a water flow out of the water supply nozzle that just causes water to continually flow out of the overflow.

   This method provides:

   - A maintained water level for cooking.
   - Skimming or flushing effect to prevent the cooking water becoming gummed up with pasta residue.

Operating the Pasta Cooker

CAUTION:

Do NOT turn 'On' the element if the tank is empty (No Water). Ensure that the tank is filled to the correct level before turning 'On' the element.

1. Ensure that the pasta cooker tank is full of water to the upper fill mark.
2. Check that the electrical supply is turned 'On' at the mains supply.
3. Select the 'power' level on the element control knob to either Simmer / Boil / or Rapid as required. The 'green' power indicator will illuminate.
4. Rotate the thermostat knob to the desired temperature. The 'amber' heating indicator will illuminate until the temperature is reached.

NOTE: It will take approximately 28 minutes to heat the water in the tank from 20°C to 100°C. (This time has been calculated for the PC8140E Pasta Cooker that is fitted with the 10.5kW element).

Turning 'Off' the Pasta Cooker

1. Rotate the element control knob to the 'O' position, to turn 'Off' the pasta cooker.
2. The 'green' power indicator and the 'amber' heating indicators will extinguish.

General

WARNING:

DO NOT USE FLAMMIBLE SOLVENTS AND CLEANING AIDS ON OR IN CLOSE PROXIMITY TO THE PASTA COOKER WHILST THE COOKER IS STILL HOT.

CAUTION:

Always turn off the electrical supply at the mains supply before cleaning.
This appliance is not water proof.
Do not use water jet spray to clean interior or exterior of this appliance.

Clean the pasta cooker regularly. A clean pasta cooker looks better, will last longer and will perform better. A dirty pasta cooker will hinder the transfer of heat from the cooking surface to the food. This will result in loss of cooking efficiency and food quality.

CAUTION:

If cleaning detergents are allowed to enter the inner parts of the appliance, rusting will occur on the pipe work, installation elements, heating elements, gas fittings and electrical components, this will cause premature failure of the appliance.

NOTE:

- **DO NOT clean the appliance using high pressure water or steam jets.**
- **DO NOT pour water directly over the appliance.**
- **DO NOT use wire brushes. Clean the pan regularly after each use.**
- **DO NOT use combustible liquids to clean the appliance.**
- **DO NOT use harsh abrasive detergents, sharp scrapers, strong solvents or caustic detergents as they will damage the appliance.**
- **DO NOT use any chloric or bleaching detergents to clean the appliance.**
- **Ensure that any detergent or cleaning material has been completely removed after each cleaning operation.**
- **DO NOT use saline or sulfuric acid preparations for descaling the appliance.**
- **Ensure that protective gloves are worn during the cleaning process.**
- **Clean the pan regularly after each use.**

Draining and Cleaning

Opening the Drain Valve

a. Unlock the locking slide on the valve handle by pushing the locking slide away from the valve body to release the valve handle (See Fig 3) and rotate the valve handle downwards (anticlockwise) to open the drain valve (See Fig 4).
b. On completion of the draining and cleaning operation, to close the valve, ensure that the locking slide is in the unlocked position (See Fig 4) and rotate the valve handle upwards (clockwise) to close the drain valve.
c. When the valve is closed, slide the locking slide back over the valve handle to prevent accidental opening of the valve.

NOTE: The valve handle can be secured in the locked position by inserting a padlock through the holes in the locking handle and locking slide to prevent the valve handle from being inadvertently opened.

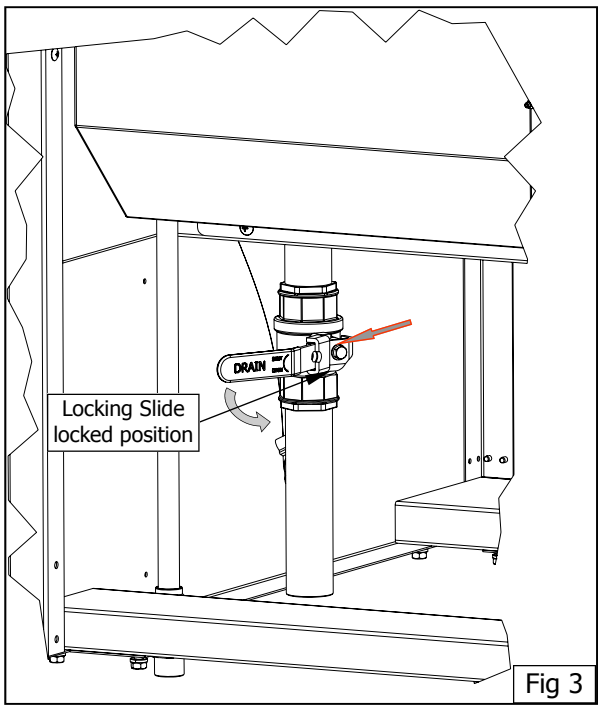

Fig 3

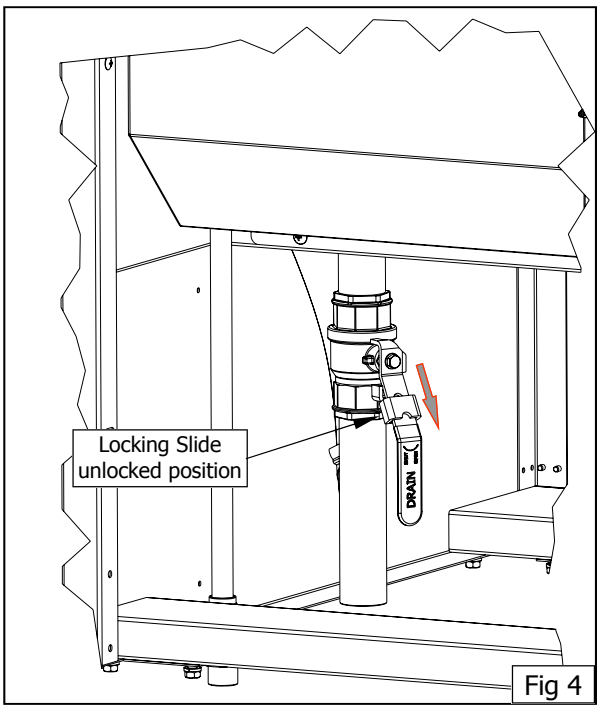

Fig 4

After Each Use

WARNING:

HOT WATER WILL SCALD - DO NOT RUSH THIS JOB.

1. Clean the interior of the pan regularly after each use. Do not use wire brushes on the pan. Clean using a mild detergent and a hot water solution using soft cloth or a soft bristled brush. Dry the appliance thoroughly using a dry clean cloth.

Daily Cleaning

WARNING:

DO NOT ATTEMPT TO MOVE THE PASTA COOKER WHILST THE COOKER IS FULL OF WATER.

BEFORE ATTEMPTING TO MOVE THE PASTA COOKER, ENSURE THAT ALL THE WATER HAS BEEN DRAINED FROM THE TANK. REFER TO THE INFORMATION ON THE PREVIOUS PAGE, ON HOW TO DRAIN THE WATER FROM THE PASTA COOKER.

1. The water should be drained and re-filled regularly. Open the drain valve slowly to minimise splashing. Waste water will drain into the tundish fitted below the appliance drain outlet.
2. When the tank is empty, open the drain valve fully and check for any particles or residue lodged in the valve. Clean out with a stiff nylon brush. Do not use a wire brush or metal rods as these damage the seating in the valve and will eventually lead to valve leakage.
3. If the obstruction in the valve cannot be removed with a brush, use a wooden probe to dislodge any obstruction.
4. Clean the control panel using a damp cloth lightly moistened with a solution of mild detergent and hot water. Dry the control panel thoroughly using a dry clean cloth.
5. Clean the interior and exterior of the pasta cooker regularly at the end of each day. Do not use wire brushes on the pan. Clean using a mild detergent and a hot water solution using soft cloth or a soft bristled brush. Dry the appliance thoroughly using a dry clean cloth.
6. Once the daily cleaning operation is completed, ensure that the drain valve has been closed.

Weekly Cleaning

WARNING:

DO NOT ATTEMPT TO MOVE THE PASTA COOKER WHILST THE COOKER IS FULL OF WATER.

BEFORE ATTEMPTING TO MOVE THE PASTA COOKER, ENSURE THAT ALL THE WATER HAS BEEN DRAINED FROM THE TANK. REFER TO THE INFORMATION ON THE PREVIOUS PAGE, ON HOW TO DRAIN THE WATER FROM THE PASTA COOKER.

NOTE:

- **If the pasta cooker usage is very high, we recommend that the weekly cleaning procedure is carried out on a more frequent basis.**
- **Ensure that protective gloves are worn during the cleaning process.**
- **DO NOT use harsh abrasive detergents, strong solvents, sharp scrapers or caustic detergents as they will damage the surface of the pasta cooker.**
- **Ensure that the water circuit is free of ferrous particles. Any such particles deposited in the bottom of the tank may cause it to rust.**

Thoroughly clean the interior and exterior of the pasta cooker regularly. Do not use wire brushes on the pan. Clean using a mild detergent and a hot water solution using soft cloth or a soft bristled brush. Dry the appliance thoroughly using a dry clean cloth.

NOTE: In order to prevent the forming of rust on the steel components, ensure that the detergent or cleaning material has been entirely removed after each cleaning process.

Stainless Steel Surfaces

a. Clean the control panel with a damp lightly moistened cloth using hot water and a mild detergent solution. Note that the gas control knobs are a push fit onto the gas and water control valve spindles and can be removed to allow cleaning of the front of the control panel.
b. Clean the interior and exterior surfaces of the pasta cooker with hot water, a mild detergent solution and a soft scrubbing brush.
c. Baked on deposits or discolouration may require a good quality stainless steel cleaner or stainless steel wool. Always apply cleaner when the appliance is cold and rub in the direction of the grain.
d. Dry all components thoroughly with a dry cloth and polish with a soft dry cloth.

Periodic Maintenance

NOTE: All maintenance operations should only be carried out by a qualified service person.

To achieve the best results cleaning must be regular and thorough and all controls and mechanical parts should be checked and adjusted periodically by a qualified service person. If any small faults occur, have them attended to promptly. Don't wait until they cause a complete breakdown. It is recommended that the appliance is serviced every 6 months.

If the appliance is not used for long periods, disconnect the mains supply to the pasta cooker and clean the appliance thoroughly.

The appliance should be inspected by an authorized service person at least every 6 months.

Fault Finding

This section provides an easy reference guide to the more common problems that may occur during the operation of your equipment. The fault finding guide in this section is intended to help you correct, or at least accurately diagnose problems with your equipment.

Although this section covers the most common problems reported, you may encounter a problem not covered in this section. In such instances, please contact your local authorised service agent who will make every effort to help you identify and resolve the problem. Please note that the service agent will require the following information:-

- **The Model Trade Name and the Serial Number of the Appliance. (both can be found on the Technical Data Plate located on the appliance.**

Fault	Possible Cause	Remedy
Elements do not heat up.	Check the mains power is supplied to the unit and that a circuit breaker or fuse has not tripped / blown.	Turn 'ON' the power. Reset the circuit breaker or replace the blown fuse.
	Check that the element is flat and that the tilt microswitch is closed.	Adjust the microswitch so that the microswitch is activated when the element is fully down in the flat (cooking position).
	Check that the thermostat setting is correct and that the control knob is set to the 'ON' position.	Replace the thermostat. Call service provider.
Over-temperature thermostat cuts out.	Over-temperature thermostat faulty.	If the element cuts out and the power indicator light also drops below 100ºC, replace the over-temperature thermostat.
	Control thermostat not maintaining set temperature. a. Thermostat out of calibration. b. Thermostat does not open on temperature rise.	Check continuity through the thermostat leads, on temperature rise. If circuit does not open, replace the thermostat. Call service provider.

PC8140E Pasta Cooker

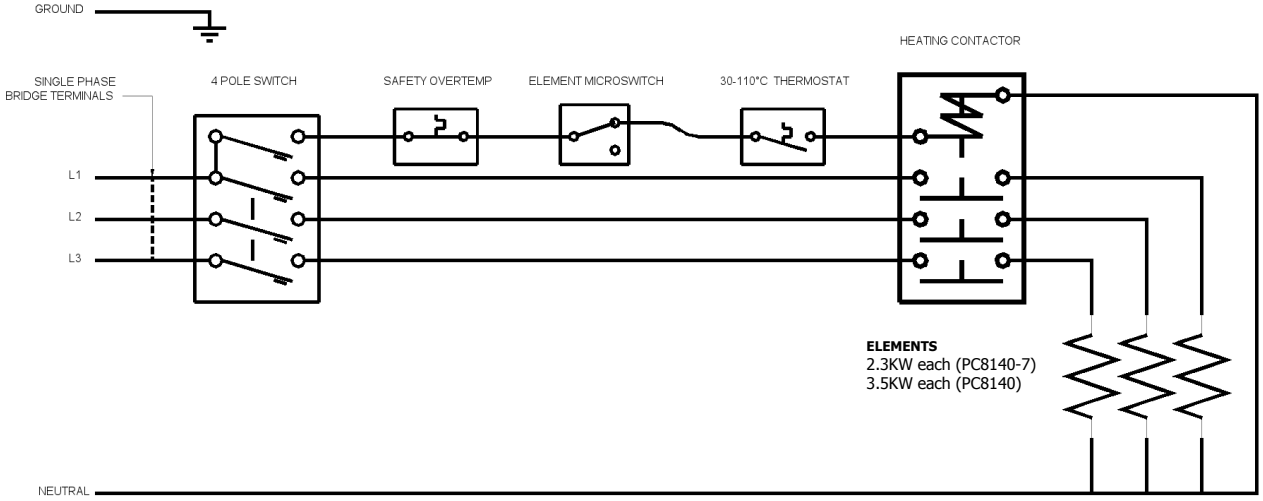

Electrical Supply Requirements

		Standard Ex-Factory Model	Convertible to:
PC8140E	10.5 kW	3P+N+E, L1=L2=L3 = 15A @ 240V	1P+N+E, 44A @ 240V
PC8140E-7	7.0 kW	1P+N+E, 30A @ 240V	3P+N+E, L1=L2=L3 = 10A @ 240V

Replacement Parts List

IMPORTANT:

Only genuine authorized replacement parts should be used for the servicing and repair of this appliance. The instructions supplied with the parts should be followed when replacing components.
For further information and servicing instructions, contact your nearest authorized service branch (contact details are as shown on the reverse of the front cover of this manual).

When ordering spare parts, please quote the part number and the description as listed below. If the part required is not listed below, request the part by description and quote model number and serial number which is shown on the rating plate.

Controls

231776	Element Assembly 10.5kW	(PC8140E).
232605	Element Assembly 7.0kW	(PC8140E-7).
232744	Element Retaining Pin.	
232750	Element 'O' Ring.	
232746	Bulkhead 'O' Ring.	
232740	Overtemp Thermostat (Reset Switch).	
232741	Thermostat.	
015561	Thermostat Knob.	
235403	Water Valve.	
232733	Control Panel.	
227962	Neon Green.	
227963	Neon Orange.	
232736	Element Control Switch.	
227401	Element Control Knob.	
232775	Terminal Block.	
231738	Contactor.	
232748	Microswitch.	

General

229836	Pasta Cooker Basket	165 x 165mm.
229682	Basket Support Frame.	
227856	Door Magnet.	
229804	Water Filler Spout.	
019390	Water Drain Valve.	
229823	Overflow Hose.	
229822	Drain 'Y' Junction.	
228933	Basin Connector.	
227850	Adjustable Leg - 150mm.	

Accessories (Optional)

228793	Plinth Kit.	
229837	Pasta Cooker Basket	320 x 165mm.