OPERATOR'S MANUAL

Model 428
Shake/Slush Freezer

Original Operating Instructions

055058-M

February, 2001 (Original Publication)
(Updated 9/15/14)

Complete this page for quick reference when service is required:

Taylor Distributor:_____

Address:_____

Phone:_____

Service:_____

Parts:_____

Date of Installation:_____

Information found on the data label:

Model Number:_____

Serial Number:_____

Electrical Specs: Voltage_____Cycle_____

Phase_____

Maximum Fuse Size:_____A

Minimum Wire Ampacity:_____A

© 2001 Carrier Commercial Refrigeration, Inc.
055058- M
Any unauthorized reproduction, disclosure, or distribution of copies by any person of any portion of this work may be a violation of Copyright Law of the United States of America and other countries, could result in the awarding of Statutory Damages of up to $250,000 (17 USC 504) for infringement, and may result in further civil and criminal penalties.
All rights reserved.

Taylor Company
a division of Carrier Commercial Refrigeration, Inc.
750 N. Blackhawk Blvd.
Rockton, IL 61072

Table of Contents

Section 1 To the Installer 1

Section 2 To the Operator 4

Section 3 Safety 5

Section 4 Operator Parts Identification 7

Model 428 7

Beater Door Assembly With Standard Door (No Prime Plug) 8

Beater Door Assembly With Self- Closing/Prime Plug Door 10

Section 5 Important: To the Operator 13

Section 6 Operating Procedures 15

Assembly 15

Sanitizing 22

Priming the Freezing Cylinder 23

Closing Procedure 24

Draining Product From The Freezing Cylinder 24

Rinsing 25

Cleaning 25

Disassembly 26

Brush Cleaning 26

Section 7 Important: Operator Checklist 27

During Cleaning and Sanitizing: 27

Troubleshooting Bacterial Count: 27

Regular Maintenance Checks: 27

Winter Storage 28

Section 8 Troubleshooting Guide 29

Section 9 Parts Replacement Schedule 31

Section 10 Limited Warranty on Equipment 32

Section 11 Limited Warranty on Parts 34

Wiring Diagrams 37

Note: Continuing research results in steady improvements; therefore, information in this manual is subject to change without notice.

Note: Only instructions originating from the factory or its authorized translation representative(s) are considered to be the original set of instructions.

© 2001 Carrier Commercial Refrigeration, Inc. (Original Publication)
(Updated September, 2014)
055058- M
Any unauthorized reproduction, disclosure, or distribution of copies by any person of any portion of this work may be a violation of Copyright Law of the United States of America and other countries, could result in the awarding of Statutory Damages of up to $250,000 (17 USC 504) for infringement, and may result in further civil and criminal penalties.
All rights reserved.

Taylor Company
a division of Carrier Commercial Refrigeration, Inc.
750 N. Blackhawk Blvd.
Rockton, IL 61072

Section 1 To the Installer

The following information has been included in the manual as safety and regulatory guidelines. For complete installation instructions, please see the Installation Checklist.

Installer Safety

In all areas of the world, equipment should be installed in accordance with existing local codes. Please contact your local authorities if you have any questions.

Care should be taken to ensure that all basic safety practices are followed during the installation and servicing activities related to the installation and service of Taylor equipment.

- Only authorized Taylor service personnel should perform installation and repairs on the equipment.
- Authorized service personnel should consult OSHA Standard 29CFRI910.147 or the applicable code of the local area for the industry standards on lockout/tagout procedures before beginning any installation or repairs.
- Authorized service personnel must ensure that the proper PPE is available and worn when required during installation and service.
- Authorized service personnel must remove all metal jewelry, rings, and watches before working on electrical equipment.

The main power supply(s) to the freezer must be disconnected prior to performing any repairs. Failure to follow this instruction may result in personal injury or death from electrical shock or hazardous moving parts as well as poor performance or damage to the equipment.

Note: All repairs must be performed by an authorized Taylor Service Technician.

This unit has many sharp edges that can cause severe injuries.

Site Preparation

Review the area where the unit will be installed before uncrating the unit. Make sure that all possible hazards to the user and the equipment have been addressed.

Air Cooled Units

Air cooled units require a minimum of 3” (76 mm) of clearance on both sides of the freezer. It is recommended to place the rear of the unit against the wall to prevent the recirculation of warm air. Minimum air clearances must be met to assure adequate air flow for optimum performance. Failure to allow adequate clearance can reduce the refrigeration capacity of the freezer and possibly cause permanent damage to the compressor.

For Indoor Use Only: This unit is designed to operate indoors, under normal ambient temperatures of 70°-75°F (21°-24°C). The freezer has successfully performed in high ambient temperatures of 104°(40°C) at reduced capacities.

This unit must **NOT** be installed in an area where a water jet or hose can be used. **NEVER** use a water jet or hose to rinse or clean the unit. Failure to follow this instruction may result in electrocution.

This unit must be installed on a level surface to avoid the hazard of tipping. Extreme care should be taken in moving this equipment for any reason. Two or more persons are required to safely move this unit. Failure to comply may result in personal injury or equipment damage.

Uncrate the unit and inspect it for damage. Report any damage to your Taylor Distributor.

This piece of equipment is made in the USA and has USA sizes of hardware. All metric conversions are approximate and vary in size.

Electrical Connections

This equipment is supplied with a 3-wire cord and grounding type plug, for connection to a single phase, 60 cycle, branch circuit supply. This unit must be plugged into a properly grounded receptacle. The cord and plug provided are 20 A for 115/60/1, or 15 A for 208-230/60/1; therefore, the wall outlet must also be 20 A for 115/60/1 or 15 A for 208-230/60/1. Check the data label, located on the side panel for electrical specifications.

Note: The following procedures should be performed by a trained service technician.

Permanent wiring may be employed, if required by local codes. Instructions for conversion to permanent wiring are as follows:

1. Be sure the freezer is electrically disconnected.
2. Remove the appropriate panel and locate the small electrical box at the base of the freezer.
3. Remove the factory installed cord and strain relief bushing.
4. Route incoming permanent wiring through 7/8" (22 mm) hole in base pan.
5. Connect two power supply leads. Attach ground (earth) wire to the grounding lug inside the electrical box.
6. Be sure unit is properly grounded before applying power.

In the United States, this equipment is intended to be installed in accordance with the National Electrical Code (NEC), ANSI/NFPA 70-1987. The purpose of the NEC code is the practical safeguarding of persons and property from hazards arising from the use of electricity. This code contains provisions considered necessary for safety. In all other areas of the world, equipment should be installed in accordance with the existing local codes. Please contact your local authorities.

FOLLOW YOUR LOCAL ELECTRICAL CODES!

Each unit requires one power supply for each data label on the unit. Check the data label on the freezer for branch circuit overcurrent protection or fuse, circuit ampacity and other electrical specifications. Refer to the wiring diagram provided inside of the electrical box, for proper power connections.

CAUTION: THIS EQUIPMENT MUST BE PROPERLY GROUNDED! FAILURE TO DO SO CAN RESULT IN SEVERE PERSONAL INJURY FROM ELECTRICAL SHOCK!

DO NOT operate this freezer with larger fuses than specified on the unit data label. Failure to follow this instruction may result in electrocution or damage to the machine.

This unit is provided with an equipotential grounding lug that is to be properly attached to the rear of the frame by the authorized installer. The installation location is marked by the equipotential bonding symbol (5021 of IEC 60417-1) on both the removable panel and the equipment's frame.

Stationary appliances which are not equipped with a power cord and a plug or another device to disconnect the appliance from the power source must have an all-pole disconnecting device with a contact gap of at least 3 mm installed in the external installation.

Appliances that are permanently connected to fixed wiring and for which leakage currents may exceed 10 mA, particularly when disconnected or not used for long periods, or during initial installation, shall have protective devices such as a GFI, to protect against the leakage of current, installed by the authorized personnel to the local codes.

Supply cords used with this unit shall be oil-resistant, sheathed flexible cable not lighter than ordinary polychloroprene or other equivalent synthetic elastomer-sheathed cord (Code designation 60245 IEC 57) installed with the proper cord anchorage to relieve conductors from strain, including twisting, at the terminals and protect the insulation of the conductors from abrasion.

If the supply cord is damaged, it must be replaced by the manufacturer, its service agent, or similarly qualified person, in order to avoid a hazard.

Beater Rotation

Beater rotation must be clockwise as viewed looking into the freezing cylinder.

Note: The following procedures should be performed by a trained service technician.

To correct rotation on a single-phase unit, change the leads inside the beater motor. (Follow the diagram printed on motor.)

Refrigerant

In consideration of our environment, Taylor proudly uses only earth friendly HFC refrigerants. The HFC refrigerant used in this unit is R404A. This refrigerant is generally considered non-toxic and non-flammable, with an Ozone Depleting Potential (ODP) of zero (0).

However, any gas under pressure is potentially hazardous and must be handled with caution.

NEVER fill any refrigerant cylinder completely with liquid. Filling the cylinder to approximately 80% will allow for normal expansion.

Use only R404A refrigerant that conforms to the AHRI standard 700 specification. The use of any other refrigerant may expose users and operators to unexpected safety hazards.

Refrigerant liquid sprayed onto the skin may cause serious damage to tissue. Keep eyes and skin protected. If refrigerant burns should occur, flush immediately with cold water. If burns are severe, apply ice packs and contact a physician immediately.

Taylor reminds technicians to be cautious of government laws regarding refrigerant recovery, recycling, and reclaiming systems. If you have any questions regarding these laws, please contact the factory Service Department.

WARNING: R404A refrigerant used in conjunction with polyolester oils is extremely moisture absorbent. When opening a refrigeration system, the maximum time the system is open must not exceed 15 minutes. Cap all open tubing to prevent humid air or water from being absorbed by the oil.

Section 2 To the Operator

The freezer you have purchased has been carefully engineered and manufactured to give you dependable operation. The Taylor Model 428, when properly operated and cared for, will produce a consistent quality product. Like all mechanical products, they will require cleaning and maintenance. A minimum amount of care and attention is necessary if the operating procedures outlined in this manual are followed closely.

This Operator's Manual should be read before operating or performing any maintenance on your equipment.

Your Taylor freezer will NOT eventually compensate for and correct any errors during the set-up or filling operations. Thus, the initial assembly and priming procedures are of extreme importance. It is strongly recommended that personnel responsible for the equipment's operation, both assembly and disassembly, sit down together and go through these procedures in order to be properly trained and to make sure that no misunderstandings exist.

In the event you should require technical assistance, please contact your local authorized Taylor Distributor.

Note: Your Taylor warranty is valid only if the parts are authorized Taylor parts, purchased from the local authorized Taylor Distributor, and only if all required service work is provided by an authorized Taylor service technician. Taylor reserves the right to deny warranty claims on units or parts if non-Taylor approved parts or incorrect refrigerant were installed in the unit, system modifications were performed beyond factory recommendations, or it is determined that the failure was caused by abuse, misuse, neglect, or failure to follow all operating instructions. For full details of your Taylor Warranty, please see the Limited Warranty section in this manual.

Note: Constant research results in steady improvements; therefore, information in this manual is subject to change without notice.

If the crossed out wheeled bin symbol is affixed to this product, it signifies that this product is compliant with the EU Directive as well as other similar legislation in effect after August 13, 2005. Therefore, it must be collected separately after its use is completed, and cannot be disposed as unsorted municipal waste.

The user is responsible for returning the product to the appropriate collection facility, as specified by your local code.

For additional information regarding applicable local laws, please contact the municipal facility and/or local distributor.

Compressor Warranty Disclaimer

The refrigeration compressor(s) on this unit are warranted for the term stated in the Limited Warranty section in this manual. However, due to the Montreal Protocol and the U.S. Clean Air Act Amendments of 1990, many new refrigerants are being tested and developed, thus seeking their way into the service industry. Some of these new refrigerants are being advertised as drop-in replacements for numerous applications. It should be noted that in the event of ordinary service to this unit's refrigeration system, **only the refrigerant specified on the affixed data label should be used**. The unauthorized use of alternate refrigerants will void your Taylor compressor warranty. It is the unit owner's responsibility to make this fact known to any technician he employs.

It should also be noted that Taylor does not warrant the refrigerant used in its equipment. For example, if the refrigerant is lost during the course of ordinary service to this machine, Taylor has no obligation to either supply or provide its replacement either at billable or unbillable terms. Taylor does have the obligation to recommend a suitable replacement if the original refrigerant is banned, obsoleted, or no longer available during the five year warranty of the compressor.

Taylor will continue to monitor the industry and test new alternates as they are being developed. Should a new alternate prove, through our testing, that it would be accepted as a drop-in replacement, then the above disclaimer would become null and void. To find out the current status of an alternate refrigerant as it relates to your compressor warranty, call the local Taylor Distributor or the Taylor Factory. Be prepared to provide the Model/Serial Number of the unit in question.

Section 3 Safety

We, at Taylor Company, are concerned about the safety of the operator when he or she comes in contact with the freezer and its parts. Taylor has gone to extreme efforts to design and manufacture built- in safety features to protect both you and the service technician. As an example, warning labels have been attached to the freezer to further point out safety precautions to the operator.

IMPORTANT - Failure to adhere to the following safety precautions may result in severe personal injury or death. Failure to comply with these warnings may damage the machine and its components. Component damage will result in part replacement expense and service repair expense.

DO NOT operate the freezer without reading this Operator Manual. Failure to follow this instruction may result in equipment damage, poor freezer performance, health hazards, or personal injury.

This appliance is to be used only by trained personnel. It is not intended for use by children or people with reduced physical, sensory, or mental capabilities, or lack of experience and knowledge, unless given supervision or instruction concerning the use of the appliance by a person responsible for their safety. Children should be supervised to ensure that they do not play with the appliance.

This unit is provided with an equipotential grounding lug that is to be properly attached to the rear of the frame by the authorized installer. The installation location is marked by the equipotential bonding symbol (5021 of IEC 60417-1) on both the removable panel and the equipment's frame.

DO NOT use a water jet to clean or rinse the freezer. Failure to follow these instructions may result in serious electrical shock.

- **DO NOT** operate the freezer unless it is properly grounded.
- **DO NOT** operate freezer with larger fuses than specified on freezer data label.
- All repairs must be performed by an authorized Taylor service technician.
- The main power supplies to machine must be disconnected prior to performing repairs.
- For Cord Connected Units: Only Taylor authorized service technicians or licensed electricians may install a plug or replacement cord on these units.
- Stationary appliances which are not equipped with a power cord and a plug or another device to disconnect the appliance from the power source must have an all-pole disconnecting device with a contact gap of at least 3 mm installed in the external installation.
- Appliances that are permanently connected to fixed wiring and for which leakage currents may exceed 10 mA, particularly when disconnected or not used for long periods, or during initial installation, shall have protective devices such as a GFI, to protect against the leakage of current, installed by the authorized personnel to the local codes.
- Supply cords used with this unit shall be oil-resistant, sheathed flexible cable not lighter than ordinary polychloroprene or other equivalent synthetic elastomer-sheathed cord (Code designation 60245 IEC 57) installed with the proper cord anchorage to relieve conductors from strain, including twisting, at the terminals and protect the insulation of the conductors from abrasion.

  If the supply cord is damaged, it must be replaced by the manufacturer, its service agent, or similarly qualified person, in order to avoid a hazard.

Failure to follow these instructions may result in electrocution. Contact your local authorized Taylor Distributor for service.

130415

- **DO NOT** allow untrained personnel to operate this machine.
- **DO NOT** operate the freezer unless all service panels and access doors are restrained with screws.
- **DO NOT** remove any internal operating parts (examples: freezer door, beater, scraper blades, etc.) unless all control switches are in the OFF position.

Failure to follow these instructions may result in severe personal injury to fingers or hands from hazardous moving parts.

This unit has many sharp edges that can cause severe injuries.

- **DO NOT** put objects or fingers in the door spout. This may contaminate the product and cause severe personal injury from blade contact.
- **USE EXTREME CAUTION** when removing the beater asssembly. The scraper blades are very sharp.

Access to the service area of the unit is restricted to persons having knowledge and practical experience with the appliance, in particular as far as safety and hygiene are concerned.

This freezer must be placed on a level surface. Failure to comply may result in personal injury or equipment damage.

Cleaning and sanitizing schedules are governed by your state or local regulatory agencies and must be followed accordingly. Please refer to the cleaning section of this manual for the proper procedure to clean this unit.

This machine is designed to maintain product temperature under 41°F (5°C). Any product being added to this machine must be below 41°F (5°C). Failure to follow this instruction may result in health hazards and poor freezer performance.

IMPORTANT: DO NOT obstruct air intake and discharge openings: 3” (76 mm) minimum air clearance on both sides of the freezer. It is recommended to place the rear of the unit against the wall to prevent the recirculation of warm air. Failure to follow this instruction may cause poor freezer performance and damage to the machine.

For Indoor Use Only: This unit is designed to operate indoors, under normal ambient temperatures of 70° - 75°F (21° - 24°C). The freezer has successfully performed in high ambient temperatures of 104°(40°C) at reduced capacities.

DO NOT run the machine without product. Failure to follow this instruction can result in damage to the machine.

NOISE LEVEL: Airborne noise emission does not exceed 78 dB(A) when measured at a distance of 1.0 meter from the surface of the machine and at a height of 1.6 meters from the floor.

Section 4 Operator Parts Identification

Model 428

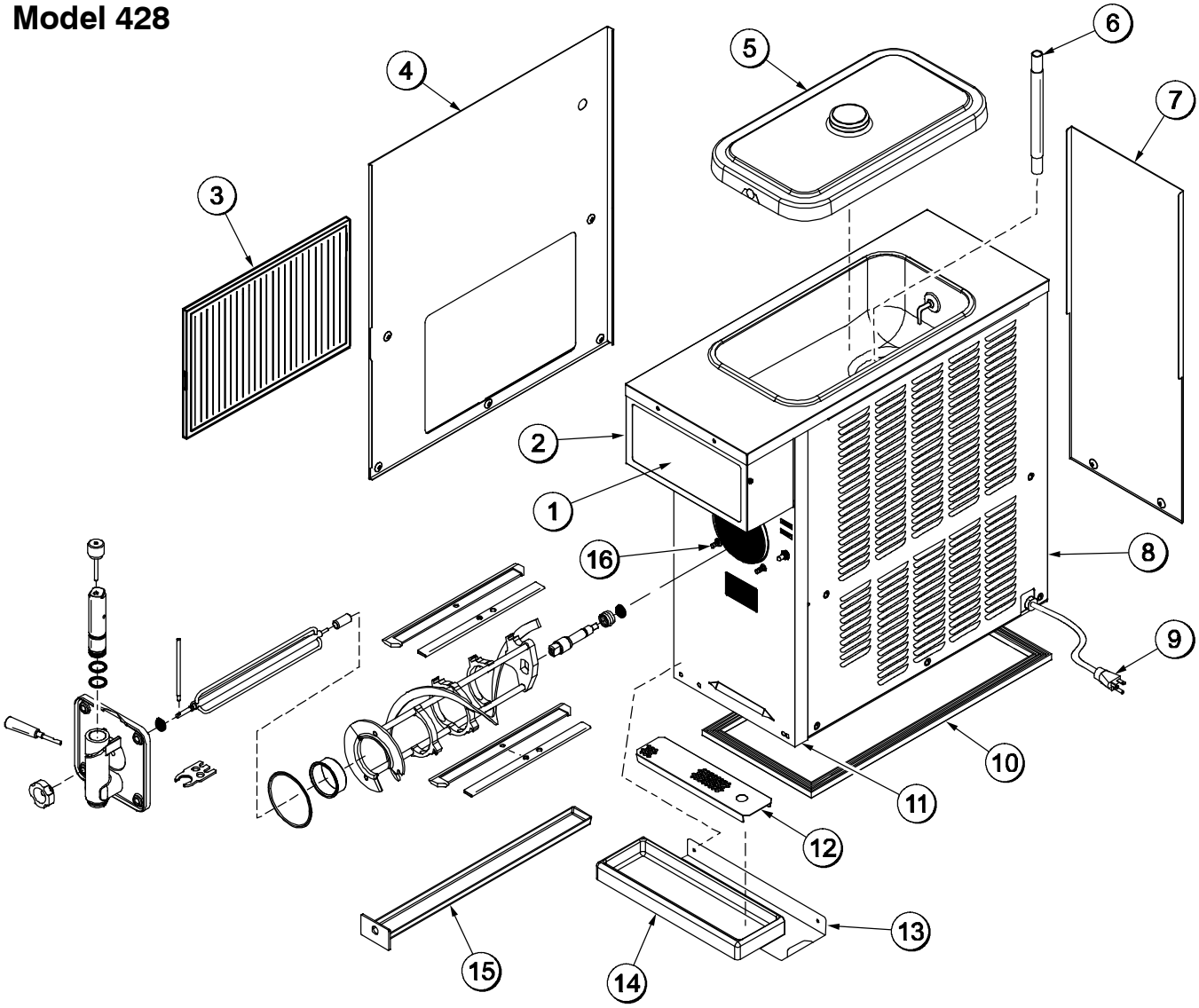

Figure 1

ITEM	DESCRIPTION	PART NO.
1	LENS-LIGHT	052952
2	PLATE A.-DEC LIGHTED	X52936
3	FILTER-AIR-17 X 13 X 7/16	052951
4	PANEL A.-SIDE*LEFT	X62592
5	COVER A.-HOPPER	X51152
6	TUBE-FEED 5/16 HOLE SS	028967-7
7	PANEL-REAR	062594
8	PANEL-SIDE*RIGHT	052935

ITEM	DESCRIPTION	PART NO.
9	CORD-POWER-125V	045666
10	GASKET-BASE·PAN	062619
11	PANEL-FRONT	054933
12	SHIELD-SPLASH	052980
13	SHELF-DRIP·TRAY	052979
14	TRAY-DRIP	052978
15	PAN-DRIP 22-29/32 LONG	053048
16	STUD-NOSE·CONE-5/16-18	013496

NOTE: STANDARD DOOR SHOWN (NO PRIME PLUG)

101101

Beater Door Assembly With Standard Door (No Prime Plug)

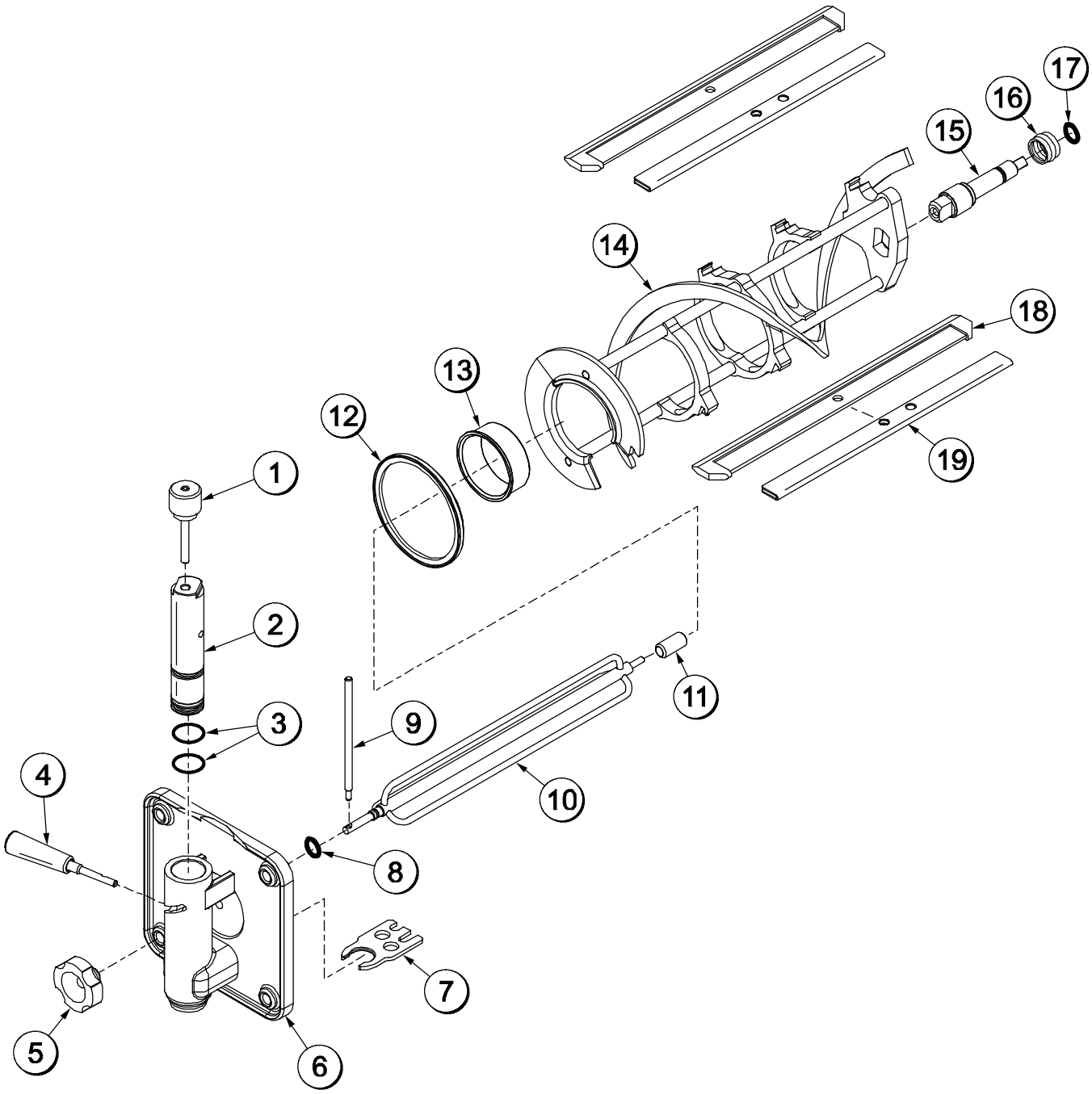

Figure 2

Beater Door Assembly With Standard Door (No Prime Plug)

ITEM	DESCRIPTION	PART NO.
1	PIN A.-VALVE HANDLE	X25929
2	VALVE-DRAW SLUSH	047734
3	O-RING-1”OD X .139W	032504
4	HANDLE A.-DRAW-SLUSH-BLK	X47384
5	NUT-STUD	029880
6	DOOR A.-PARTIAL	X39248-SER
7	BUSTER-ICE	047735
8	O-RING-.291 ID X .080W	018550
9	ARM-TORQUE	052450
10	TORQUE A.	X14488

ITEM	DESCRIPTION	PART NO.
11	BEARING-GUIDE	014496
12	GASKET-DOOR 5.109”ID	014030
13	BEARING-FRONT	013116
14	BEATER A.-7QT-1 PIN	X46233
15	SHAFT-BEATER	035418
16	SEAL-DRIVE SHAFT	032560
17	O-RING-7/8 OD X .139W	025307
18	BLADE-SCRAPER-PLASTIC	046237
19	CLIP-SCRAPER·BLADE 8.75”	046238

*NOTE: OPTIONAL TORQUE A. = X27027-1

Beater Door Assembly With Self- Closing/Prime Plug Door

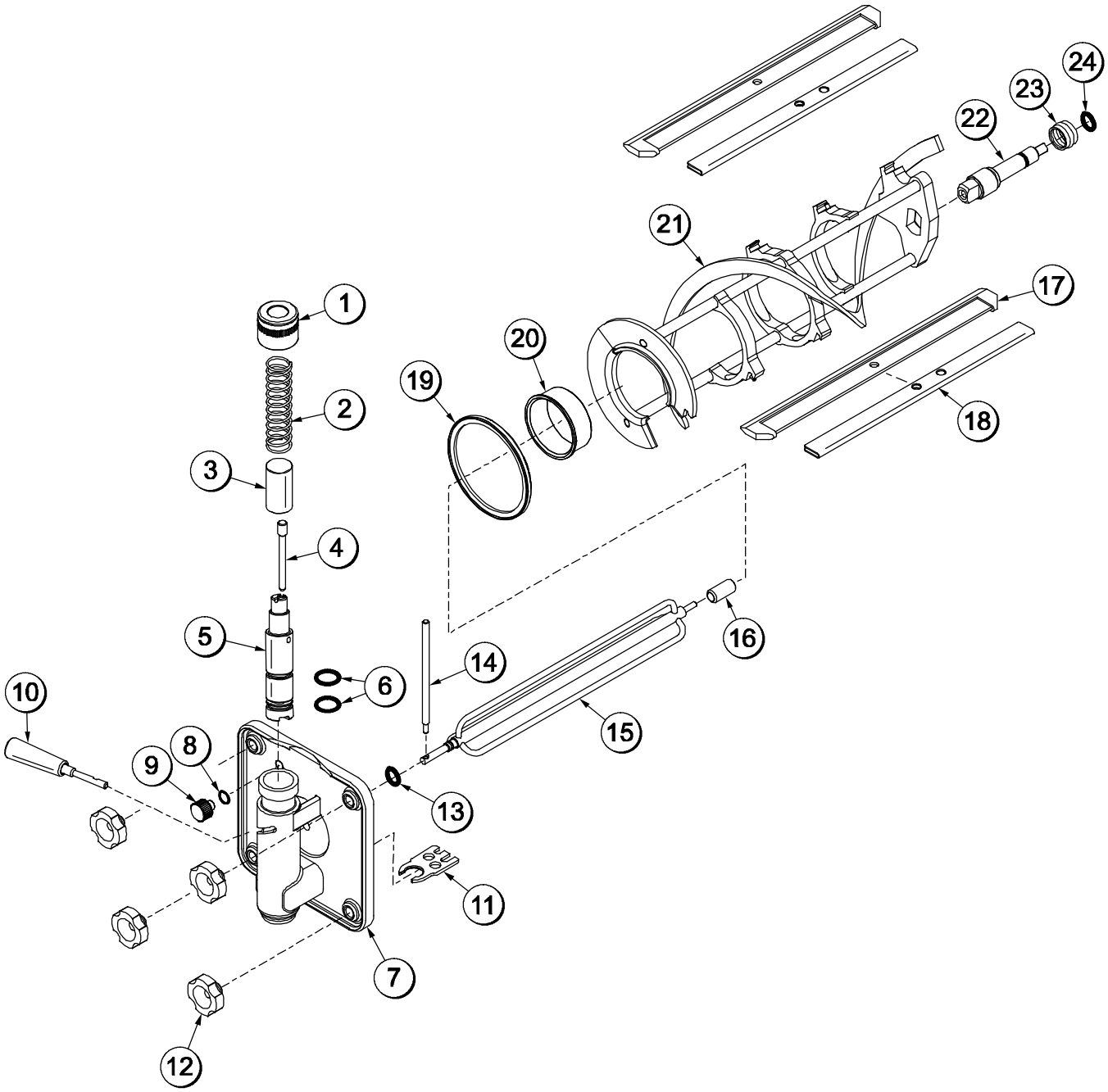

Figure 3

Beater Door Assembly With Self- Closing/Prime Plug Door

ITEM	DESCRIPTION	PART NO.
1	CAP A.- SPRING- RETAINER	X54755
2	SPRING- COMP.970X.082X3.875	030344
3	PLUNGER- CAP DRAW SWITCH	080554
4	PIN- HANDLE- VALVE	064864
5	VALVE- DRAW- SLUSH	080662
6	O- RING - 1” OD X .139 W	032504
7	DOOR A.- PARTIAL SELF CLOSE	X80663
8	O- RING- .563 OD X .070W- #013	043758
9	PLUG- PRIME	050405
10	HANDLE A. DRAW	X47384
11	BUSTER- ICE	047735
12	NUT- STUD	029880

ITEM	DESCRIPTION	PART NO.
13	O- RING - .291 OD X .080 W	018550
14	ARM - TORQUE	052450
15	TORQUE A.	X14488
16	BEARING - GUIDE	014496
17	BLADE - SCRAPER PLASTIC	046237
18	CLIP - SCRAPER BLADE	046238
19	GASKET - DOOR 5.109” ID	014030
20	BEARING - FRONT	013116
21	BEATER A. - 7 QT. 1 PIN	X46233
22	SHAFT - BEATER	035418
23	SEAL - DRIVE SHAFT	032560
24	O- RING 7/8 OD X .139 W	025307

Accessories

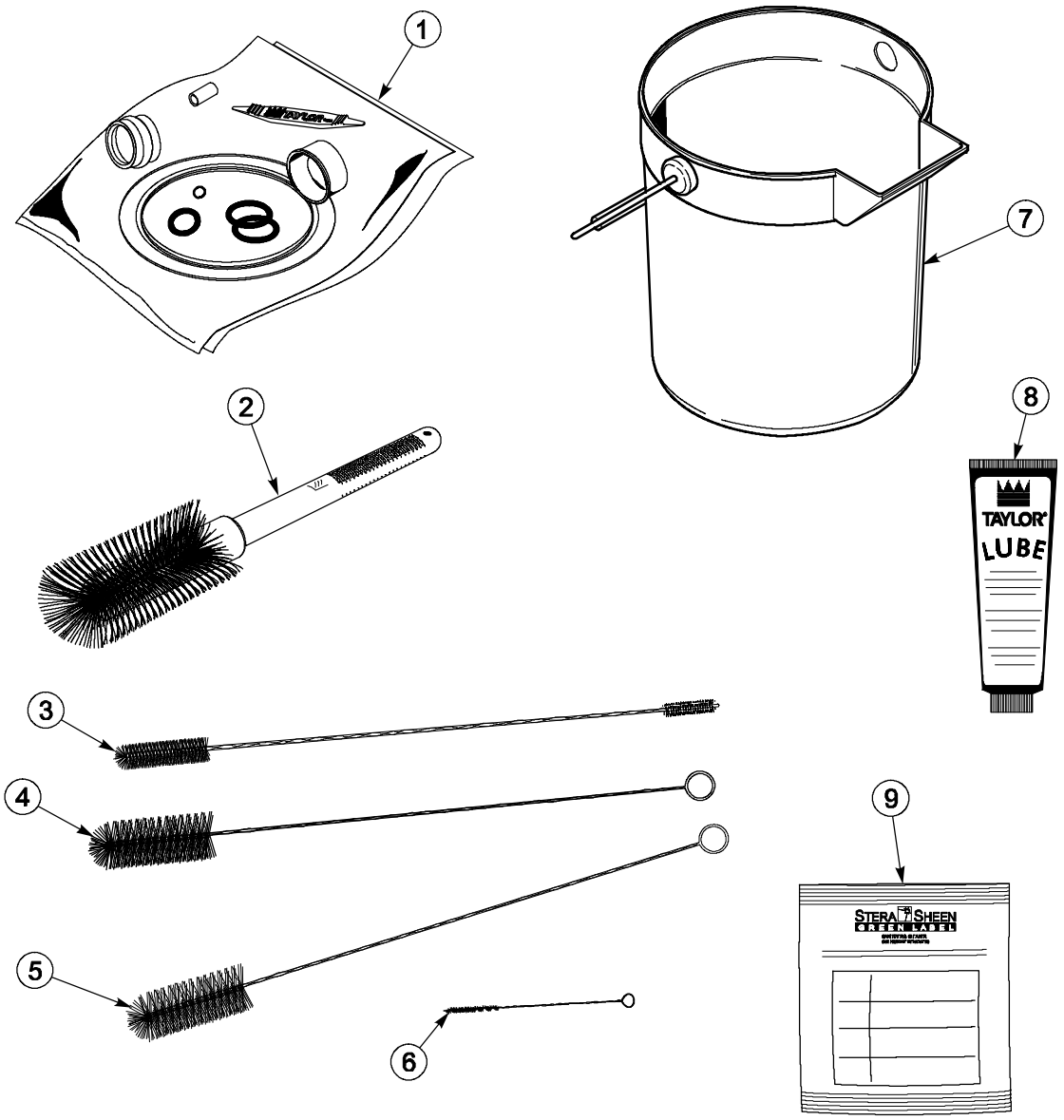

Figure 4

ITEM	DESCRIPTION	PART NO.
1	KIT A.-TUNE UP	X50413
2	BRUSH-MIX PUMP BODY-3”X7”	023316
3	BRUSH-DOUBLE ENDED	013072
4	BRUSH-REAR BRG 1IN.DX2IN	013071
5	BRUSH-DRAW VALVE 1X2X17	013073

ITEM	DESCRIPTION	PART NO.
6	BRUSH- SYRUP PORT	045079
7	PAIL-10 QT.	013163
8	LUBRICANT-TAYLOR 4 OZ.	047518
*9	SANITIZER- STERA SHEEN	SEE NOTE

***NOTE:** A sample container of sanitizer is sent with the unit. For reorders, order Stera Sheen part no. 055492 (100 2 oz. packs) or Kay- 5 part no. 041082 (200 packs).

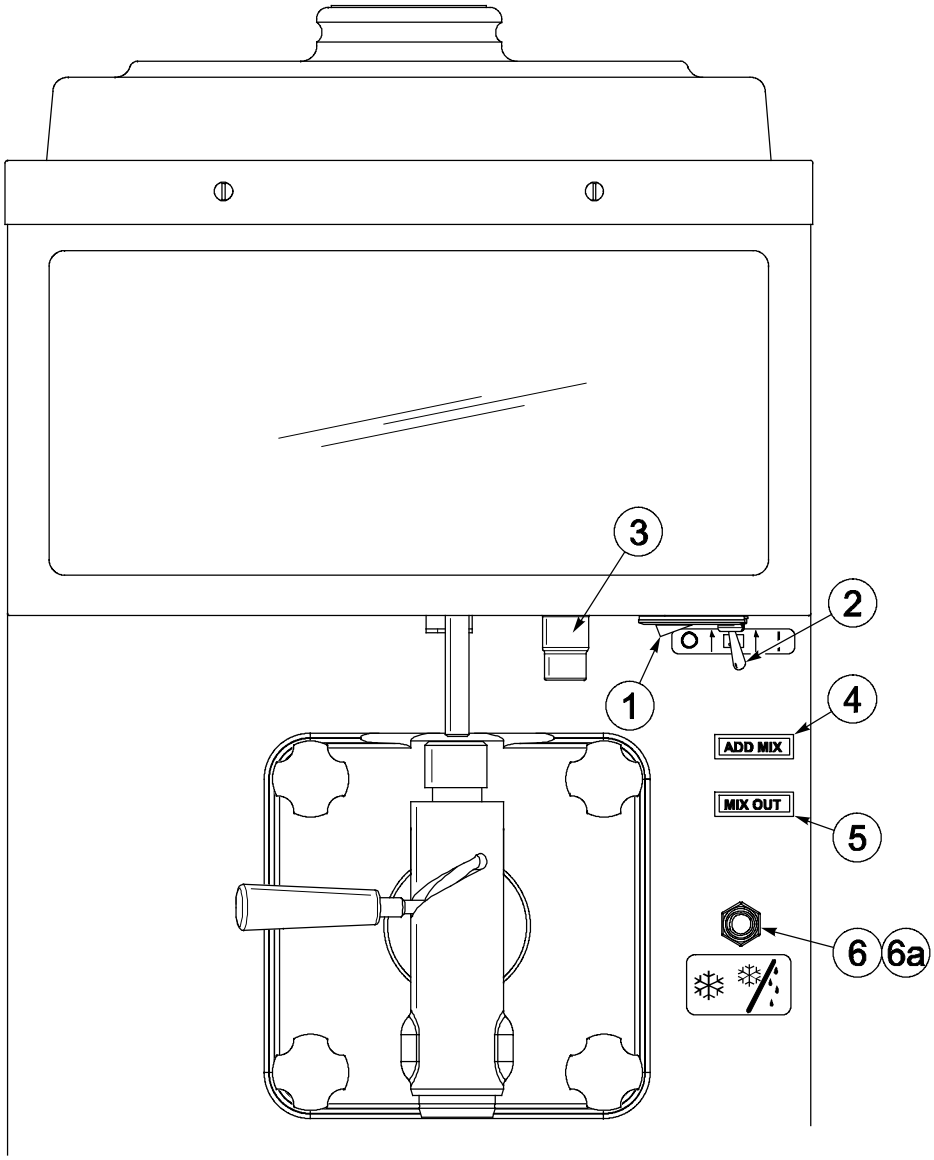

Figure 5

ITEM	DESCRIPTION	PART NO.
1	SWITCH- ROCKER AUTO/ WASH (POWER SWITCH)	048420
2	SWITCH- TOGGLE- SPST 3/4 HP/250V (DISPLAY LIGHT)	012626
3	BUSHING A.- TORQUE (VISCOSITY ADJUSTMENT)	X50399- SER
4	LIGHT- AMBER- RECT- 12VDC ADD MIX	052486- 02

ITEM	DESCRIPTION	PART NO.
5	LIGHT- AMBER- RECT- 12VDC MIX OUT	052487- 02
6	SWITCH- TOGGLE- SPST 3/4 HP/250V (STANDBY SWITCH)	012626
6a	BOOT- SWITCH- TOGGLE	043398

NOTE: STANDARD DOOR SHOWN (NO PRIME PLUG)

081002

Power Switch

The center position is OFF. The right position is AUTO, which activates the beater motor and the refrigeration system. The left position is WASH, which activates the beater motor only.

Display Light Switch

The display light switch is located under the control channel. The left position is “OFF”. The right position is “ON”, and activates the display light.

Viscosity Adjustment

The viscosity (thickness) of the product can be adjusted by turning the viscosity adjustment screw on the right side of the unit, under the display light. Turn the viscosity adjustment screw clockwise for a thicker product, or counterclockwise for a thinner product. After making an adjustment, allow the refrigeration system to cycle 2 or 3 times to accurately evaluate the viscosity.

Do not use metal objects to press the reset button. Failure to follow this instruction may result in electrocution.

Indicator Light - “ADD MIX”

A mix level indicating light is located on the front of the machine. The light flashes to indicate when the mix hopper has a low supply of product and should be refilled as soon as possible.

Indicator Light - “MIX OUT”

A mix out indicating light is located on the front of the machine. When the light is flashing, it indicates that the hopper is empty and the mix supply needs replenishing. To prevent damage to the unit, refrigeration discontinues automatically when the MIX OUT indicator light is flashing.

Standby Switch (Toggle Switch)

This switch determines which mode of operation the freezing cylinder is operating in. The left position places the unit in the AUTO mode. The right position places the unit in the STANDBY mode.

Note: The power switch must be in the AUTO position in order for the standby switch to function.

Reset Mechanism

Should an overload condition occur, the freezer will automatically shut down. To properly reset the freezer, place the toggle switch in the OFF position. Wait two or three minutes; then press the reset button located in the left side panel. Place the toggle switch in the WASH position and observe the freezer’s performance; return the toggle switch to the AUTO position.

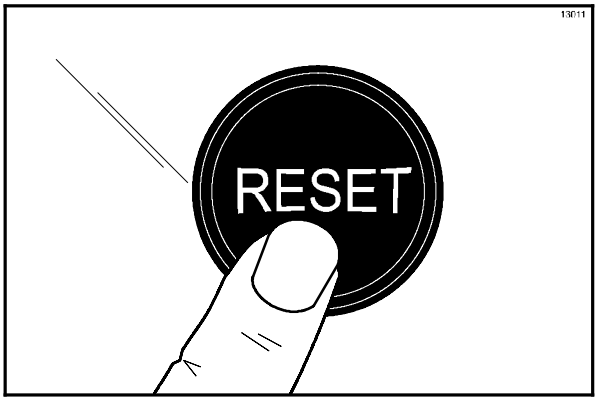

Figure 6

Section 6 Operating Procedures

The Model 428 freezer is designed to produce shake or slush product at the desired thickness. This unit has a 7 quart freezing cylinder.

We begin our instructions at the point where we enter the store in the morning and find the parts disassembled and laid out to air dry from the previous night's brush cleaning.

These opening procedures will show you how to assemble these parts into the freezer, sanitize them, and prime the freezer with fresh mix in preparation to serve your first portion.

If you are disassembling the machine for the first time or need information to get to this point in our instructions, turn to page 26, "Disassembly", and start there.

Assembly

Note: When lubricating parts, use an approved food grade lubricant (example: Taylor Lube).

Step 1
Slide the o- ring into the groove on the drive shaft. Lubricate the o-ring and shaft portion that comes in contact with the bearing. DO NOT lubricate the square end of the drive shaft.

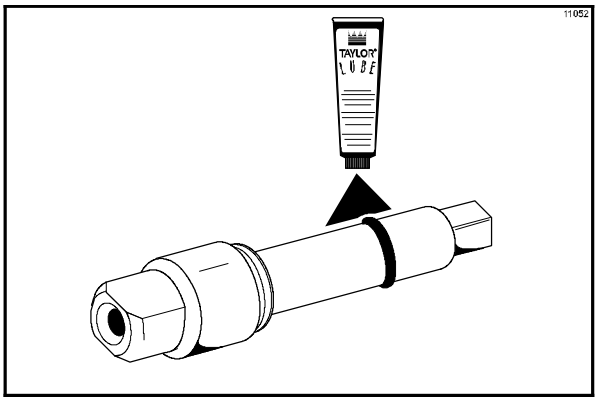

Figure 7

Note: To ensure that the mix does not leak out of the back of the freezing cylinder, the middle section of the boot seal should be convex or extend out from the seal. If the middle section of the boot seal is concave or extending into the middle of the seal, invert the seal.

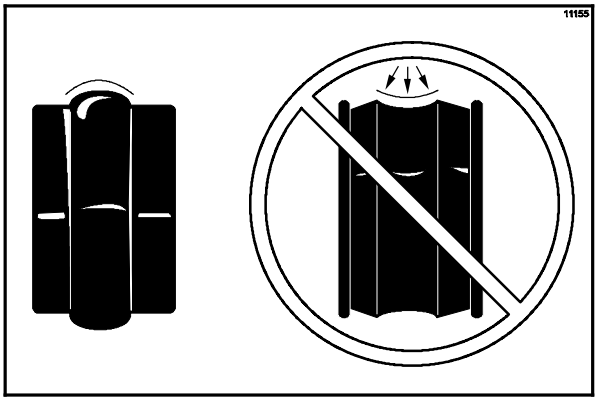

Figure 8

Step 2
Lubricate the boot seal groove and slide the boot seal over the shaft and groove until it snaps into place. Fill the inside portion of the seal with 1/4" more lubricant. Install the drive shaft.

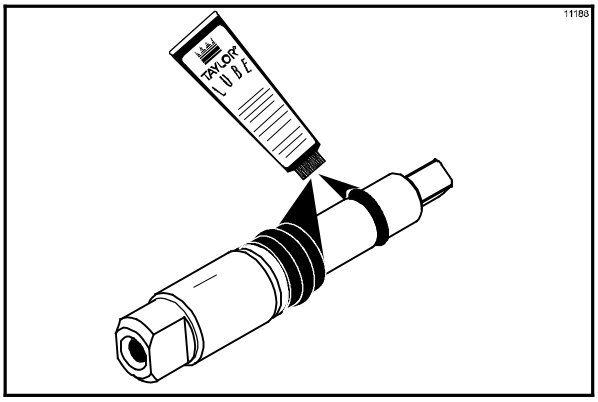

Figure 9

Step 3
Insert the drive shaft into the rear shell bearing and engage the square end firmly into the female socket of the drive unit. Be certain that the drive shaft fits into the drive coupling without binding.

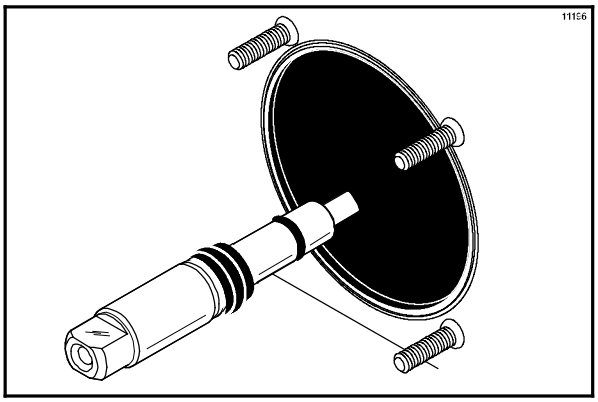

Figure 10

Step 4
Check scraper blades for any nicks or signs of wear. If any nicks are present or if the blade is worn, replace both blades.

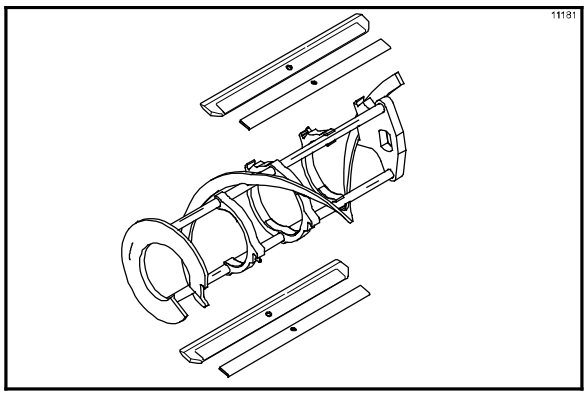

Figure 11

If blades are in good condition, install the scraper blade clip over the scraper blade. Place the rear scraper blade over the rear holding pin (knife edge to the outside). Holding the blade on the beater, turn it over and install the front blade the same way.

Step 5
Holding the blades in position, insert the beater assembly into the freezing cylinder, and slide the assembly into position over the drive shaft. Turn the beater slightly to be certain that the beater is properly seated.

When in position, the beater will not protrude beyond the front of the freezing cylinder.

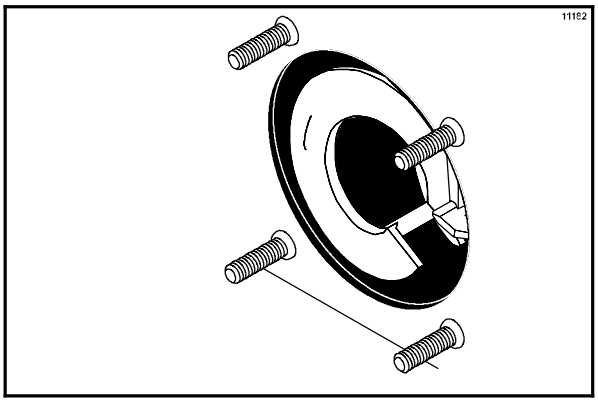

Figure 12

Step 6
Install the white plastic guide bearing on the short end of the torque rotor. Slide the o-ring into the groove on the long end of the torque rotor and lubricate the o-ring. Do not lubricate the guide bearing.

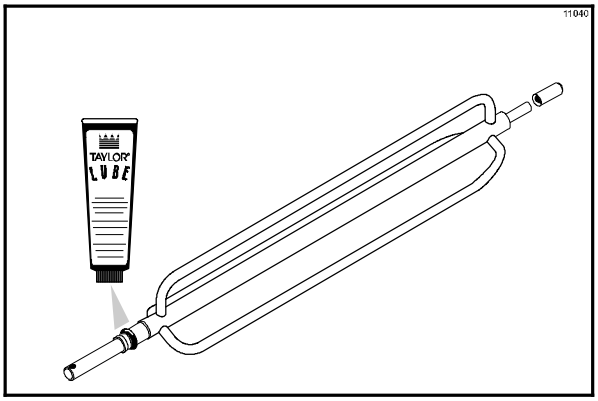

Figure 13

Step 7
Insert the torque rotor end with the guide bearing into the pilot hole in the center of the drive shaft. The hole in the torque rotor shaft should be rotated to the 12 o'clock position.

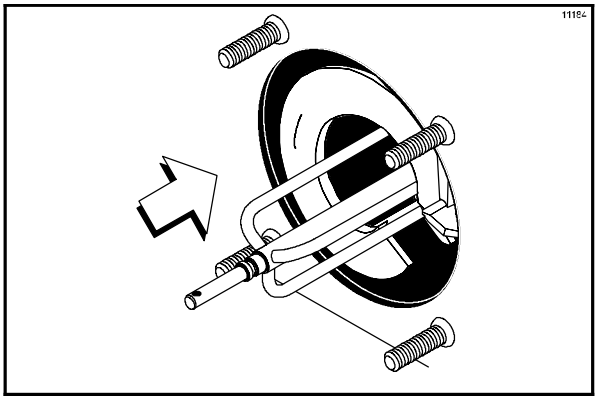

Figure 14

Freezer Door Assembly - Standard Door (No Prime Plug)

Note: The Model 428 comes equipped with two door options: a standard door without a prime plug or a self-closing door with a prime plug. Follow the appropriate assembly procedures for your style door. (For self- closing/prime plug door assembly instructions, go to page 18 and perform Steps A - L.)

Step 8
Install the o-rings on the draw valve and lubricate.

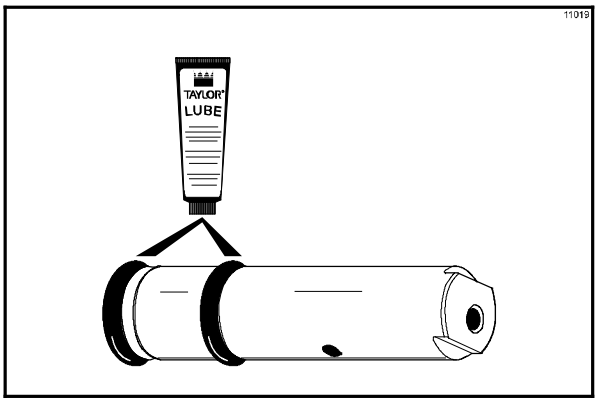

Figure 15

Step 9
Insert the draw valve into the door, leaving approximately 1/2" of the valve sticking out the top of the door.

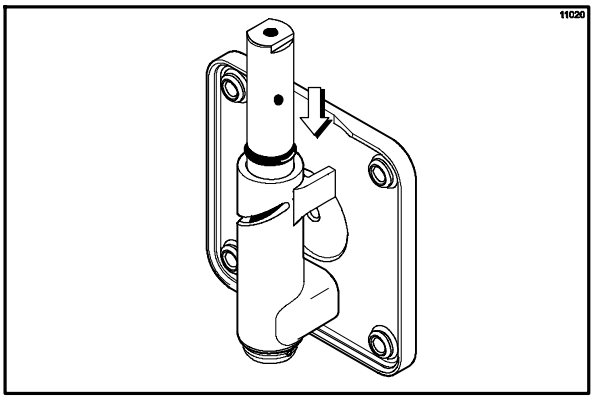

Figure 16

Step 10
Rotate the draw valve so the flats on the top of the draw valve are perpendicular to the door face.

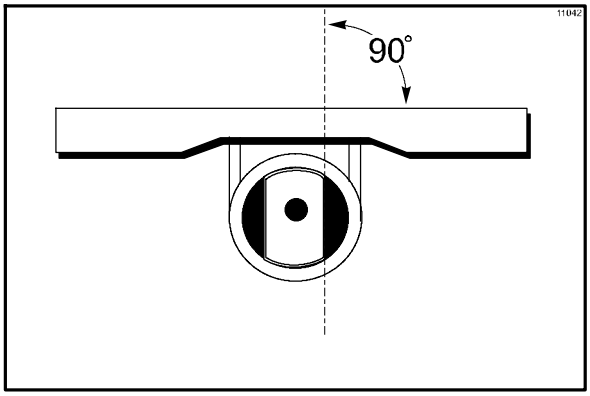

Figure 17

Step 11
Insert the ice buster through the door spout and into the slot located just above the lower o-ring.

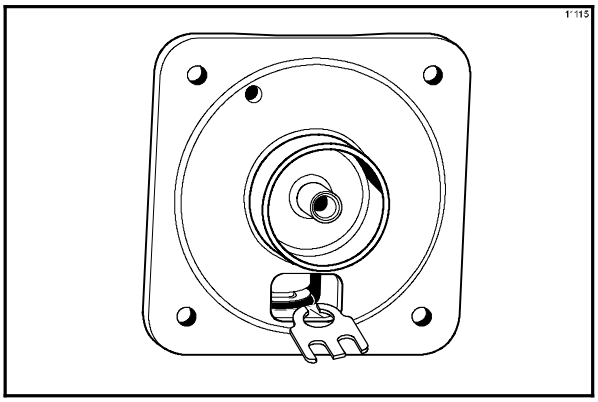

Figure 18

Step 12
With the ice buster in place, rotate the draw valve to allow installation of the draw handle. This will lock the ice buster in place. Install the draw handle pin, and close the draw valve by moving the handle to the left.

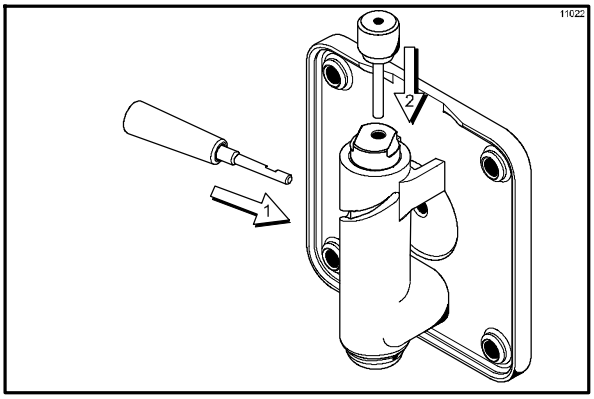

Figure 19

Step 13
Place the large rubber gasket into the groove on the back side of the freezer door. Slide the white, plastic front bearing onto the bearing hub, making certain that the flanged end of the bearing is resting against the freezer door. **DO NOT** lubricate the door gasket or front bearing.

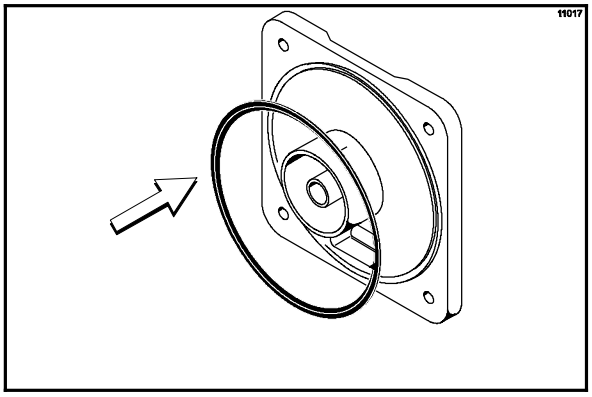

Figure 20

Step 14
Position the freezer door on the 4 studs on the front of the freezing cylinder. Install the handscrews. Tighten equally in a criss-cross pattern to insure the door is snug. **Do not over-tighten.**

Step 15
Position the torque arm by inserting it through the slot in the torque switch arm and down into the hole in the torque rotor which protrudes from the door. Verify proper installation by moving the torque rotor back and forth to be sure it moves freely and easily.

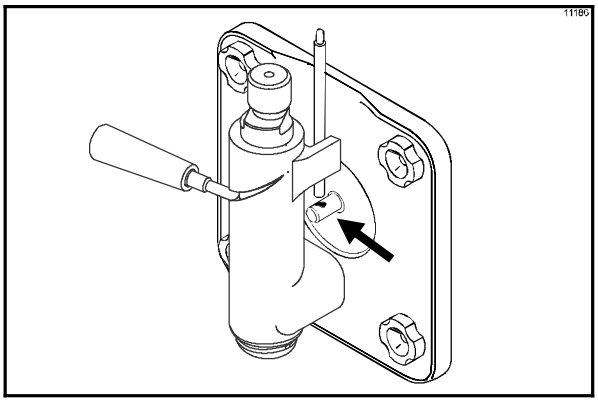

Figure 21

Proceed to Step 16 on page 21.

Freezer Door Assembly - Self-Closing/ Prime Plug Door

Note: The Model 428 comes equipped with two door options: a standard door without a prime plug or a self-closing door with a prime plug. Follow the appropriate assembly procedures for your style door. (For standard door ([no prime plug] assembly instructions, go to page 17 and perform Steps 8 - 15).

Step A - Self-Closing Door Assembly
Install the o-rings on the draw valve and lubricate.

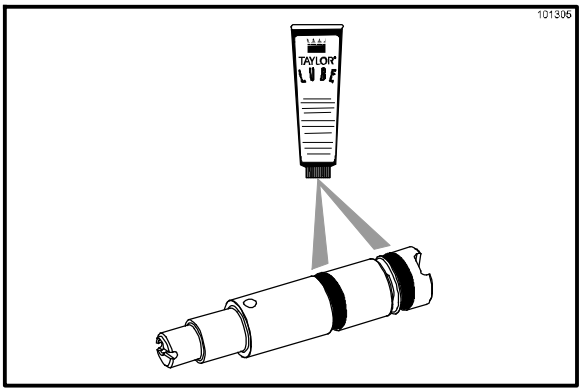

Figure 22

Step B - Self- Closing Door Assembly
Insert the draw valve into the door.

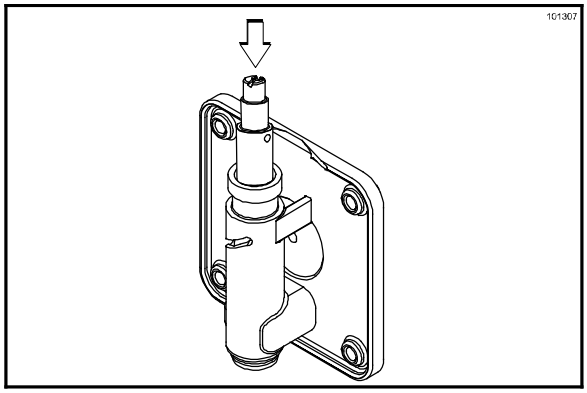

Figure 23

Step C - Self- Closing Door Assembly
Rotate the draw valve so the groove on the top of the draw valve is perpendicular to the door face.

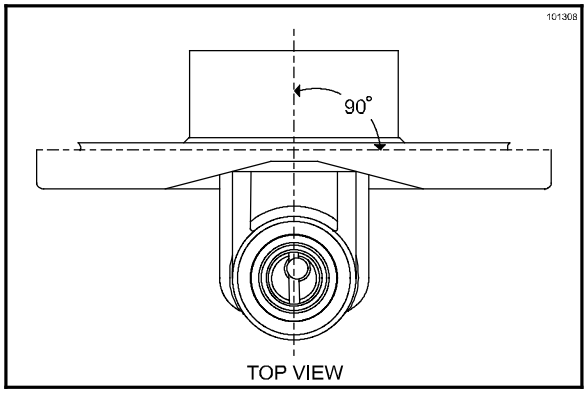

Figure 24

Step D - Self- Closing Door Assembly
Insert the ice buster through the door spout and into the slot located just above the lower o- ring.

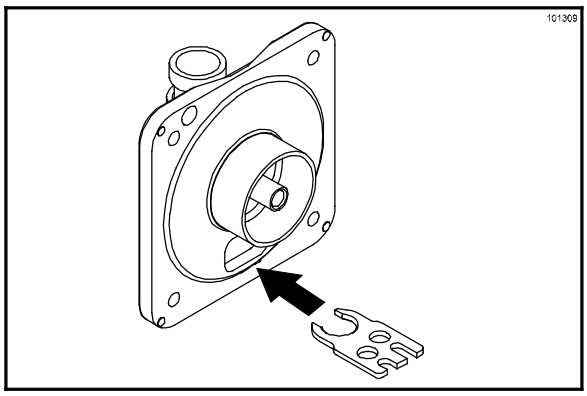

Figure 25

Step E - Self- Closing Door Assembly
With the ice buster in place, rotate the draw valve to allow installation of the draw handle. This will lock the ice buster in place. With the draw handle in place, install the draw handle pin. Close the draw valve by moving the handle to the left.

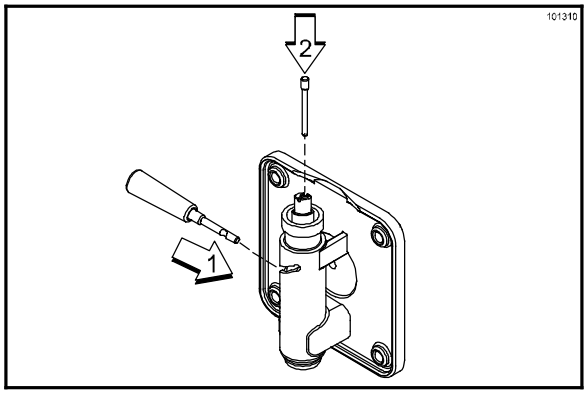

Figure 26

Step F - Self- Closing Door Assembly
Install the draw valve spring, draw switch cap plunger, and cap.

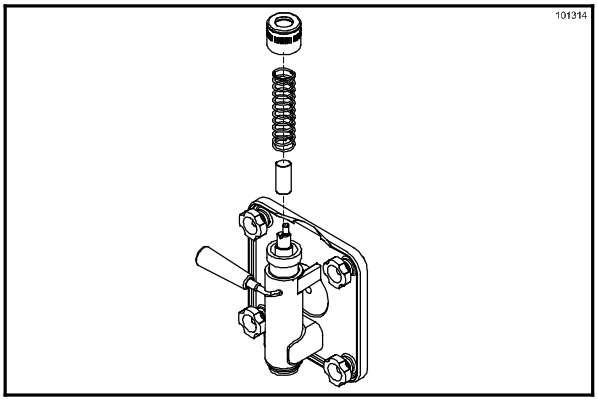

Figure 27

Step G - Self-Closing Door Assembly
Place the o-ring onto the prime plug and lubricate.

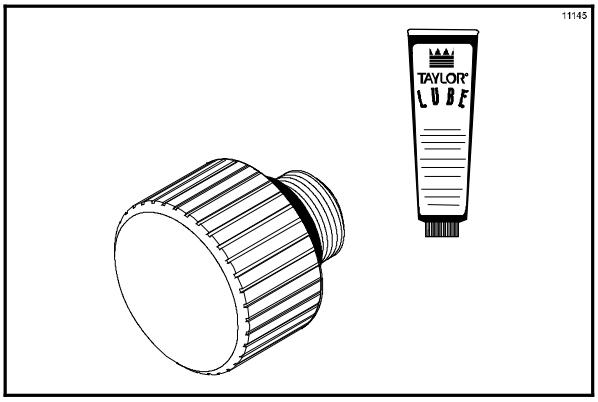

Figure 28

Step H - Self-Closing Door Assembly
Screw the prime plug into position on the front of the door.

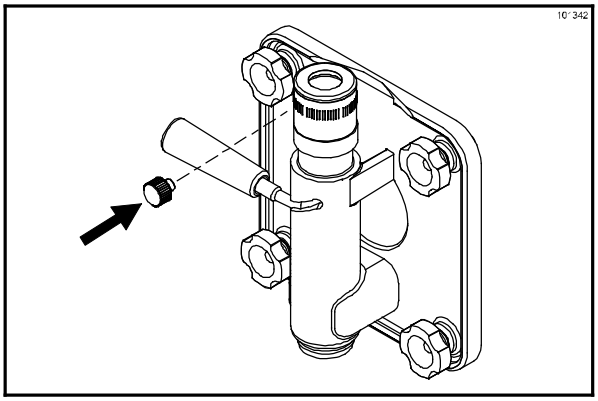

Figure 29

Step I - Self-Closing Door Assembly
Place the large rubber gasket into the groove on the back side of the freezer door.

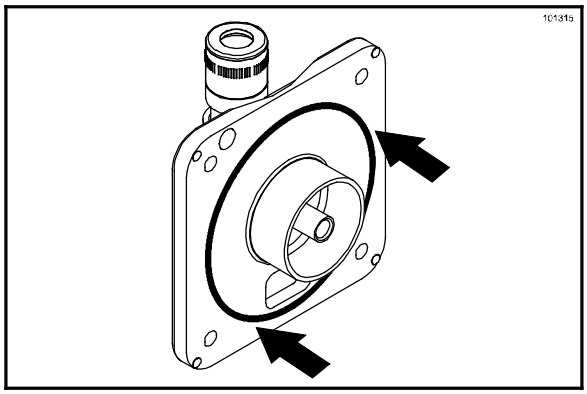

Figure 30

Step J - Self-Closing Door Assembly
Slide the white, plastic front bearing onto the bearing hub, making certain that the flanged end of the bearing is resting against the freezer door. **DO NOT** lubricate the door gasket or front bearing.

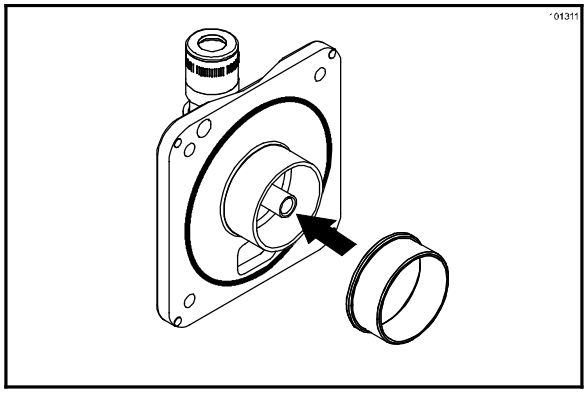

Figure 31

Step K - Self-Closing Door Assembly
Position the freezer door onto the four studs on the front of the freezing cylinder and push the door into place. Install the four handscrews onto the studs and tighten them equally in a crisscross pattern to insure that the door is snug. **DO NOT** over-tighten the handscrews.

Note: If the freezer door does not fit into place easily, position the open end of the beater assembly in the 11 o'clock position.

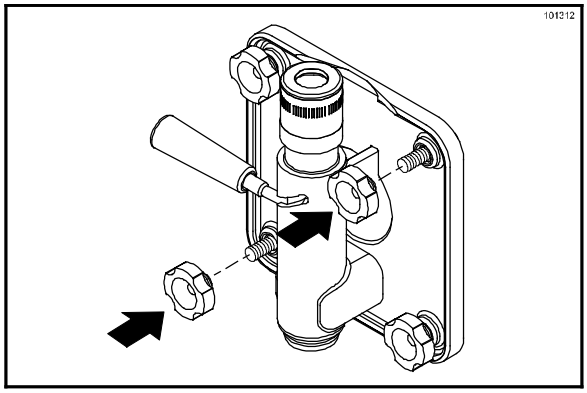

Figure 32

Step L - Self-Closing Door Assembly
Position the torque arm by inserting it down into the hole on the torque rotor which protrudes from the door. Verify proper installation by moving the torque rotor back and forth to be sure it moves freely.

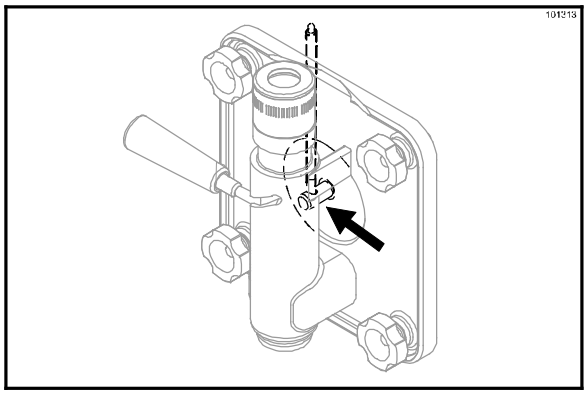

Figure 33

Proceed to Step 16.

Step 16
Slide the long drip pan into the hole in the front panel.

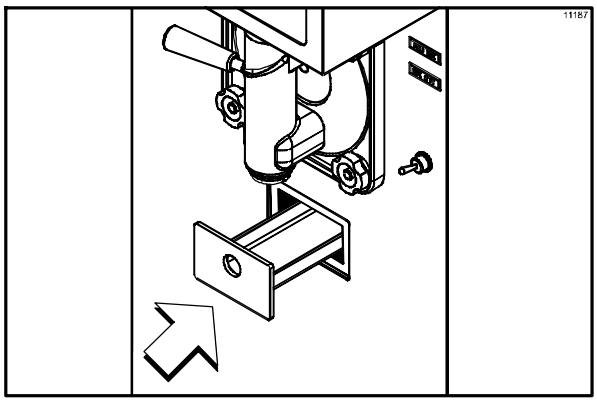

Figure 34

Step 17
Install the front drip tray and splash shield beneath the door spout.

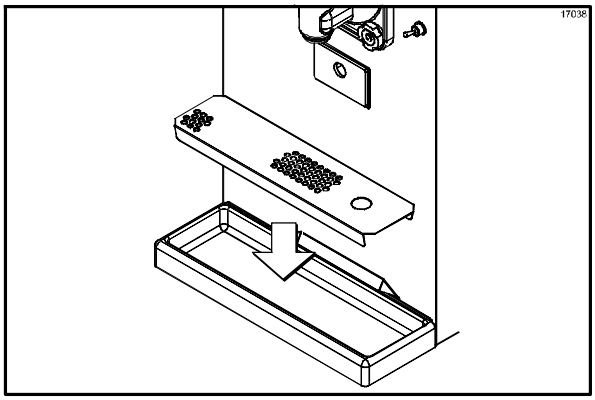

Figure 35

Step 18
With sanitized hands, or a plastic sanitized glove, lay the air/mix feed tube (optional) in the bottom of the mix hopper.

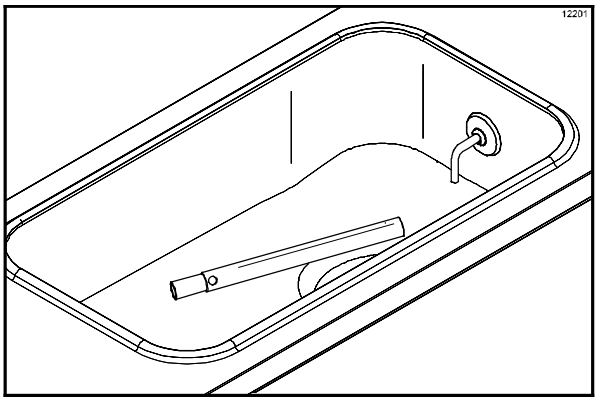

Figure 36

Sanitizing

Step 1
Prepare a 2- 1/2 gallon (9.5 liter) pail of cleaning/sanitizing solution with an active chlorine concentrate of 100 - 200 PPM (parts per million). USE WARM WATER AND FOLLOW THE MANUFACTURER'S SPECIFICATIONS.

Step 2
Pour the sanitizing solution into the hopper and allow it to flow into the freezing cylinder.

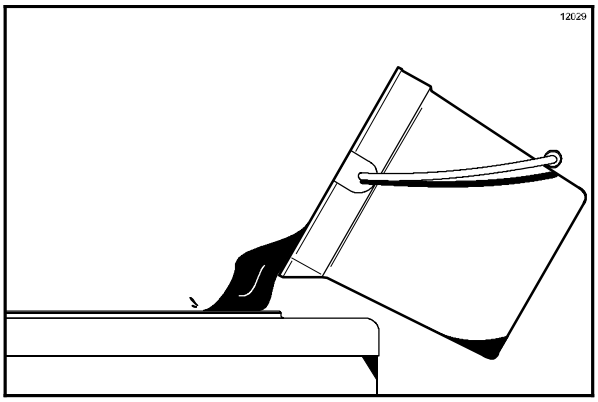

Figure 37

Step 3
While the solution is flowing into the freezing cylinder, brush clean the mix hopper, air/mix feed tube (optional) and mix inlet hole.

Step 4
Place the power switch in the WASH position. This will agitate the sanitizing solution in the freezing cylinder. Allow the solution to agitate for five minutes.

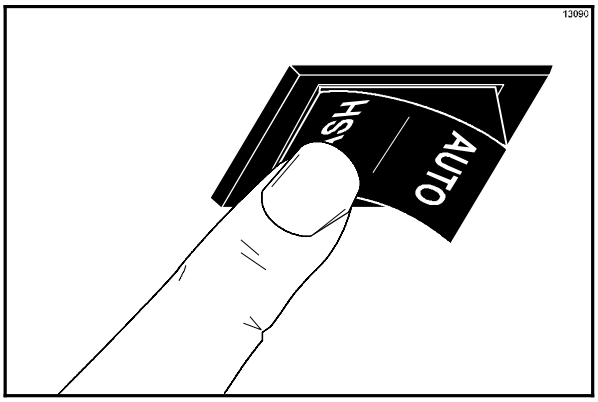

Figure 38

Step 5
Place an empty pail beneath the door spout and move the draw handle to the right. Draw off all the sanitizing solution. When the sanitizer stops flowing from the door spout, move the draw handle to the left and place the power switch in the OFF position.

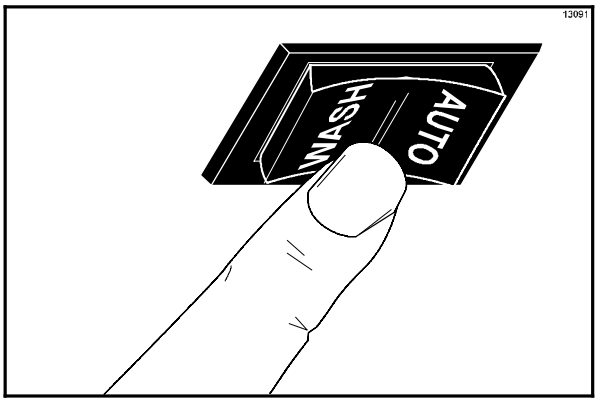

Figure 39

Step 6
Stand the air/mix feed tube (optional) in the corner of the hopper.

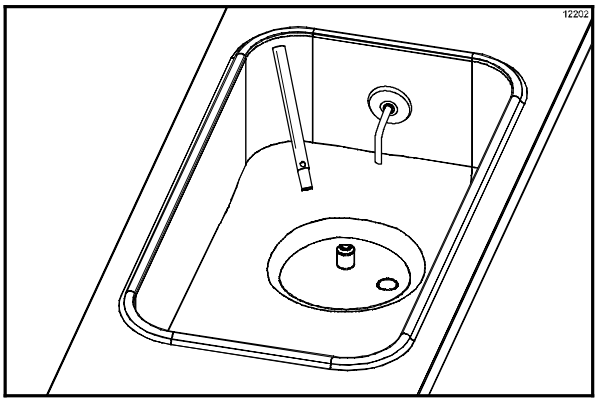

Figure 40

Priming the Freezing Cylinder

Step 1
With a pail beneath the door spout, move the draw handle to the right. Pour two gallons (7.6 liters) of FRESH mix into the hopper and allow it to flow into the freezing cylinder. This will force out any remaining sanitizing solution. When full strength mix is flowing from the door spout, move the draw handle to the left.

Step 2
When mix has stopped bubbling down into the freezing cylinder, install the air/mix feed tube (optional) in the mix inlet hole with the hole side down.

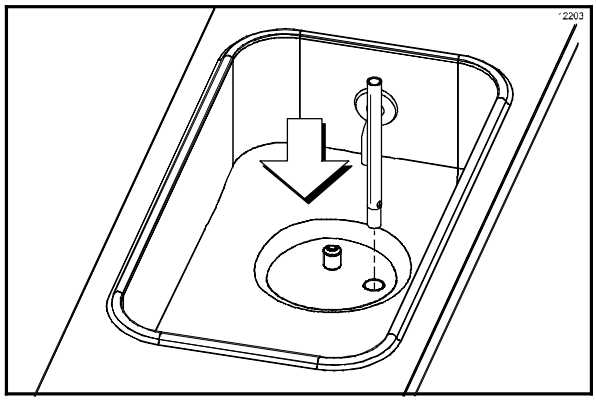

Figure 41

Step 3
Place the power switch in the AUTO position. When the unit cycles off, the product will be at serving viscosity. The viscosity (thickness) of the product can be adjusted by turning the viscosity adjustment screw on the upper right side under the display light. Turn the viscosity adjustment screw clockwise for a thicker product, or counterclockwise for a thinner product. After making an adjustment, allow the refrigeration system to cycle 2 or 3 times to accurately evaluate the viscosity.

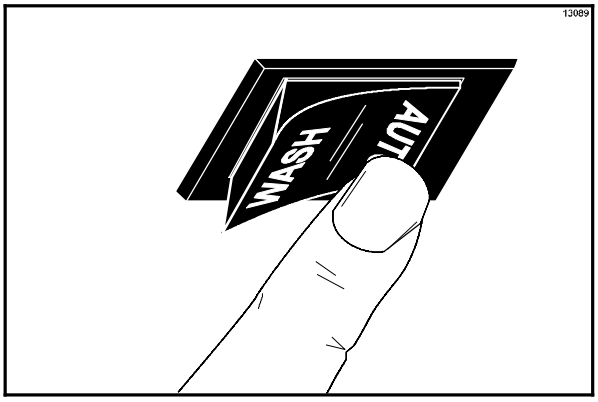

Figure 42

Step 4
Self-Closing Door Only: Loosen the prime plug. When product starts to leak from the bleed port, tighten the prime plug. Allow the product to continue filling the mix hopper until the upper mix level probe is satisfied and the fill system shuts off.

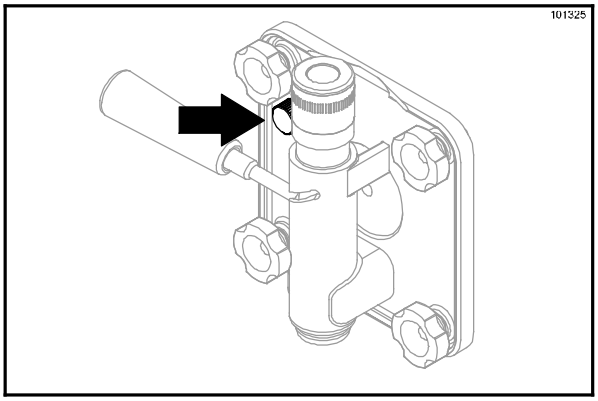

Figure 43

Step 5
Place the mix hopper cover in position. For proper operation, there must be a substantial amount of mix in the hopper. If the ADD MIX light illuminates, refill the mix hopper as soon as possible.

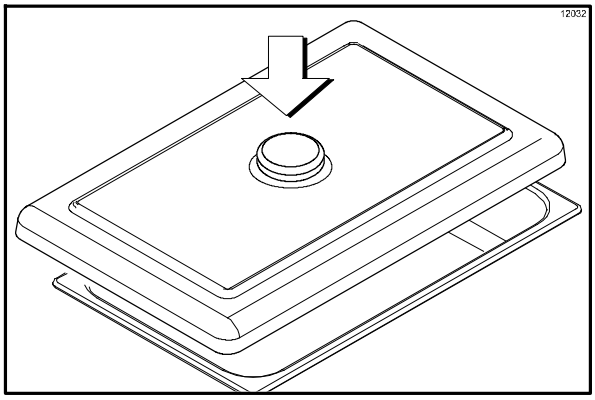

Figure 44

Closing Procedure

To disassemble this unit, the following items will be needed:

- Two cleaning pails
- Necessary brushes (provided with freezer)
- Cleaner
- Single service towels

Draining Product From The Freezing Cylinder

Step 1
Place the power switch in the OFF position as far ahead of cleaning time as possible to allow frozen product to soften for easier cleaning.

Step 2
Remove the hopper cover and the air/mix feed tube (if the unit is equipped with an air/mix feed tube). Take these parts to the sink for cleaning.

Step 3
If local health codes permit the use of rerun, place a sanitized, NSF approved stainless steel rerun container beneath the door spout. Place the power switch in the WASH position and move the draw handle to the right. When product stops flowing from the door spout, move the draw handle to the left and place the power switch in the OFF position. Place the sanitized lid on the rerun container and place it in the walk- in cooler.

Note: If local health codes DO NOT permit the use of rerun, the product must be discarded. Drain the product into a pail and properly discard it.

ALWAYS FOLLOW LOCAL HEALTH CODES

Rinsing

Step 1
Pour two gallons (7.6 liters) of cool, clean water into the mix hopper. With the brushes provided, scrub the mix hopper, float switch, and the mix inlet hole.

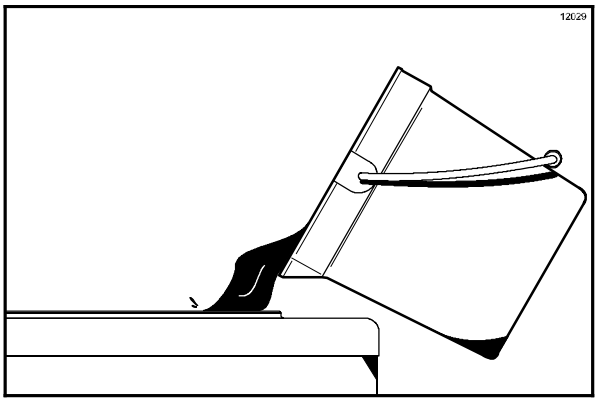

Figure 45

Step 2
With a pail beneath the door spout, place the power switch in the WASH position and move the draw handle to the right. Drain all the rinse water from the freezing cylinder. When the rinse water stops flowing from the door spout, move the draw handle to the left and place the power switch in the OFF position.

Repeat this procedure until the rinse water being drawn from the freezing cylinder is clear.

Cleaning

Step 1
Prepare a 2- 1/2 gallon (9.5 liter) pail of cleaning/sanitizing solution with an active chlorine concentrate of 100 - 200 PPM (parts per million). USE WARM WATER AND FOLLOW THE MANUFACTURER'S SPECIFICATIONS.

Step 2
Pour the cleaning solution into the hopper and allow it to flow into the freezing cylinder.

Step 3
While the solution is flowing into the freezing cylinder, brush-clean the mix hopper, float switch, and mix inlet hole.

Step 4
Place the power switch in the WASH position. This will agitate the cleaning solution in the freezing cylinder.

Step 5
Place an empty pail beneath the door spout and move the draw handle to the right. Draw off all the cleaning solution. When the solution stops flowing from the door spout, move the draw handle to the left, and place the power switch in the OFF position.

Disassembly

BE SURE THE POWER SWITCH IS IN THE OFF POSITION. Failure to follow this instruction may result in severe personal injury from hazardous moving parts.

Step 1
Remove the torque arm, handscrews, freezer door, torque rotor, beater assembly, scraper blades and drive shaft from the freezing cylinder. Take these parts to the sink for cleaning.

Step 2
Remove the front drip tray and the splash shield. Take these parts to the sink for cleaning.

Step 3
Remove the rear drip pan from the front panel. Note: If the drip pan is filled with an excessive amount of mix, it is an indication the drive shaft seal should be replaced or properly lubricated.

Brush Cleaning

Step 1
Prepare a sink of cleaning/sanitizing solution with an active chlorine concentrate of 100 - 200 PPM (parts per million). USE WARM WATER AND FOLLOW THE MANUFACTURER'S SPECIFICATIONS.
Make sure all brushes provided with the freezer are available for brush cleaning.

IMPORTANT: Follow the label directions. Too STRONG of a solution can cause parts damage, while too MILD of a solution will not provide adequate cleaning.

Step 2
Remove the o-ring and seal from the drive shaft. Remove the o-ring and the bearing from the torque rotor.

Step 3
From the freezer door, remove the draw valve, ice buster, front bearing, and gasket. Remove the prime plug (self- closing door, only). Remove all o-rings.

Note: To remove the o-ring, use a single service towel to grasp the o-ring, and apply pressure in an upward direction until the o-ring pops out of its groove. With the other hand, push the top of the o-ring forward until it rolls out of the groove and can be removed easily.

Step 4
Thoroughly brush clean all disassembled parts in the cleaning solution, making sure all lubricant and mix film is removed. Place all the cleaned parts on a clean, dry surface to air dry.

Step 5
Return to the freezer with a small amount of cleaning solution. Brush-clean the rear shell bearing at the back of the freezing cylinder with the black bristle brush.

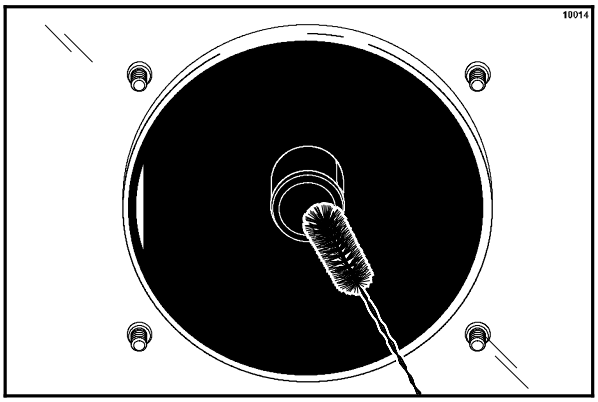

Figure 46

Step 6
Wipe clean all exterior surfaces of the freezer.

Section 7 Important: Operator Checklist

During Cleaning and Sanitizing:

ALWAYS FOLLOW LOCAL HEALTH CODES

Cleaning and sanitizing schedules are governed by federal, state, or local regulatory agencies, and must be followed accordingly. If the unit has a "Standby mode", it must not be used in lieu of proper cleaning and sanitizing procedures and frequencies set forth by the ruling health authority. The following check points should be stressed during the cleaning and sanitizing operations.

CLEANING AND SANITIZING MUST BE PERFORMED DAILY.

Troubleshooting Bacterial Count:

☐ 1. Thoroughly clean and sanitize machine regularly, including complete disassembly and brush cleaning.

☐ 2. Use all brushes supplied for thorough cleaning. The brushes are specially designed to reach all mix passageways.

☐ 3. Use the white bristle brush to clean the mix feed tube, which extends from the hopper down to the rear of the freezing cylinder.

☐ 4. Use the black bristle brush to thoroughly clean the rear shell bearing located at the rear of the freezing cylinder. Be sure to have a generous amount of cleaning solution on the brush.

☐ 5. IF LOCAL HEALTH CODES PERMIT THE USE OF RERUN, make sure the mix rerun is stored in a sanitized, covered stainless steel container and used the following day. DO NOT prime the machine with rerun. When using rerun, skim off the foam and discard, then mix the rerun with fresh mix in a ratio of 50/50 during the day's operation.

☐ 6. On a designated day of the week, run the mix as low as feasible and discard after closing. This will break the rerun cycle and reduce the possibility of high bacteria and coliform counts.

☐ 7. Properly prepare the cleaning and sanitizing solutions. Read and follow label directions carefully. Too strong of a solution may damage the parts and too weak of a solution will not do an adequate job of cleaning or sanitizing.

☐ 8. Temperature of mix in mix hopper and walk-in cooler should be below 40°F. (4.4°C.).

Regular Maintenance Checks:

☐ 1. Replace scraper blades that are nicked, damaged or worn down. Before installing the beater, be certain the scraper blade is properly attached.

☐ 2. Check rear shell bearing for signs of wear (excessive mix leakage in drip pan) and be certain it is properly cleaned.

☐ 3. Using a screwdriver and cloth towel, keep the rear shell bearing and the female square drive socket clean and free of lubricant and mix deposits.

☐ 4. Dispose of o-rings and seals if they are worn, torn, or fit too loosely, and replace with new ones.

☐ 5. Follow all lubricating procedures as outlined in "Assembly".

☐ 6. Check the condenser(s) for accumulation of dirt and lint. Dirty condensers will reduce the efficiency and capacity of the machine. Condensers should be cleaned **monthly** with a soft brush. **Never** use screwdrivers or other metal probes to clean between the fins.
Note: For machines equipped with an air filter, it will be necessary to vacuum clean the filters on a monthly schedule.

Winter Storage

If the place of business is to be closed during the winter months, it is important to protect the freezer by following certain precautions, particularly if the building is to be left unheated and subject to freezing conditions. Disconnect the freezer from the main power source to prevent possible electrical damage. Your local Taylor Distributor can perform this service for you.

Wrap detachable parts of the freezer such as beater, blades, drive shaft, and freezer door, and place in a protected dry place. Rubber trim parts and gaskets can be protected by wrapping with moisture-proof paper. All parts should be thoroughly cleaned of dried mix or lubrication accumulations which attract mice and other vermin.

Section 8 Troubleshooting Guide

PROBLEM	PROBABLE CAUSE	REMEDY	PAGE REF.
1. No product being dispensed.	a. Power switch is in the OFF position.	a. Place power switch in the AUTO position.	23
	b. Improper mixing of product.	b. Carefully follow directions for mixing product.	- - -
	c. Inadequate mix in hopper.	c. Fill hopper with mix.	24
	d. Product frozen-up in freezing cylinder.	d. Adjust viscosity adjustment accordingly.	13
	e. Unit out on reset.	e. Place power switch in the OFF position. Press the reset button. Return power switch to AUTO.	14
	f. Beater assembly is not rotating at all or counterclockwise. Power switch is not in AUTO.	f. The power switch must be in AUTO. If beater is rotating counterclockwise, call service technician to correct rotation.	1
	g. Unit unplugged at wall receptacle.	g. Plug in power cord.	- - -
	h. Tripped circuit breaker or blown fuse.	h. Reset circuit breaker or replace fuse.	- - -
2. Unit will not operate in the AUTO or “WASH” mode.	a. Unit unplugged at wall receptacle.	a. Plug in power cord.	- - -
	b. Tripped circuit breaker or blown fuse.	b. Reset circuit breaker or replace fuse.	- - -
	c. Unit out on reset.	c. Place the power switch in the OFF position. Press the reset button. Return power switch to AUTO.	14
3. No compressor operation in the AUTO mode.	a. Beater motor is out on overload.	a. Place power switch in OFF position. Press the reset button. Return power switch to AUTO.	13
	b. Condenser dirty A/C.	b. Clean condenser monthly.	27

PROBLEM	PROBABLE CAUSE	REMEDY	PAGE REF.
4. Product too thick.	a. Inadequate mix in hopper.	a. Fill hopper with mix.	24
	b. Improper mixing of product.	b. Carefully follow directions for mixing product.	- - -
	c. The viscosity adjustment is set incorrectly.	c. Adjust the viscosity control.	13
	d. The torque arm is not installed.	d. Install the torque arm.	18
5. Product too thin.	a. Missing, incorrectly installed, or bad scraper blade.	a. Install or replace scraper blade.	16
	b. Improper mixing of product.	b. Carefully follow directions for mixing product.	- - -
	c. The viscosity adjustment is set incorrectly.	c. Adjust accordingly.	13
	d. Incorrect beater rotation.	d. Contact service technician.	- - -
	e. Dirty condensers.	e. Clean regularly.	27
6. Scored walls of freezing cylinder.	a. Broken pin on beater assembly.	a. Repair or replace beater assembly.	- - -
	b. Front bearing worn or missing.	b. Replace or install front bearing.	16
7. Excessive leakage into rear drip pan.	a. Improper or inadequate lubrication of drive shaft seal.	a. Use correct lubricant (Taylor Lube) and follow lubrication procedures.	15
	b. Bad or missing seal on drive shaft.	b. Replace seal every 3 months.	31
	c. Worn rear shell bearing.	c. Contact service technician for replacement.	- - -
	d. Seal is installed inside out.	d. Install the seal correctly.	15
8. Excessive leakage from door spout.	a. Improper or inadequate lubrication of draw valve o-rings.	a. Use correct lubricant (Taylor Lube) and follow lubrication procedures.	15
	b. Bad or missing o-rings on draw valve.	b. Replace o-rings every 3 months.	31
9. Unable to remove drive shaft.	a. Lubrication on square end of drive shaft.	a. Do not lubricate square end. Contact service technician for replacement.	15
	b. Rounded corners of drive shaft, drive coupling, or both.	b. Contact service technician to replace drive shaft, drive coupling, or both.	- - -

Section 9 Parts Replacement Schedule

PART DESCRIPTION	EVERY 3 MONTHS	EVERY 6 MONTHS	ANNUALLY	QUANTITIES TO BE REPLACED
Drive Shaft Seal	X			1
Drive Shaft O-Ring	X			1
Scraper Blade	X			1
Freezer Door Gasket	X			1
Front Bearing	X			1
Draw Valve O-Rings	X			2
Black Bristle Brush - 1” x 2”		Inspect & Replace if Necessary	Minimum	1
White Bristle Brush -1-1/2” x 2”		Inspect & Replace if Necessary	Minimum	1
White Bristle Brush - 3” x 7”		Inspect & Replace if Necessary	Minimum	1

Section 10 Limited Warranty on Equipment

TAYLOR COMPANY LIMITED WARRANTY ON FREEZERS

Taylor Company, a division of Carrier Commercial Refrigeration, Inc. ("Taylor") is pleased to provide this limited warranty on new Taylor-branded freezer equipment available from Taylor to the market generally (the "Product") to the original purchaser only.

LIMITED WARRANTY

Taylor warrants the Product against failure due to defect in materials or workmanship under normal use and service as follows. All warranty periods begin on the date of original Product installation. If a part fails due to defect during the applicable warranty period, Taylor, through an authorized Taylor distributor or service agency, will provide a new or re- manufactured part, at Taylor's option, to replace the failed defective part at no charge for the part. Except as otherwise stated herein, these are Taylor's exclusive obligations under this limited warranty for a Product failure. This limited warranty is subject to all provisions, conditions, limitations and exclusions listed below and on the reverse (if any) of this document.

Product	Part	Limited Warranty Period
Soft Serve	Insulated shell assembly	Five (5) years
Frozen Yogurt **Shakes**	Refrigeration compressor (except service valve)	Five (5) years
Smoothies	Beater motors	Two (2) years
Frozen Beverage	Beater drive gear	Two (2) years
Batch Desserts	Printed circuit boards and Softech controls beginning with serial number H8024200	Two (2) years
	Parts not otherwise listed in this table or excluded below	One (1) year

LIMITED WARRANTY CONDITIONS

1. If the date of original installation of the Product cannot be verified, then the limited warranty period begins ninety (90) days from the date of Product manufacture (as indicated by the Product serial number). Proof of purchase may be required at time of service.
2. This limited warranty is valid only if the Product is installed and all required service work on the Product is performed by an authorized Taylor distributor or service agency, and only if genuine, new Taylor parts are used.
3. Installation, use, care, and maintenance must be normal and in accordance with all instructions contained in the Taylor Operator's Manual.
4. Defective parts must be returned to the authorized Taylor distributor or service agency for credit.
5. The use of any refrigerant other than that specified on the Product's data label will void this limited warranty.

LIMITED WARRANTY EXCEPTIONS

This limited warranty does **not** cover:

1. Labor or other costs incurred for diagnosing, repairing, removing, installing, shipping, servicing or handling of defective parts, replacement parts, or new Products.
2. Normal maintenance, cleaning and lubrication as outlined in the Taylor Operator's Manual, including cleaning of condensers.

131206

3. Replacement of wear items designated as Class “000” parts in the Taylor Operator’s Manual.
4. External hoses, electrical power supplies, and machine grounding.
5. Parts not supplied or designated by Taylor, or damages resulting from their use.
6. Return trips or waiting time required because a service technician is prevented from beginning warranty service work promptly upon arrival.
7. Failure, damage or repairs due to faulty installation, misapplication, abuse, no or improper servicing, unauthorized alteration or improper operation or use as indicated in the Taylor Operator’s Manual, including but not limited to the failure to use proper assembly and cleaning techniques, tools, or approved cleaning supplies.
8. Failure, damage or repairs due to theft, vandalism, wind, rain, flood, high water, water, lightning, earthquake or any other natural disaster, fire, corrosive environments, insect or rodent infestation, or other casualty, accident or condition beyond the reasonable control of Taylor; operation above or below the electrical or water supply specification of the Product; or components repaired or altered in any way so as, in the judgment of the Manufacturer, to adversely affect performance, or normal wear or deterioration.
9. Any Product purchased over the Internet.
10. Failure to start due to voltage conditions, blown fuses, open circuit breakers, or damages due to the inadequacy or interruption of electrical service.
11. Electricity or fuel costs, or increases in electricity or fuel costs from any reason whatsoever.
12. Damages resulting from the use of any refrigerant other than that specified on the Product’s data label will void this limited warranty.
13. Any cost to replace, refill or dispose of refrigerant, including the cost of refrigerant.
14. **ANY SPECIAL, INDIRECT OR CONSEQUENTIAL PROPERTY OR COMMERCIAL DAMAGE OF ANY NATURE WHATSOEVER.** Some jurisdictions do not allow the exclusion of incidental or consequential damages, so this limitation may not apply to you.

This limited warranty gives you specific legal rights, and you may also have other rights which vary from jurisdiction to jurisdiction.

LIMITATION OF WARRANTY

THIS LIMITED WARRANTY IS EXCLUSIVE AND IS IN LIEU OF ALL OTHER WARRANTIES, CONDITIONS AND/OR REMEDIES UNDER THE LAW, INCLUDING ANY IMPLIED WARRANTIES OR CONDITIONS OF MERCHANTABILITY OR FITNESS FOR A PARTICULAR PURPOSE. THE ORIGINAL OWNER’S SOLE REMEDY WITH RESPECT TO ANY PRODUCTS SHALL BE REPAIR OR REPLACEMENT OF DEFECTIVE COMPONENTS UNDER THE TERMS OF THIS LIMITED WARRANTY. ALL RIGHTS TO CONSEQUENTIAL OR INCIDENTAL DAMAGES (INCLUDING CLAIMS FOR LOST SALES, LOST PROFITS, PRODUCT LOSS, PROPERTY DAMAGES OR SERVICE EXPENSES) ARE EXPRESSLY EXCLUDED. THE EXPRESS WARRANTIES MADE IN THIS LIMITED WARRANTY MAY NOT BE ALTERED, ENLARGED, OR CHANGED BY ANY DISTRIBUTOR, DEALER, OR OTHER PERSON, WHATSOEVER.

LEGAL REMEDIES

The owner **must** notify Taylor in writing, by certified or registered letter to the following address, of any defect or complaint with the Product, stating the defect or complaint and a specific request for repair, replacement, or other correction of the Product under warranty, mailed at least thirty (30) days before pursuing any legal rights or remedies.

Taylor Company
a division of Carrier Commercial Refrigeration, Inc.
750 N. Blackhawk Blvd.
Rockton, IL 61072, U.S.A.

Section 11 Limited Warranty on Parts

TAYLOR COMPANY LIMITED WARRANTY ON TAYLOR GENUINE PARTS

Taylor Company, a division of Carrier Commercial Refrigeration, Inc. ("Taylor") is pleased to provide this limited warranty on new Taylor genuine replacement components and parts available from Taylor to the market generally (the "Parts") to the original purchaser only.

LIMITED WARRANTY

Taylor warrants the Parts against failure due to defect in materials or workmanship under normal use and service as follows. All warranty periods begin on the date of original installation of the Part in the Taylor unit. If a Part fails due to defect during the applicable warranty period, Taylor, through an authorized Taylor distributor or service agency, will provide a new or re- manufactured Part, at Taylor's option, to replace the failed defective Part at no charge for the Part. Except as otherwise stated herein, these are Taylor's exclusive obligations under this limited warranty for a Part failure. This limited warranty is subject to all provisions, conditions, limitations and exclusions listed below and on the reverse (if any) of this document.

Part's Warranty Class Code or Part	Limited Warranty Period
Class 103 Parts[1]	Three (3) months
Class 212 Parts[2]	Twelve (12) months
Class 512 Parts	Twelve (12) months
Class 000 Parts	No warranty
Taylor Part #072454 (Motor- 24VDC *C832/C842*)	Four (4) years

LIMITED WARRANTY CONDITIONS

1. If the date of original installation of the Part cannot be otherwise verified, proof of purchase may be required at time of service.
2. This limited warranty is valid only if the Part is installed and all required service work in connection with the Part is performed by an authorized Taylor distributor or service agency.
3. The limited warranty applies only to Parts remaining in use by their original owner at their original installation location in the unit of original installation.
4. Installation, use, care, and maintenance must be normal and in accordance with all instructions contained in the Taylor Operator's Manual.
5. Defective Parts must be returned to the authorized Taylor distributor or service agency for credit.
6. This warranty is not intended to shorten the length of any warranty coverage provided pursuant to a separate Taylor Limited Warranty on freezer or grill equipment.
7. The use of any refrigerant other than that specified for the unit in which the Part is installed will void this limited warranty.

[1, 2] Except that Taylor Part #032129SER2 (Compressor-Air-230V SERV) and Taylor Part #075506SER1 (Compressor-Air-115V 60HZ) shall have a limited warranty period of twelve (12) months when used in Taylor freezer equipment and a limited warranty period of two (2) years when used in Taylor grill equipment.

LIMITED WARRANTY EXCEPTIONS

This limited warranty does **not** cover:

1. Labor or other costs incurred for diagnosing, repairing, removing, installing, shipping, servicing or handling of defective Parts, replacement Parts, or new Parts.
2. Normal maintenance, cleaning and lubrication as outlined in the Taylor Operator's Manual, including cleaning of condensers or carbon and grease buildup.
3. Required service, whether cleaning or general repairs, to return the cooking surface assemblies, including the upper platen and lower plate, to an operational condition to achieve proper cooking or allow proper assembly of release sheets and clips as a result of grease build-up on the cooking surfaces, including but not limited to the platen and plate, sides of the shroud or top of the shroud.
4. Replacement of cooking surfaces, including the upper platen and lower plate, due to pitting or corrosion (or in the case of the upper platen, due to loss of plating) as a result of damage due to the impact of spatulas or other small wares used during the cooking process or as a result of the use of cleaners, cleaning materials or cleaning processes not approved for use by Taylor.
5. Replacement of wear items designated as Class "000" Parts in the Taylor Operator's Manual, as well as any release sheets and clips for the Product's upper platen assembly.
6. External hoses, electrical power supplies, and machine grounding.
7. Parts not supplied or designated by Taylor, or damages resulting from their use.
8. Return trips or waiting time required because a service technician is prevented from beginning warranty service work promptly upon arrival.
9. Failure, damage or repairs due to faulty installation, misapplication, abuse, no or improper servicing, unauthorized alteration or improper operation or use as indicated in the Taylor Operator's Manual, including but not limited to the failure to use proper assembly and cleaning techniques, tools, or approved cleaning supplies.
10. Failure, damage or repairs due to theft, vandalism, wind, rain, flood, high water, water, lightning, earthquake or any other natural disaster, fire, corrosive environments, insect or rodent infestation, or other casualty, accident or condition beyond the reasonable control of Taylor; operation above or below the gas, electrical or water supply specification of the unit in which a part is installed; or Parts or the units in which they are installed repaired or altered in any way so as, in the judgment of Taylor, to adversely affect performance, or normal wear or deterioration.
11. Any Part purchased over the Internet.
12. Failure to start due to voltage conditions, blown fuses, open circuit breakers, or damages due to the inadequacy or interruption of electrical service.
13. Electricity, gas or other fuel costs, or increases in electricity or fuel costs from any reason whatsoever.
14. Damages resulting from the use of any refrigerant other than that specified for the unit in which the Part is installed will void this limited warranty.
15. Any cost to replace, refill or dispose of refrigerant, including the cost of refrigerant.
16. **ANY SPECIAL, INDIRECT OR CONSEQUENTIAL PROPERTY OR COMMERCIAL DAMAGE OF ANY NATURE WHATSOEVER.** Some jurisdictions do not allow the exclusion of incidental or consequential damages, so this limitation may not apply to you.

This limited warranty gives you specific legal rights, and you may also have other rights which vary from jurisdiction to jurisdiction.

LIMITATION OF WARRANTY

THIS LIMITED WARRANTY IS EXCLUSIVE AND IS IN LIEU OF ALL OTHER WARRANTIES, CONDITIONS AND/OR REMEDIES UNDER THE LAW, INCLUDING ANY IMPLIED WARRANTIES OR CONDITIONS OF MERCHANTABILITY OR FITNESS FOR A PARTICULAR PURPOSE. THE ORIGINAL OWNER'S SOLE REMEDY WITH RESPECT TO ANY PRODUCTS SHALL BE REPAIR OR REPLACEMENT OF DEFECTIVE PARTS UNDER THE TERMS OF THIS LIMITED WARRANTY. ALL RIGHTS TO CONSEQUENTIAL OR INCIDENTAL DAMAGES (INCLUDING CLAIMS FOR LOST SALES, LOST PROFITS, PRODUCT LOSS, PROPERTY DAMAGES OR SERVICE EXPENSES) ARE EXPRESSLY EXCLUDED. THE EXPRESS WARRANTIES MADE IN THIS LIMITED WARRANTY MAY NOT BE ALTERED, ENLARGED, OR CHANGED BY ANY DISTRIBUTOR, DEALER, OR OTHER PERSON, WHATSOEVER.

LEGAL REMEDIES

The owner **must** notify Taylor in writing, by certified or registered letter to the following address, of any defect or complaint with the Part, stating the defect or complaint and a specific request for repair, replacement, or other correction of the Part under warranty, mailed at least thirty (30) days before pursuing any legal rights or remedies.

Taylor Company
a division of Carrier Commercial Refrigeration, Inc.
750 N. Blackhawk Blvd.
Rockton, IL 61072, U.S.A.

428
062598-12
11/13/13

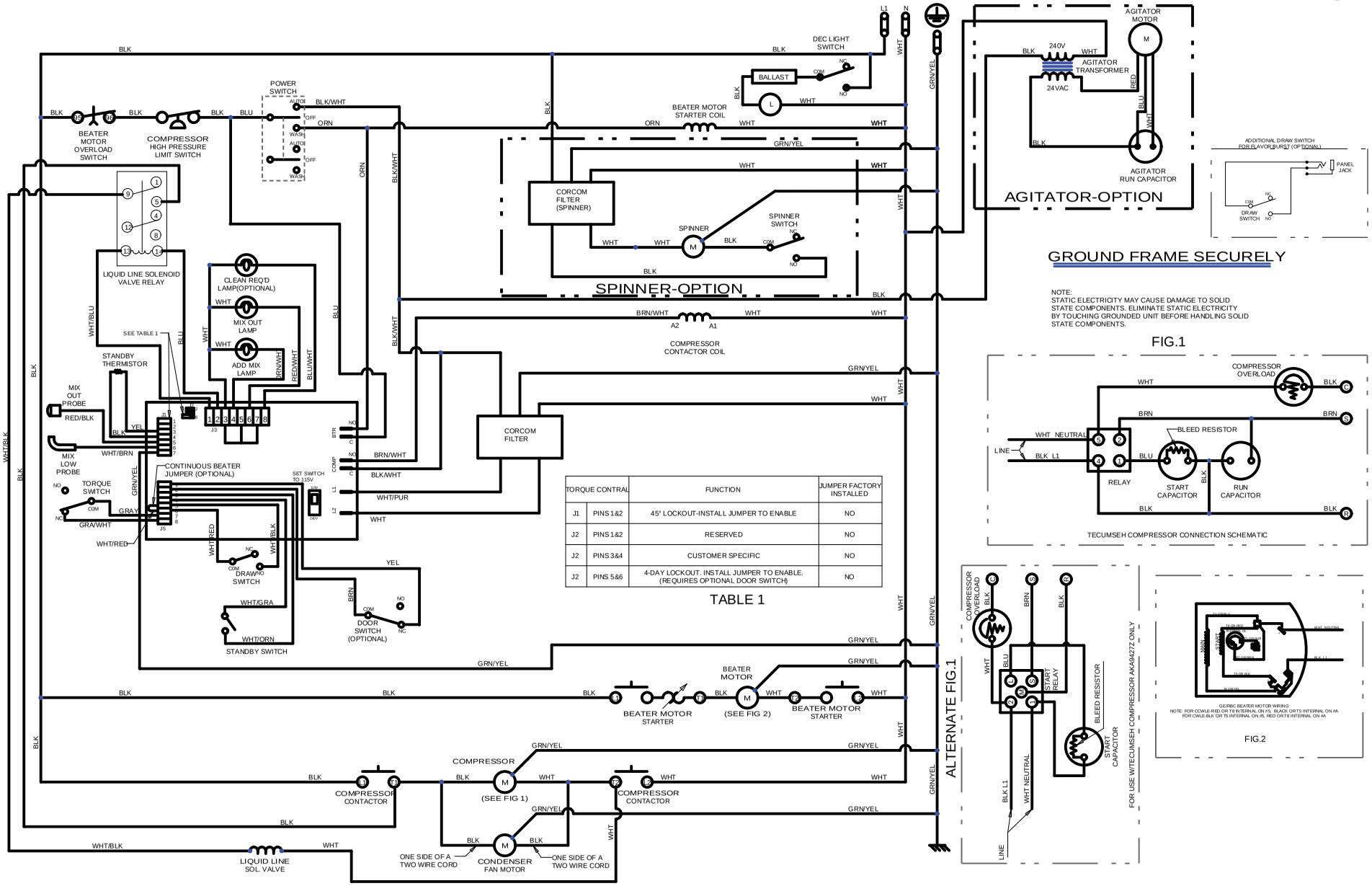

TORQUE CONTRAL		FUNCTION	JUMPER FACTORY INSTALLED
J1	PINS 1&2	45° LOCKOUT-INSTALL JUMPER TO ENABLE	NO
J2	PINS 1&2	RESERVED	NO
J2	PINS 3&4	CUSTOMER SPECIFIC	NO
J2	PINS 5&6	4-DAY LOCKOUT. INSTALL JUMPER TO ENABLE. (REQUIRES OPTIONAL DOOR SWITCH)	NO

TABLE 1

428
062598-40
11/13/13

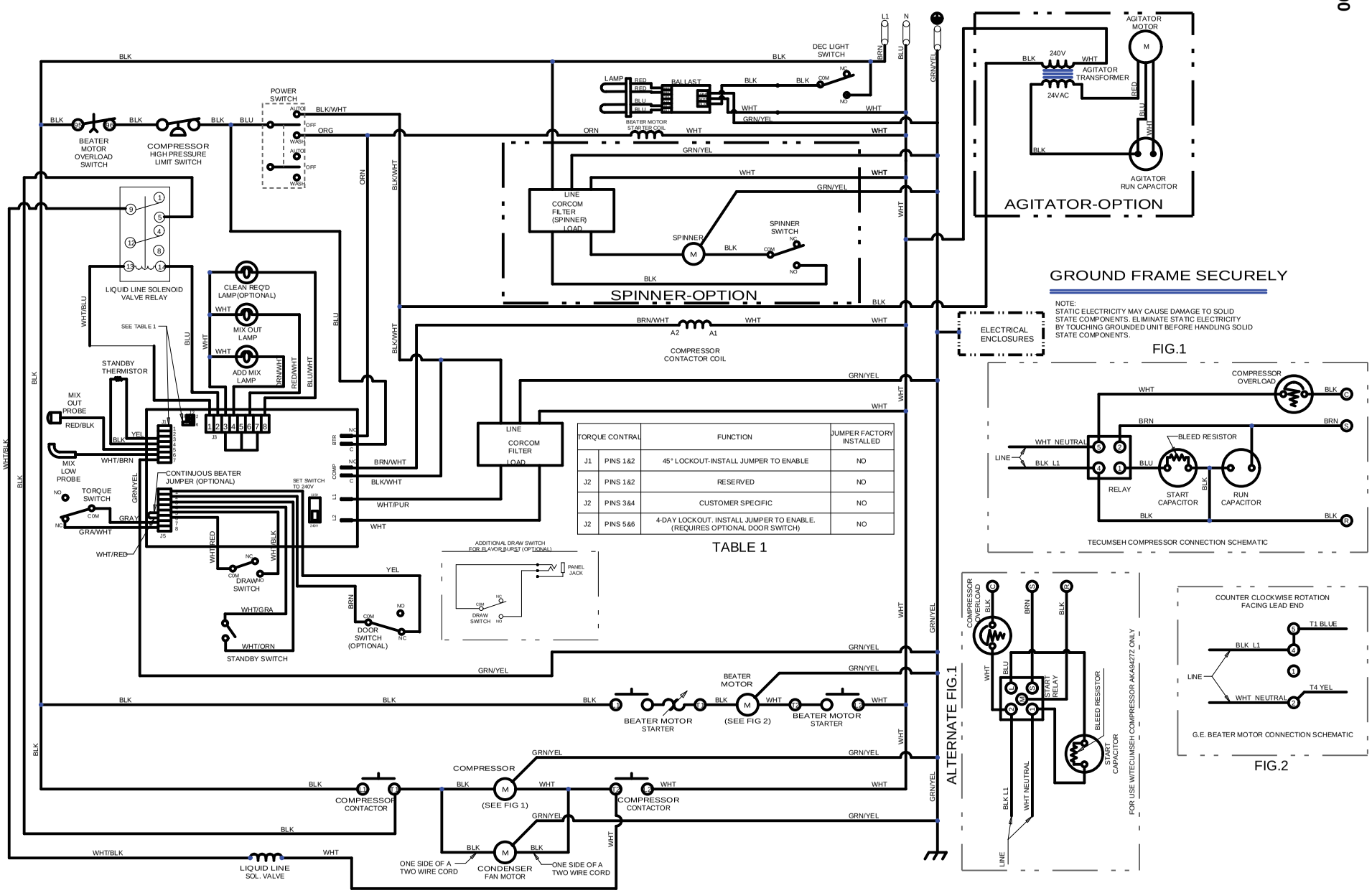

TORQUE CONTRAL		FUNCTION	JUMPER FACTORY INSTALLED
J1	PINS 1&2	45° LOCKOUT-INSTALL JUMPER TO ENABLE	NO
J2	PINS 1&2	RESERVED	NO
J2	PINS 3&4	CUSTOMER SPECIFIC	NO
J2	PINS 5&6	4-DAY LOCKOUT. INSTALL JUMPER TO ENABLE. (REQUIRES OPTIONAL DOOR SWITCH)	NO

TABLE 1