OPERATOR'S
MANUAL

Model BC10/BW11
Razzle Blenders

Original Operating Instructions

052544-M **2/1/01 (Original Publication)**
(Updated 7/20/15)

Complete this page for quick reference when service is required:

Taylor Distributor:_____

Address:_____

Phone:_____

Service:_____

Parts:_____

Date of Installation:_____

Information found on the data label:

Model Number:_____

Serial Number:_____

Electrical Specs: Voltage_____Cycle_____

Phase_____

Maximum Fuse Size:_____A

Minimum Wire Ampacity:_____A

© 2001 Carrier Commercial Refrigeration, Inc.
052544- M
Any unauthorized reproduction, disclosure, or distribution of copies by any person of any portion of this work may be a violation of Copyright Law of the United States of America and other countries, could result in the awarding of Statutory Damages of up to $250,000 (17 USC 504) for infringement, and may result in further civil and criminal penalties.
All rights reserved.

Taylor Company
a division of Carrier Commercial Refrigeration, Inc.
750 N. Blackhawk Blvd.
Rockton, IL 61072

Table of Contents

Section 1 To the Installer 1

Installer Safety 1
Site Preparation 1
Electrical Connections 2
Foot Pedal Instructions 2

Section 2 To the Operator 3

Section 3 Safety 4

Section 4 Operator Parts Identification 6

BC10 - Standard Unit 6
BC10 - Unit Equipped With Timer 8
BW11 - Standard Unit 10
Accessories 12
Optional Dispensers 13
Optional Large Candy Dispenser Canister Assembly (X53638-1) 18
Optional Small Candy Dispenser Canister Assembly (X53638-2) 19

Section 5 Important: To the Operator 20

On/Off Switch 20
Start Switch (Timer Equipped Units, Only) 20
Foot Pedal 20
Reset Switch 20
Splash Guard 21
Motor 21
Agitators 21
Candy Dispenser Canisters 22

Section 6 Operating Procedures **23**

Mixing Instructions 23

Daily Cleaning 25

Sanitizing 26

Section 7 Limited Warranty on Equipment **27**

Note: Continuing research results in steady improvements; therefore, information in this manual is subject to change without notice.

Note: Only instructions originating from the factory or its authorized translation representative(s) are considered to be the original set of instructions.

© 2001 Carrier Commercial Refrigeration, Inc. (Original Publication)
Updated July, 2015
052544- M
Any unauthorized reproduction, disclosure, or distribution of copies by any person of any portion of this work may be a violation of Copyright Law of the United States of America and other countries, could result in the awarding of Statutory Damages of up to $250,000 (17 USC 504) for infringement, and may result in further civil and criminal penalties.
All rights reserved.

Taylor Company
a division of Carrier Commercial Refrigeration, Inc.
750 N. Blackhawk Blvd.
Rockton, IL 61072

Section 1 To the Installer

The following information has been included in the manual as safety and regulatory guidelines. For complete installation instructions, please see the Installation Checklist.

Installer Safety

In all areas of the world, equipment should be installed in accordance with existing local codes. Please contact your local authorities if you have any questions.

Care should be taken to ensure that all basic safety practices are followed during the installation and servicing activities related to the installation and service of Taylor equipment.

- Only authorized Taylor service personnel should perform installation and repairs on the equipment.
- Authorized service personnel must ensure that the proper PPE is available and worn when required during installation and service.
- Authorized service personnel must remove all metal jewelry, rings, and watches before working on electrical equipment.

The main power supply(s) to the machine must be disconnected prior to performing any repairs. Failure to follow this instruction may result in personal injury or death from electrical shock or hazardous moving parts as well as poor performance or damage to the equipment.

Note: All repairs must be performed by an authorized Taylor Service Technician.

This unit has many sharp edges that can cause severe injuries.

Site Preparation

Review the area where the unit will be installed before uncrating the unit. Make sure that all possible hazards to the user and the equipment have been addressed.

For Indoor Use Only: This unit is designed to operate indoors, under normal ambient temperatures of 70°- 75°F (21°- 24°C). The unit has successfully performed in high ambient temperatures of 104°(40°C) at reduced capacities.

This unit must **NOT** be installed in an area where a water jet or hose can be used. **NEVER** use a water jet or hose to rinse or clean the unit. Failure to follow this instruction may result in electrocution.

This unit must be installed on a level surface to avoid the hazard of tipping. Extreme care should be taken in moving this equipment for any reason. Failure to comply may result in personal injury or equipment damage.

Uncrate the unit and inspect it for damage. Report any damage to your Taylor Distributor.

This piece of equipment is made in the USA and has USA sizes of hardware. All metric conversions are approximate and vary in size.

Electrical Connections

In the United States, this equipment is intended to be installed in accordance with the National Electrical Code (NEC), ANSI/NFPA 70- 1987. The purpose of the NEC code is the practical safeguarding of persons and property from hazards arising from the use of electricity. This code contains provisions considered necessary for safety. Compliance therewith and proper maintenance will result in an installation essentially free from hazard!

In all other areas of the world, equipment should be installed in accordance with the existing local codes. Please contact your local authorities.

FOLLOW YOUR LOCAL ELECTRICAL CODES!

Each unit requires one power supply for each data label on the unit. Check the data label(s) on the unit for branch circuit overcurrent protection or fuse, circuit ampacity, and other electrical specifications. Refer to the wiring diagram provided inside of the electrical box for proper power connections.

CAUTION: THIS EQUIPMENT MUST BE PROPERLY GROUNDED! FAILURE TO DO SO CAN RESULT IN SEVERE PERSONAL INJURY FROM ELECTRICAL SHOCK!

This equipment is provided with a grounding lug that is to be properly attached to the rear of the frame by the authorized installer. The installation location is marked by the equipotential bonding symbol (5021 of IEC 60417- 1) on the removable panel and the frame.

- Stationary appliances which are not equipped with a power cord and a plug or other device to disconnect the appliance from the power source must have an all- pole disconnecting device with a contact gap of at least 3 mm installed in the external installation.
- Appliances that are permanently connected to fixed wiring and for which leakage currents may exceed 10 mA, particularly when disconnected or not used for long periods, or during initial installation, shall have protective devices such as a GFI, to protect against the leakage of current, installed by the authorized personnel to the local codes.
- Supply cords used with this unit shall be oil-resistant, sheathed flexible cable not lighter than ordinary polychloroprene or other equivalent synthetic elastomer-sheathed cord (Code designation 60245 IEC 57) installed with the proper cord anchorage to relieve conductors from strain, including twisting, at the terminals and protect the insulation of the conductors from abrasion.

  If the supply cord is damaged, it must be replaced by the manufacturer, its service agent, or similarly qualified person, in order to avoid a hazard.

Foot Pedal Instructions

The foot pedal is an optional accessory on units not equipped with a timer. To use the foot pedal to control the mixer, connect the foot pedal to a grounded wall outlet. Plug the mixer cord into the back of the foot pedal plug. In this mode, both the On/Off switch and the foot pedal must be activated. Leave the On/Off switch in the ON position when you wish to use the foot control. Make sure the foot control is kept where it will not be activated accidentally. The foot guard is an additional design feature which helps prevent accidental use of the foot pedal.

Section 2 To the Operator

The mixer you have purchased has been carefully engineered and manufactured to give you dependable operation. Mixing various candies, cookies, fruits, nuts, liquid flavors, and other food items into ice cream or frozen yogurt has made unlimited flavor combinations and product textures available.

The development of counter and wall mount mixers have made this unlimited resource available to even very small retail outlets and to those facilities where counter space is limited.

The mixer, when properly operated and cared for, will produce a consistent, quality product. Like all mechanical products, it will require cleaning and maintenance. A minimum amount of care and attention is necessary if the operating procedures outlined in this manual are followed closely.

This Operator's Manual should be read before operating or performing any maintenance on your equipment. In the event that you should require technical assistance, please contact your local authorized Taylor Distributor.

Note: Your Taylor warranty is valid only if the parts are authorized Taylor parts, purchased from the local authorized Taylor Distributor, and only if all required service work is provided by an authorized Taylor service technician. Taylor reserves the right to deny warranty claims on units or parts if non-Taylor approved parts or incorrect refrigerant were installed in the unit, system modifications were performed beyond factory recommendations, or it is determined that the failure was caused by abuse, misuse, neglect, or failure to follow all operating instructions. For full details of your Taylor Warranty, please see the Limited Warranty section in this manual.

Note: Constant research results in steady improvements; therefore, information in this manual is subject to change without notice.

NSF approvals of the Models BC10 and BW11 were obtained by the Vita-Mix Corporation, 8615 Usher Road, Cleveland, Ohio 44138.

If the crossed out wheeled bin symbol is affixed to this product, it signifies that this product is compliant with the EU Directive as well as other similar legislation in effect after August 13, 2005. Therefore, it must be collected separately after its use is completed, and cannot be disposed as unsorted municipal waste.

The user is responsible for returning the product to the appropriate collection facility, as specified by your local code. For additional information regarding applicable local laws, please contact the municipal facility and/or local distributor.

Section 3 Safety

Taylor is concerned about the safety of the operator when he or she comes in contact with the blender and its parts. Taylor has gone to extreme efforts to provide built- in safety features to protect both you and the service technician. As an example, warning labels have been attached to the unit to further point out safety precautions to the operator.

IMPORTANT - Failure to adhere to the following safety precautions may result in severe personal injury or death. Failure to comply with these warnings may damage the machine and its components. Component damage will result in part replacement expense and service repair expense. SAVE THESE INSTRUCTIONS FOR FUTURE REFERENCE

To Operate Safely:

DO NOT operate the unit without reading this operator's manual. Failure to follow this instruction may result in equipment damage, poor performance, health hazards, or personal injury.

This appliance is to be used only by trained personnel. It is not intended for use by children or people with reduced physical, sensory, or mental capabilities, or lack of experience and knowledge, unless given supervision or instruction concerning the use of the appliance by a person responsible for their safety. Children should be supervised to ensure that they do not play with the appliance.

This unit is provided with an equipotential grounding lug that is to be properly attached to the rear of the frame by the authorized installer. The installation location is marked by the equipotential bonding symbol (5021 of IEC 60417-1) on both the removable panel and the frame.

DO NOT use a water jet to clean or rinse the unit. Failure to follow these instructions may result in serious electrical shock.

- **DO NOT** operate the unit unless it is properly grounded.
- **DO NOT** operate the unit with larger fuses than specified on the data label.
- All repairs must be performed by an authorized Taylor service technician.
- The main power supplies to machine must be disconnected prior to performing repairs.
- Cord Connected Units: Only Taylor authorized service technicians or licensed electricians may install a plug or replacement cord on these units.
- **DO NOT** operate this appliance if the power cord is damaged.
- **DO NOT** use this appliance outdoors.
- Stationary appliances which are not equipped with a power cord and a plug or another device to disconnect the appliance from the power source must have an all-pole disconnecting device with a contact gap of at least 3 mm installed in the external installation.
- Appliances that are permanently connected to fixed wiring and for which leakage currents may exceed 10 mA, particularly when disconnected or not used for long periods, or during initial installation, shall have protective devices such as a GFI, to protect against the leakage of current, installed by the authorized personnel to the local codes.

- Supply cords used with this unit shall be oil-resistant, sheathed flexible cable not lighter than ordinary polychloroprene or other equivalent synthetic elastomer- sheathed cord (Code designation 60245 IEC 57) installed with the proper cord anchorage to relieve conductors from strain, including twisting, at the terminals and protect the insulation of the conductors from abrasion.

  If the supply cord is damaged, it must be replaced by the manufacturer, its service agent, or similarly qualified person, in order to avoid a hazard.

Failure to follow these instructions may result in electrocution. Contact your local authorized Taylor Distributor for service.

- **DO NOT** allow children or untrained personnel to operate this machine.
- **DO NOT** operate the unit unless all service panels and access doors are restrained with screws.
- **AVOID** contact with the agitator shaft and other moving parts.
- Make sure the splash guard is installed prior to operating the appliance.
- **DO NOT** disassemble or install parts unless the On/Off switch is in the OFF position.
- If unit is equipped with a foot pedal, always use the foot pedal guard. Avoid accidental use of the foot pedal. When using the foot pedal, make sure the appliance is located where accidental contact with the pedal is not likely. When the mixer is not in use, place the front switch in the OFF position to avoid accidental use of the pedal.

Failure to follow these instructions may result in severe personal injury from hazardous moving parts.

DO NOT allow the power cord to hang over the edge of the counter or touch hot surfaces. Failure to comply may result in an electrical fire.

DO NOT operate this appliance if it malfunctions or is damaged in any way. Failure to follow this instruction may result in injury or component damage.

Cleaning and sanitizing schedules are governed by your Federal, State, or local regulatory agencies and must be followed accordingly. Please refer to the cleaning section of this manual for the proper procedure to clean this unit.

DO NOT use attachments not recommended or sold by Taylor. Doing so may cause fire, electric shock, injury, or equipment damage.

Make sure the mixer is sitting or mounted solidly on a sturdy surface during operation. Failure to comply may result in injury or equipment damage.

WARNING!

Some consumers are highly allergic to peanuts, peanut oil, and peanut dust. In some severe cases, peanut allergy reactions can cause death. When blending product with peanuts, make sure excess product is cleaned from the agitator shaft to eliminate the fear of product carryover.

NOISE LEVEL: Airborne noise emission does not exceed 78 dB(A) when measured at a distance of 1.0 meter from the surface of the machine and at a height of 1.6 meters from the floor.

BC10 - Standard Unit

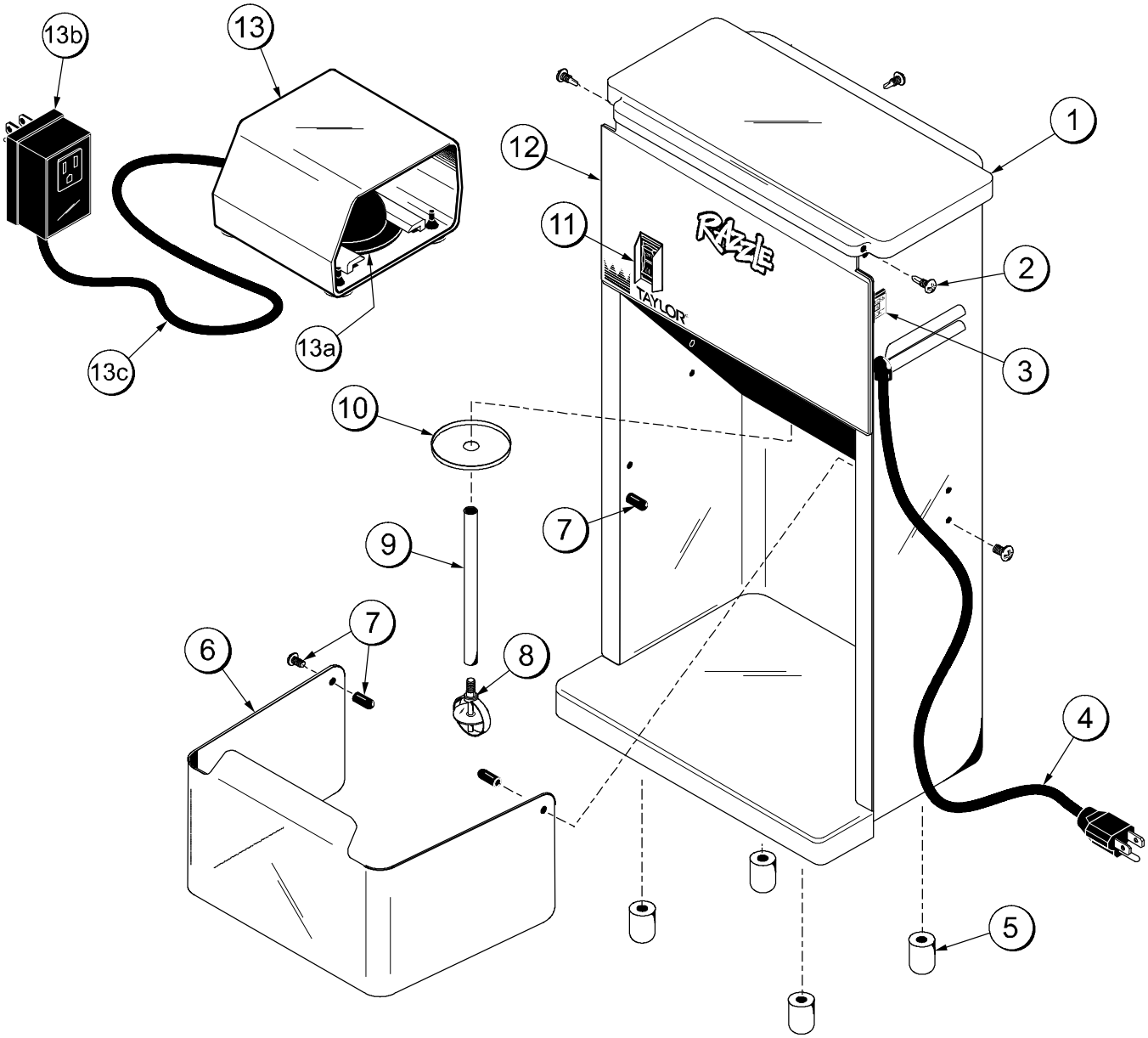

130524

BC10 Standard Unit - Exploded View Parts Identification

ITEM	DESCRIPTION	PART NO.
1	CAP- MIXER	051484
2	SCREW- MIXER- RETAINER CAP	051487
3	BREAKER- CIRCUIT- MIXER- 3A- 120V	051489
	BREAKER- CIRCUIT- MIXER- 5A - 220/240V	051490
4	CORD- MIXER- 18/3 GROUNDED W/PLUG	051491
5	FOOT A.- MIXER- PLUGGED- PKG OF 4	051500
6	GUARD - SPLASH- MIXER	051499
7	PIVOT PIN&SCREW*PKG OF 4*	051507
8	AGITATOR- MIXER- PERM SOFT	051497
9	SHAFT- MIXER- AGITATOR- EXT - PERMANENT	051495

ITEM	DESCRIPTION	PART NO.
10	SLINGER- MIXER	051494
11	SWITCH- ROCKER- MIXER	051488
12	LABEL- MIXER- COUNTER- RAZZLE	052250
13	PEDAL- FOOT- MIXER- 120V	052451
	PEDAL- FOOT- MIXER- 220V	053192
13a	TRANSMITTER FOOT PEDAL	052451- 1
13b	CONTROLLER- FOOT PEDAL- 115V	052451- 2
	SWITCH- PRESSURE- FOOT PEDAL- 220	053192- 1
13c	TUBE - AIR - FOOT PEDAL	052451- 3

BC10 - Unit Equipped With Timer

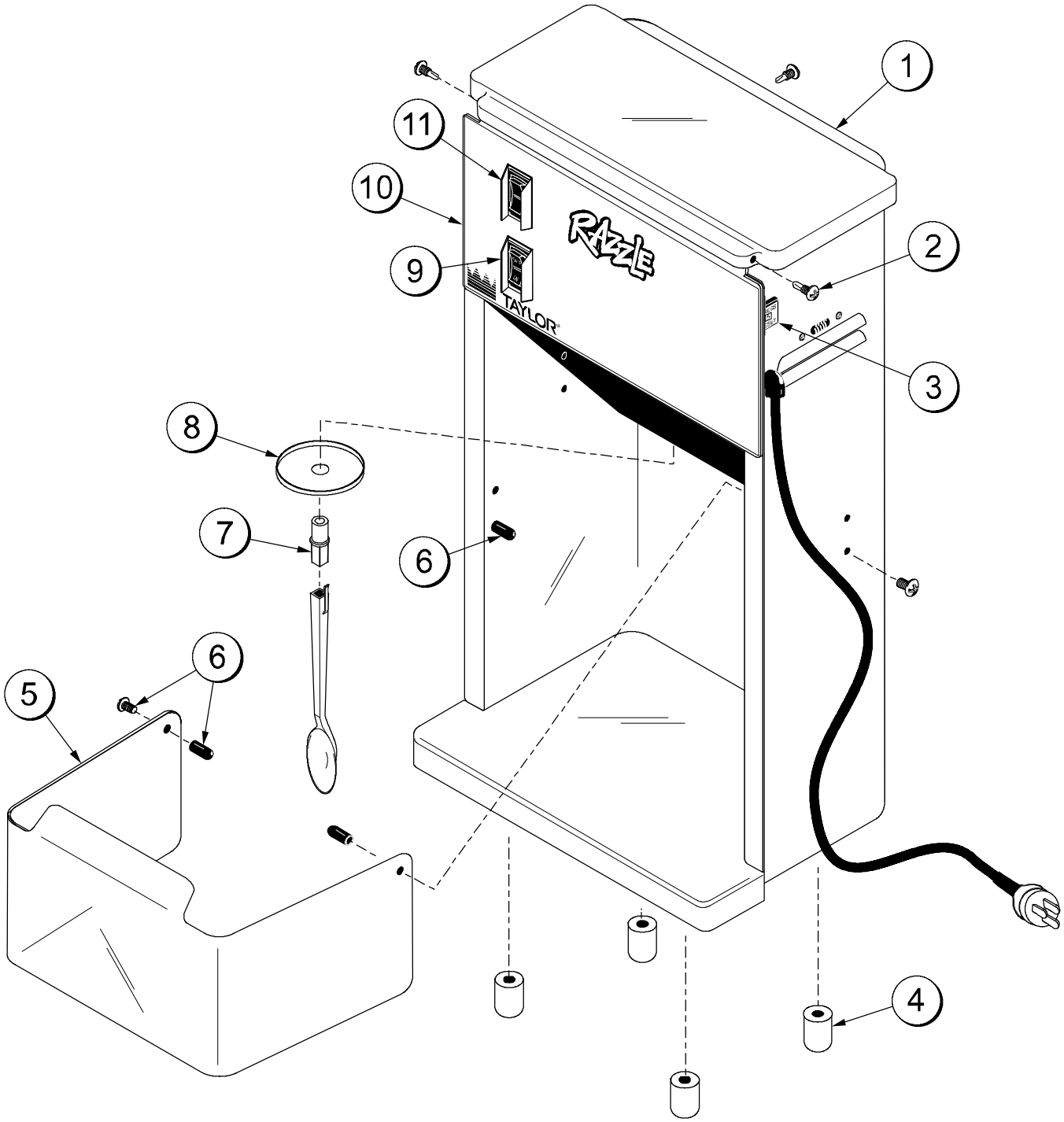

130529

BC10 Unit Equipped With Timer - Exploded View Parts Identification

ITEM	DESCRIPTION	PART NO.
1	CAP- MIXER	051484
2	SCREW- MIXER- RETAINER CAP	051487
3	BREAKER- CIRCUIT- MIXER- 5A 220/240V	051490
4	FOOT A.- MIXER- PLUGGED- PKG OF 4	051500
5	GUARD- SPLASH- MIXER	051499
6	PIVOT PIN&SCREW*PKG OF 4	051507

ITEM	DESCRIPTION	PART NO.
7	SHAFT- DRIVEN SPINNER- MIXER	051436
8	SLINGER- MIXER	051494
9	SWITCH- ROCKER- LIGHTED	067643- 40
10	LABEL- MIXER- COUNTER- RAZZLE	052250
11	SWITCH- PUSHBUTTON- MOMENTARY (START BUTTON)	054699

BW11 - Standard Unit

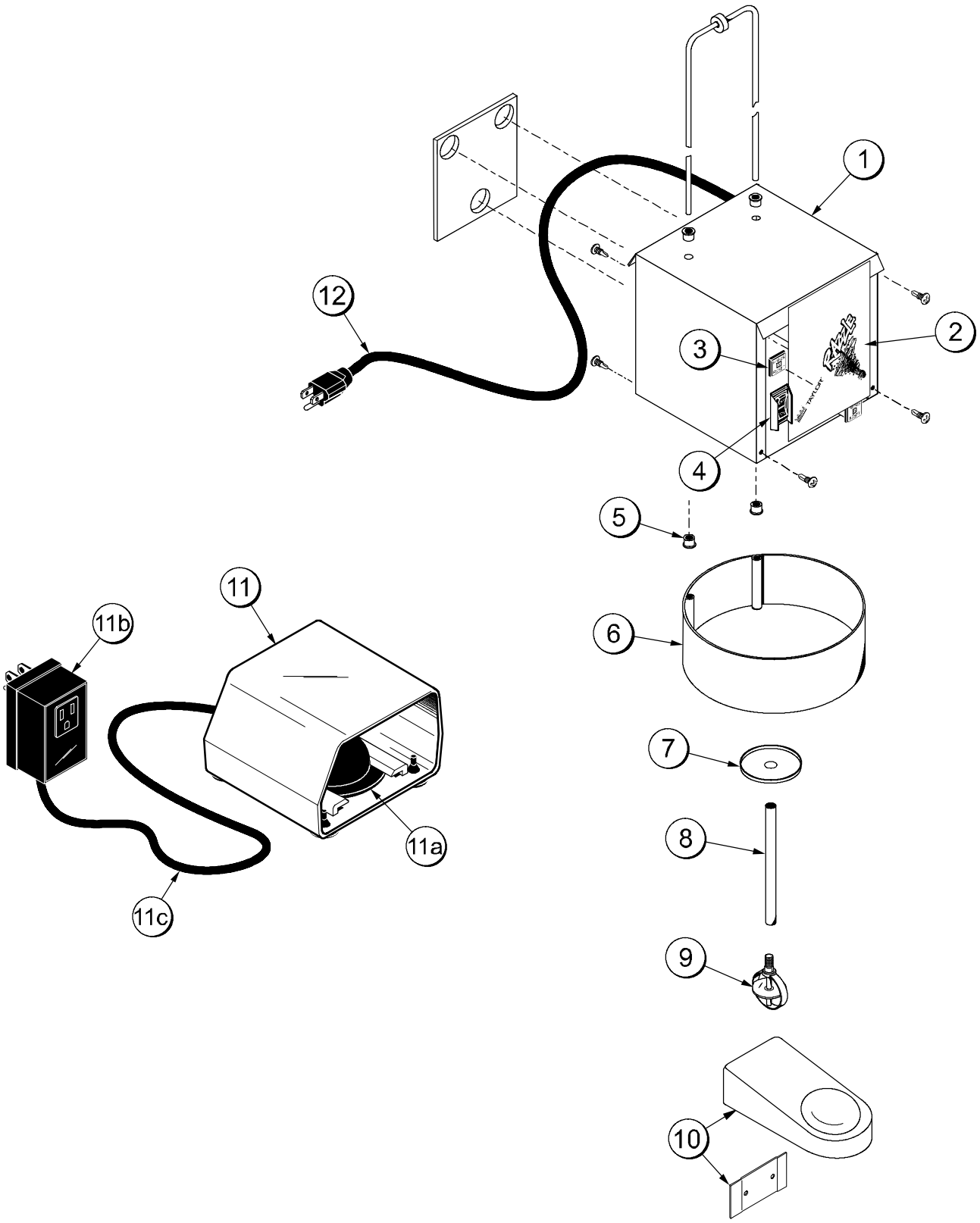

130524

BW11 Standard Unit - Exploded View Parts Identification

ITEM	DESCRIPTION	PART NO.
1	COVER- MIXER- TOP WALL MT	051516
2	LABEL- MIXER- WALL- FRONT/ SIDE - 3	052251
3	BREAKER- CIRCUIT- MIXER- 3A 120V	051489
	BREAKER- CIRCUIT- MIXER- 5A 220/240V	051490
4	SWITCH- ROCKER- MIXER	051488
5	BUSHING- MIXER- TRAVEL ROD	051522
6	GUARD- SPLASH- MIXER- CUP- WALL MOUNT	051518
7	SLINGER- MIXER	051494
8	SHAFT- MIXER- AGITATOR- EXT - WALL MOUNT	051520

ITEM	DESCRIPTION	PART NO.
9	AGITATOR- MIXER- PERM SOFT SERVE	051497
10	KIT- DRIP PAN- BW11	052429
11	PEDAL- FOOT- MIXER- 120V	052451
	PEDAL- FOOT- MIXER- 220V	053192
11a	TRANSMITTER- FOOT PEDAL	052451- 1
11b	CONTROLLER- FOOT PEDAL- 115V	052451- 2
	SWITCH- PRESSURE- FOOT PEDAL- 220V	053192- 1
11c	TUBE- AIR- FOOT PEDAL	052451- 3
12	CORD- MIXER- 18/3 GROUNDED W/PLUG	051491

Accessories

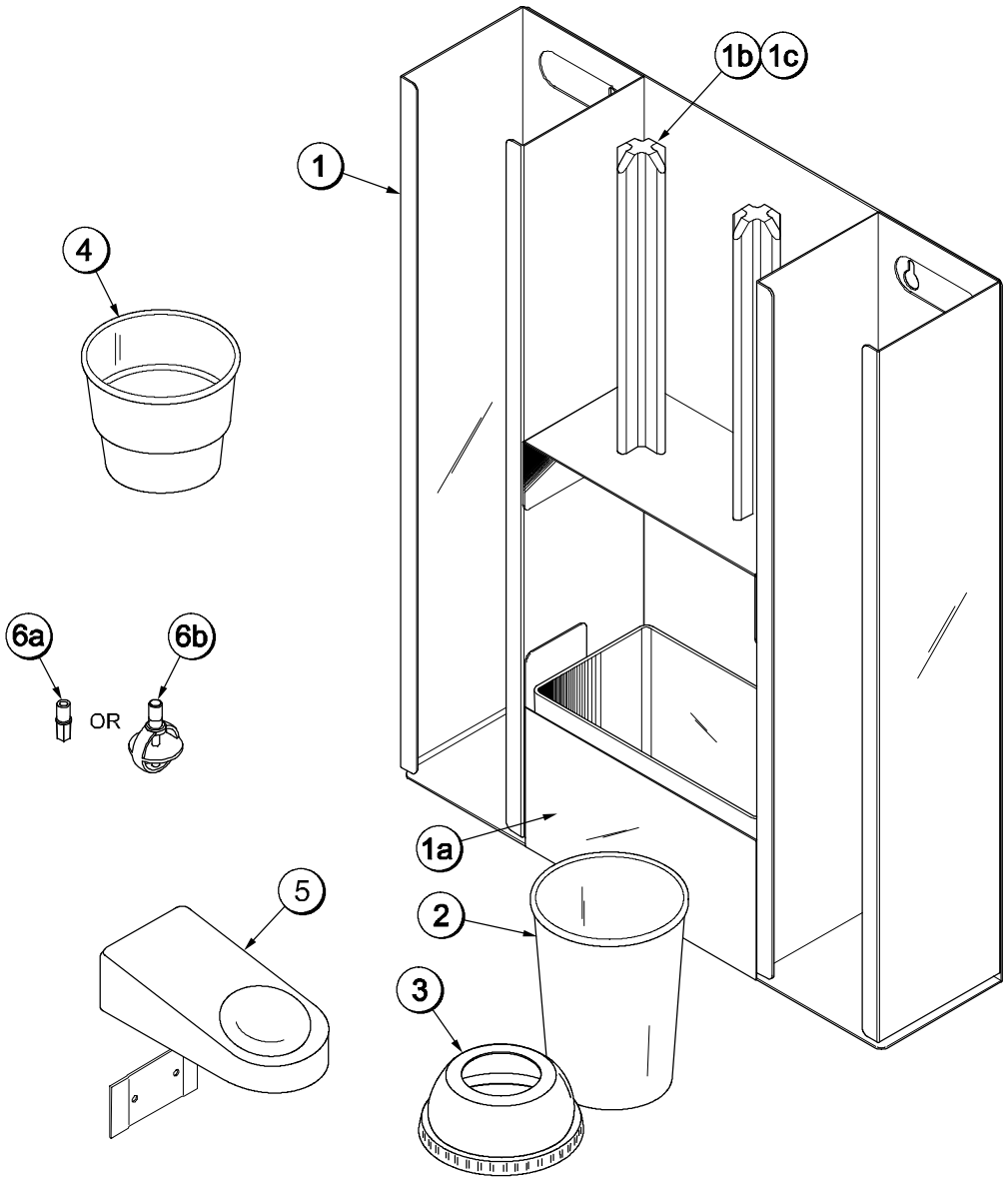

ITEM	DESCRIPTION	PART NO.
1	ORGANIZER A.- CUP/LID	X52080
1a	INSERT- SPOON BIN	052113
1b	COLUMN- LID DISPENSER	052084
1c	SCREW- 1/4 X 1 HEX HEAD	052139
2	CUP 12 OZ RAZZLE 1000/CS	051967
	CUP 16 OZ RAZZLE 1000/CS	051968
3	LID RAZZLE CLEAR DOME 1200/CS	051969

ITEM	DESCRIPTION	PART NO.
4	COLLAR- PLASTIC	051750
5	KIT- DRIP PAN	052429
6a	SHAFT- DRIVEN SPOON MIXER	051436
6b	AGITATOR- MIXER- PERMANENT SOFT SERVE	051497
*6c	AGITATOR- MIXER- PERMANENT HARD SERVE	051498

*NOT SHOWN

Optional Dispensers

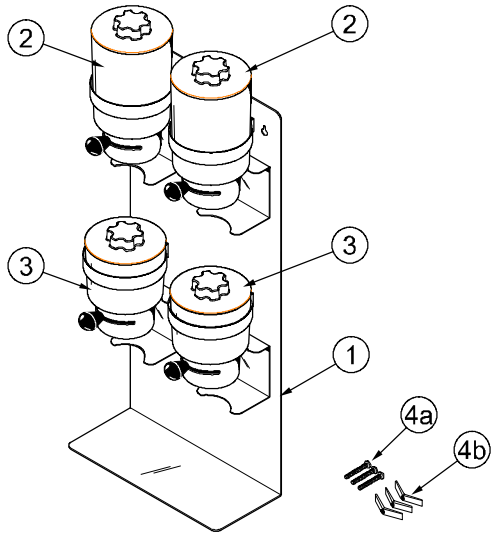

X52037-1

Item	Description	Part No.
	Dispenser A.-2 Large - 2 Small	X52037-1
1	Bracket A.-Wall Mount	X52035
2	Canister A.-Large (2)	X53638-1
3	Canister A.-Small (2)	X53638-2
4	Kit A.-Dispenser-Wall Mount	X52039
4a	Screw-10-24 x 2 Sltd Pan Hd SS	051443
4b	Anchor-Toggle Wing Zinc Plated	051444
4c*	Template-Dispenser-Wall Mount	052041-T

*Not Shown

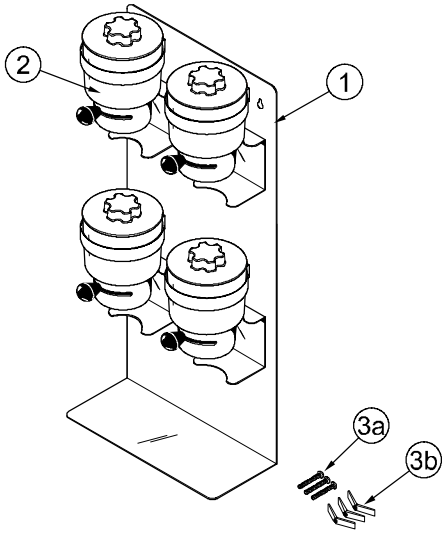

X52037-2

Item	Description	Part No.
	Dispenser A.-4 Small (Wall Mt.)	X52037-2
1	Bracket A.-Wall Mount	X52035
2	Canister A.-Small (4)	X53638-2
3	Kit A.-Dispenser-Wall Mount	X52039
3a	Screw-10-24 x 2 Sltd Pan Hd SS	051443
3b	Anchor-Toggle Wing Zinc Plated	051444
3c*	Template-Dispenser-Wall Mount	052041-T

*Not Shown

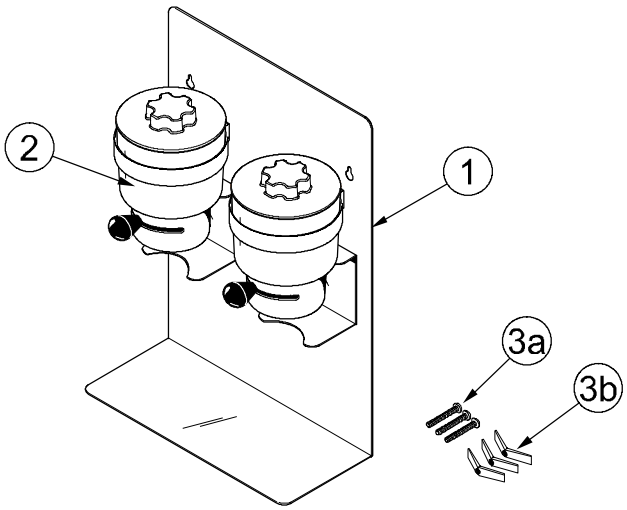

X52078-1

Item	Description	Part No.
	Dispenser A.- 2 Small (Wall/Counter Mount)	X52078- 1
1	Bracket A.- Wall/Counter Mt.	X51414
2	Canister A.-Small (2)	X53638- 2
3	Kit A.- Dispenser- Wall/Counter Mt.	X51441
3a	Screw- 10- 24 x 2 Sltd Pan Hd (3)	051443
3b	Anchor- Toggle Wing Zinc (3)	051444
3c*	Template- Dispenser- Wall Mt.	051415- T

*Not Shown

Optional Dispensers *(Cont'd.)*

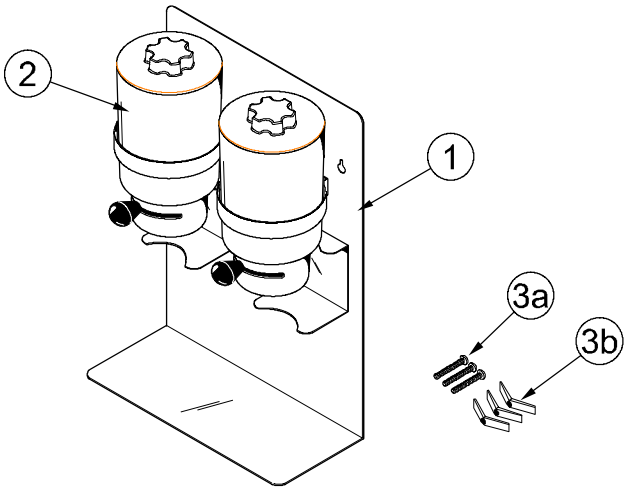

X52078-2

Item	Description	Part No.
	Dispenser A.-2 Large (Wall/Counter Mount)	X52078-2
1	Bracket A.-Wall/Counter Mt.	X51414
2	Canister A.-Large (2)	X53638-1
3	Kit A.-Dispenser-Wall/Counter Mt.	X51441
3a	Screw- 10- 24 x 2 Sltd Pan Hd (3)	051443
3b	Anchor- Toggle Wing Zinc (3)	051444
3c*	Template- Dispenser- Wall Mt.	051415- T

*Not Shown

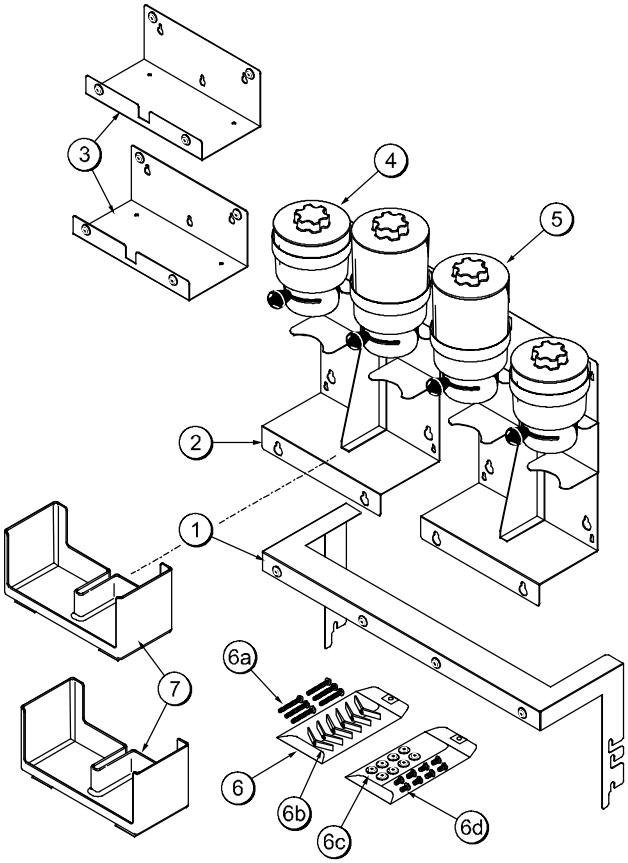

X52566-1

Item	Description	Part No.
	Dispenser A.-2 Large - 2 Small (Hood/Counter/Wall Mount)	X52566-1
1	Bracket A.-Hood Mount	X52559
2	Bracket A.-Splitback	X52556
3	Bracket A.-Counter/Wall Mt. (2)	X52618
4	Canister A.-Small (2)	X53638-1
5	Canister A.-Large (2)	X53638-2
6	Kit A.-Dispenser-Counter/Wall Mt	X52567
6a	Screw-10-24 x 2 Sltd Pan Hd (6)	051443
6b	Anchor-Toggle Wing Zinc (6)	051444
6c	Collar-Holding (8)	046551
6d	Screw-10-32 x 1/2 Oval Hd (8)	001251
7	Tray A.-Hood Mount (2)	X53773
8*	Instruction-Dispenser	X52566-INS

*Not Shown

Optional Dispensers *(Cont'd.)*

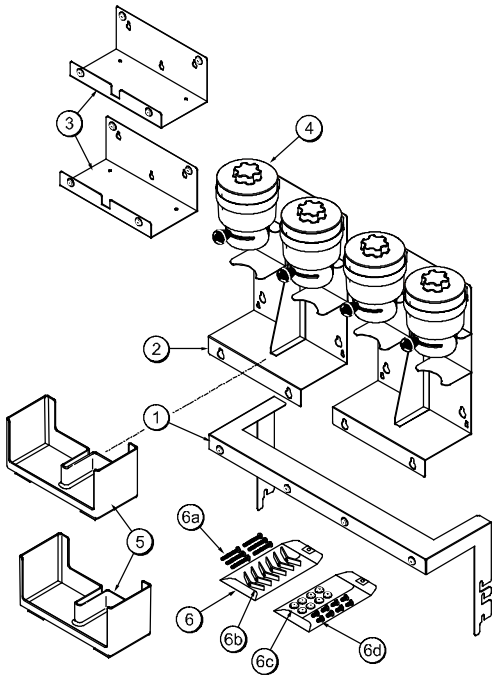

X52566-2

Item	Description	Part No.
	Dispenser A.-4 Small (Hood/Counter/Wall Mount)	X52566-2
1	Bracket A.-Hood Mount	X52559
2	Bracket A.-Splitback (2)	X52556
3	Bracket A.-Counter/Wall Mt (2)	X52618
4	Canister A.-Small (4)	X53638-2
5	Tray A.-Hood Mount (2)	X53773
6	Kit A.-Dispenser-Counter/Wall Mt	X52567
6a	Screw-10-24 x 2 Sltd Pan Hd (6)	051443
6b	Anchor-Toggle Wing Zinc (6)	051444
6c	Collar-Holding (8)	046551
6d	Screw-10-32 x 1/2 Oval Hd-NP (8)	001251
7*	Instruction-Dispenser	X52566-INS

*Not Shown

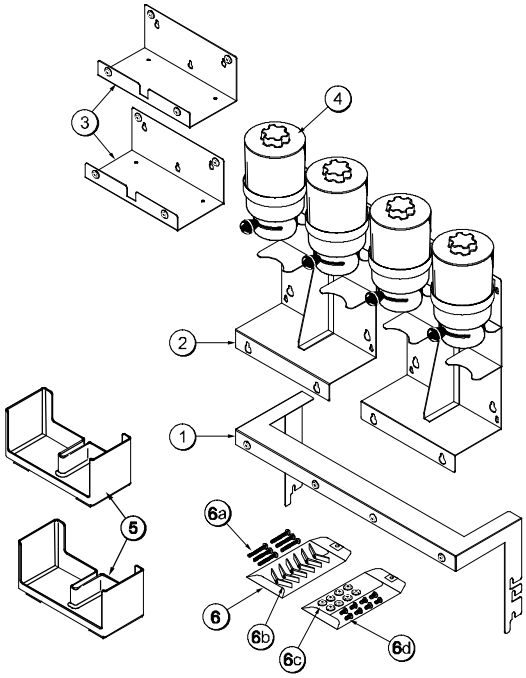

X52566-3

Item	Description	Part No.
	Dispenser A.-4 Large (Hood/Counter/Wall Mount)	X52566-3
1	Bracket A.-Hood Mount	X52559
2	Bracket A.-Splitback (2)	X52556
3	Bracket A.-Counter/Wall Mt (2)	X52618
4	Canister A.-Large (4)	X53638-1
5	Tray A.-Hood Mount (2)	X53773
6	Kit A.-Dispenser-Counter/Wall Mt	X52567
6a	Screw-10-24 x 2 Sltd Pan Hd (6)	051443
6b	Anchor-Toggle Wing Zinc (6)	051444
6c	Collar-Holding (8)	046551
6d	Screw-10-32 x 1/2 Oval Hd (8)	001251
7*	Instruction-Dispenser	X52566-INS

*Not Shown

Optional Dispensers *(Cont'd.)*

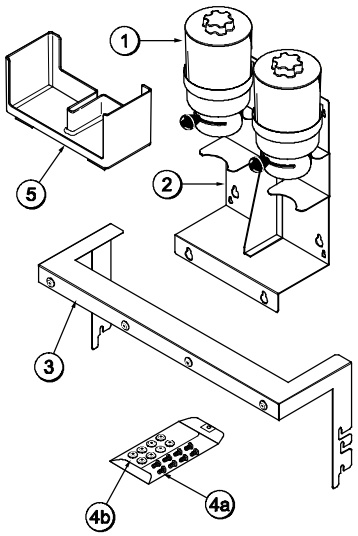

X52566-5

Item	Description	Part No.
	Dispenser A.-2 Large (Hood Mount Only)	X52566-5
1	Canister A.-Large (2)	X53638-1
2	Bracket A.-Splitback (1)	X52556
3	Bracket A.-Hood Mount	X52559
4	Kit A.-Dispenser-Counter/Wall Mt	X52567-4
4a	Screw-10-32 x 1/2 Oval Hd (8)	001251
4b	Collar-Holding (8)	046551
5	Tray A.-Hood Mount	X53773
6*	Instruction-Dispenser	X52566-INS

*Not Shown

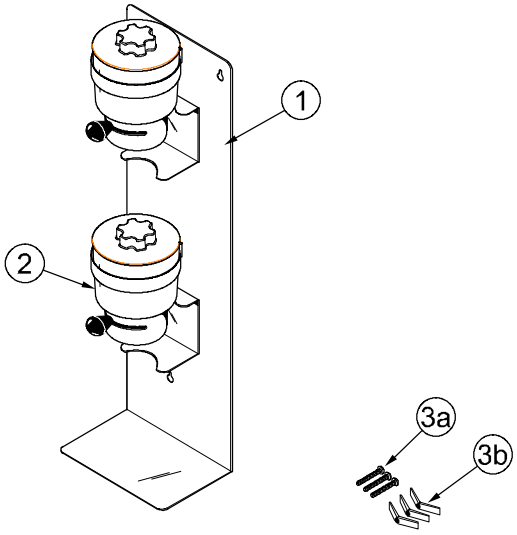

X53407-1

Item	Description	Part No.
	Dispenser A.-2 Small -Vertical (Wall Mount Only)	X53407-1
1	Kit A.-Vertical Wall Mount	X53460
2	Canister A.-Small (2)	X53638-2
3	Kit A.-Vertical Wall Mount	X53461
3a	Screw-10-24 x 2 Sltd Pan Hd (3)	051443
3b	Anchor-Toggle Wing Zinc (3)	051444
3c*	Template-Dispenser-Wall Mt.	053462-T

*Not Shown

Optional Dispensers *(Cont'd.)*

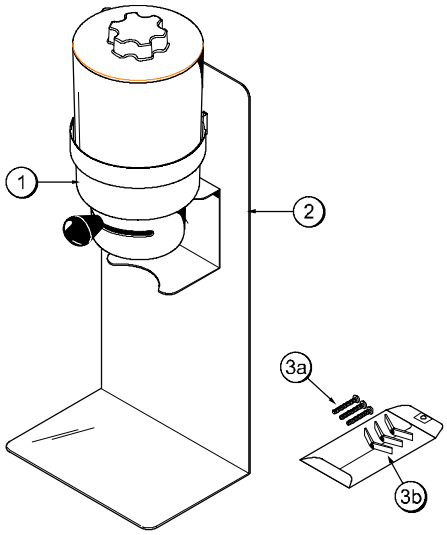

X53492-1

Item	Description	Part No.
	Dispenser A.-1 Large - Vertical (Wall Mount Only)	X53492-1
1	Canister A.-Large (1)	X53638-1
2	Bracket A.-Vertical Wall Mount	X53488
3	Kit A.-Dispenser-Wall Mount	X53490
3a	Screw-10-24 x 2 Sldt Pan Hd (3)	051443
3b	Anchor-Toggle Wing Zinc (3)	051444
3c*	Template-Single Canister-Wall Mt	053491-T

*Not Shown

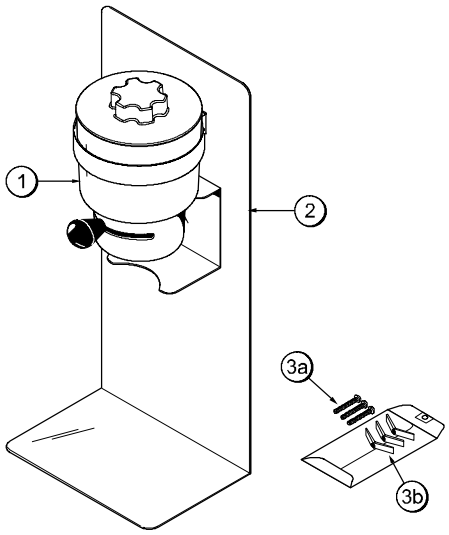

X53492-2

Item	Description	Part No.
	Dispenser A.-1 Small - Vertical (Wall Mount Only)	X53492-2
1	Canister A.-Small (1)	X53638-2
2	Bracket A.-Vertical Wall Mount	X53488
3	Kit A.-Dispenser-Wall Mount	X53490
3a	Screw-10-24 x 2 Sldt Pan Hd (3)	051443
3b	Anchor-Toggle Wing Zinc (3)	051444
3c*	Template-Single Canister-Wall Mt	053491-T

*Not Shown

Optional Large Candy Dispenser Canister Assembly (X53638- 1)

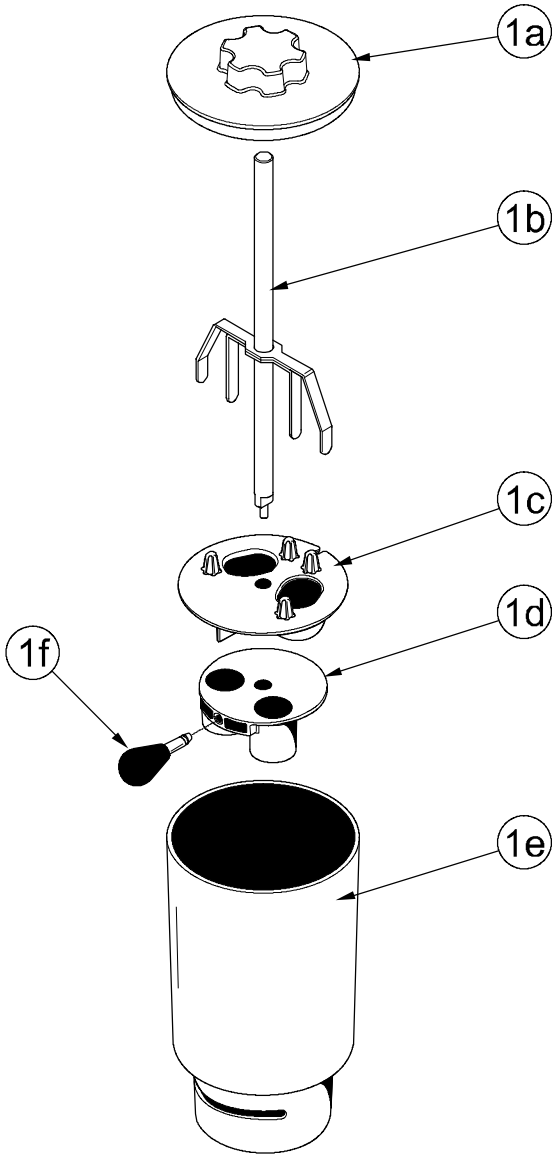

ITEM	DESCRIPTION	PART NO.
1	CANISTER A.- LARGE CANDY DISP.	X53638- 1
1a	COVER- CANDY DISPENSER- LARGE	052032- 1
1b	SHAFT A.- LONG W/AGITATORS	X53530- 1
1c	PLATE- ANTI- ROTATION INS. W/POST	053581

ITEM	DESCRIPTION	PART NO.
1d	PUCK A.- CANDY DISPENSER	X52027
1e	CANISTER- CANDY DISPENSER- LG.	052033- 1
1f	KNOB A.- CANDY DISPENSER	X51564

Optional Small Candy Dispenser Canister Assembly (X53638-2)

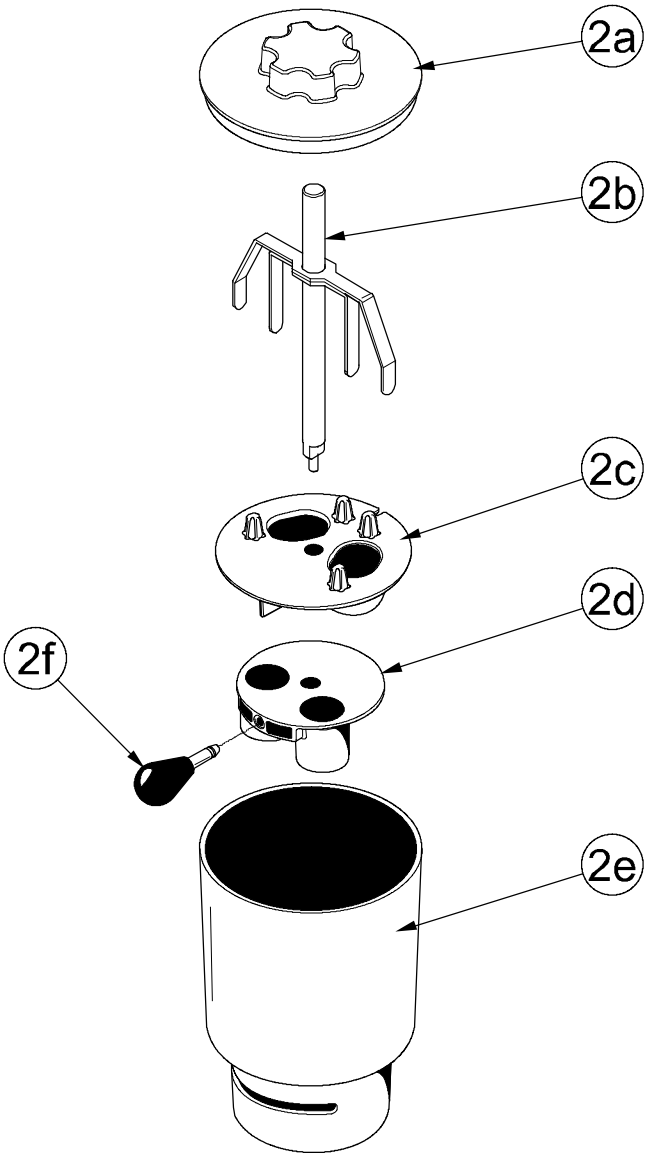

ITEM	DESCRIPTION	PART NO.
2	CANISTER A.- SM. CANDY DISP. (2)	X53638-2
2a	COVER- CANDY DISPENSER- SMALL	052032-2
2b	SHAFT A.- SHORT W/AGITATORS	X53530-2
2c	PLATE- ANTI- ROTATION INS. W/POST	053581

ITEM	DESCRIPTION	PART NO.
2d	PUCK A.- CANDY DISPENSER	X52027
2e	CANISTER- CANDY DISPENSER- SM.	052033-2
2f	KNOB A.- CANDY DISPENSER	X51564

Section 5 Important: To the Operator

On/Off Switch

The On/Off switch is a rocker switch located on the front of the machine. It controls the power to the machine.

Units Not Equipped With Foot Pedal or Timer: The On/Off switch is used to activate the agitator for blending.

Foot Pedal or Timer Equipped Units: The On/Off switch is placed in the ON position to ready the machine for blending. The switch is placed in the OFF position at the end of the day or whenever the machine will be left unattended.

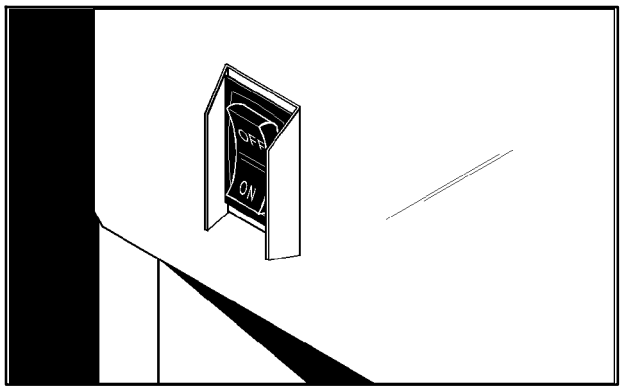

Figure 1

Start Switch

(Timer Equipped Units, Only)

The Start switch (Momentary Pushbutton Switch) is located on the front of the machine above the On/Off switch. With the On/Off switch in the ON position, pressing the Start switch activates the agitator and begins a pre-set timed blending cycle. The agitator will stop automatically at the end of the blending cycle.

Foot Pedal

Standard units may be equipped with an optional foot pedal. The foot pedal allows hands- free activation of the agitator and allows the operator to use both hands to mix the product. Press and hold the switch to activate the agitator. Release the switch to stop the agitator.

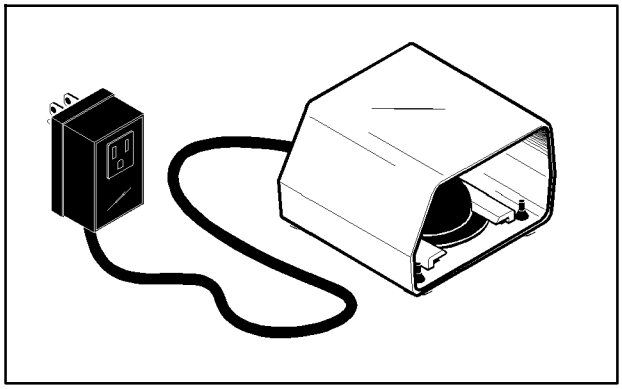

Figure 2

Reset Switch

The Model BC10 reset switch is located on right side panel. The Model BW11 reset switch is located on the front panel. The reset switch protects the motor from an overload condition. If an overload occurs, the reset mechanism will trip. To properly reset the unit, place the On/Off switch in the OFF position. Allow the motor to cool down for a few minutes. Press the reset switch. Place the On/Off switch in the ON position and resume operation.

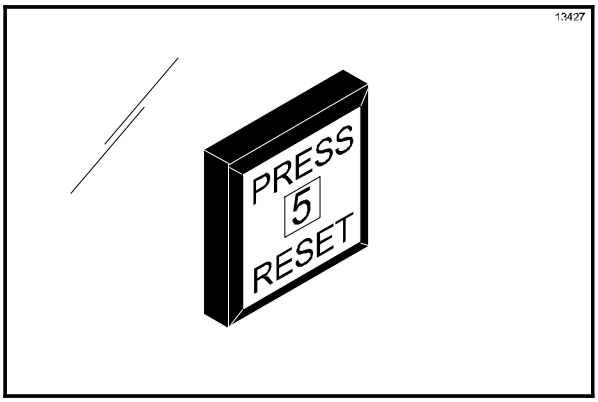

Figure 3

Splash Guard

The splash guard functions as a built- in cup limiter which protects the cups from agitator penetration. The splash guard also helps keep the inside of the housing clean.

The splash guard for the Model BC10 (counter- top) slides up and down on stainless steel rods. The splash guard for the Model BW11 (wall mount) rotates upward for easy operation.

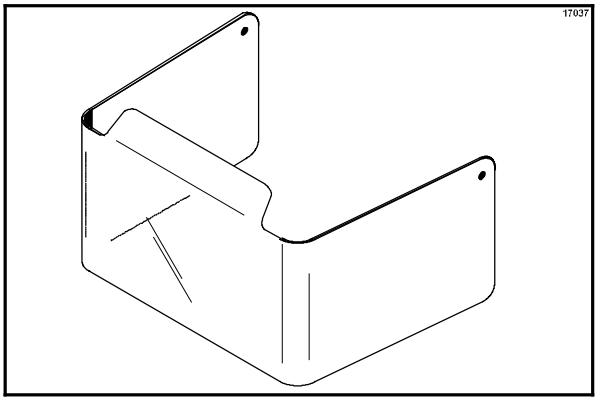

Figure 4

Motor

The motor features a heavy duty, ball bearing induction motor and does not use brushes, belts, couplings, or gears. This design reduces power consumption, heat, noise, and wear. The motor maintains an optimal speed of 3,485 RPM to maintain product consistency.

Agitators

Permanent Agitator

Material: NSF accepted Acetal

The non- metal permanent agitator can be carefully pushed up against the inside of the paper or plastic cups with no damage to the cup.

IMPORTANT: The shaft must be cleaned between servings as product carryover will occur.
(See page 26 for cleaning instructions.)

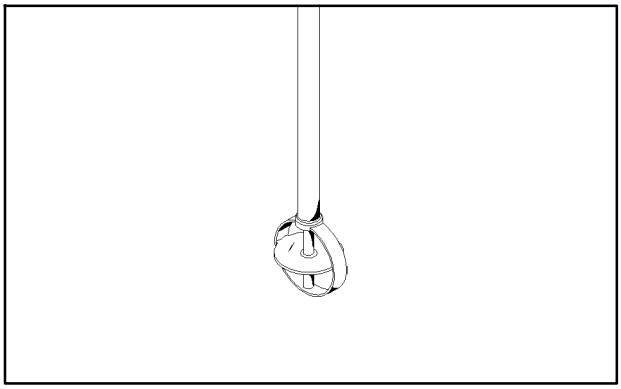

Figure 5

Removable Spoon Agitator

Material: NSF accepted Eastman Tritan™

The non- metal single serve agitator/spoon clips onto the machine for mixing and removal for use as a serving spoon. The spoon agitator increases the speed of service and prevents flavors, colorings, and potential allergens from being transferred from serving to serving, while not damaging paper or plastic cups during processing.

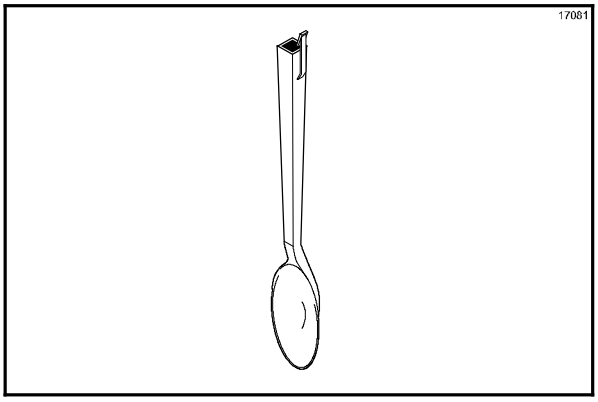

Figure 6

Candy Dispenser Canisters

The canisters contain the candy toppings. The operator dispenses the toppings by use of the dispenser handle.

Candy Care

Most candies have a tendency to “clump” or “cluster” under various conditions. This can lead to broken dispensing pucks if excessive pressure is required to move the handle.

- Store candies in the proper ambient conditions according to the manufacturer’s directions. Avoid excessively hot and humid locations.
- Avoid opening a bag of candy if the entire contents cannot be poured into the canister. If this cannot be avoided, be sure to fold the bag opening over and reseal it with a bag clip. Store it in a cool, dry place until needed again.
- Rotate the candy stock to use the oldest candy first (First in- First- out).
- Before opening a new bag of candy, check to see if it contains large clumps by slightly squeezing the bag. If clumps exist, gently break them apart with your fingers prior to opening the bag.

Canister Care and Location

- Avoid mounting canisters near heat, humidity, or hot air discharges. These conditions can promote clumping and difficult dispensing of candies.
- Always keep candies protected from the open ambience by having the lids properly installed on top of the canisters when candies are present.
- When canisters are not cleaned daily, candy dust and powers begin to congeal and will cause excessive pressure to be exerted in order to dispense candies. This additional pressure can cause the pucks to break.
- Avoid “slamming” the dispensing handle back and forth when dispensing candies. This can cause the puck to break.
- Do not apply undue force on the handle to make the puck move. If a “lock up” condition occurs, empty the dispenser of candies. Disassemble, clean and thoroughly dry the dispenser according to cleaning instructions. Eliminate clusters and clumps before refilling the canister.
- When reassembling the canister, take care not to over- tighten the handle into the “puck bushing”. After the handle has been screwed into the puck bushing, check tightness by unscrewing it slightly to be sure it requires little effort to unscrew. Then reseat it.

Mixing Instructions

IMPORTANT: Make sure your hands are clean and sanitized before performing these steps.

Step 1
Fill a serving cup with soft serve product and install the plastic domed lid.

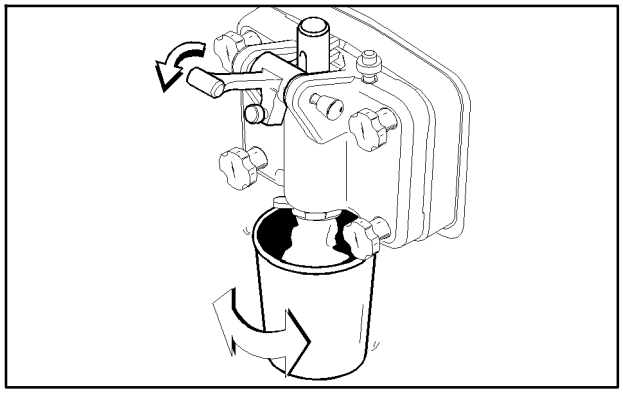

Figure 7

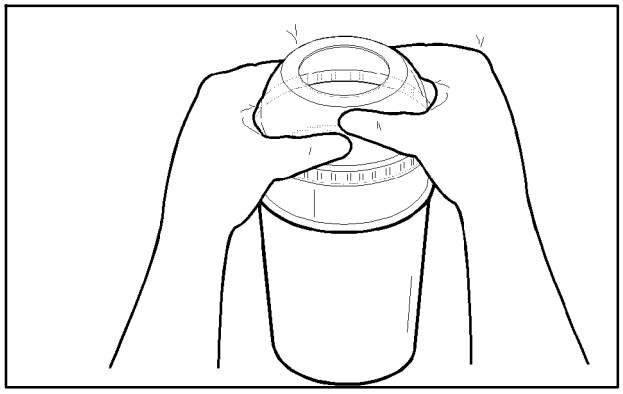

Figure 8

Step 2
Add “mix- in” ingredients such as liquid flavoring, candy, cookies, fruit, or other condiments.

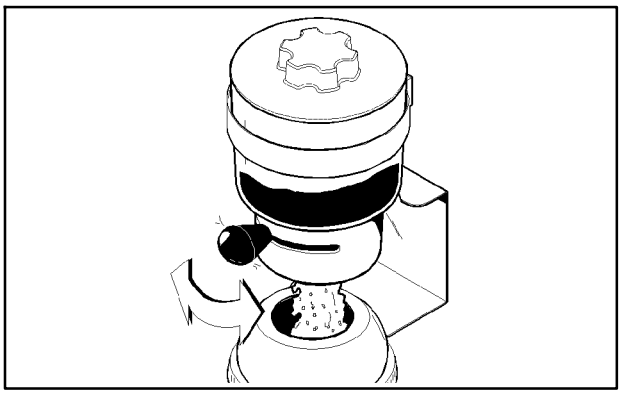

Figure 9

Step 3
For units using the spoon agitator, slide the agitator onto the agitator shaft until it snaps into place.

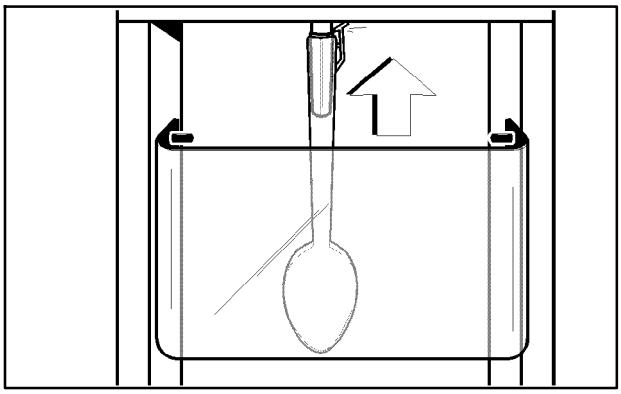

Figure 10

Step 4
Hold the cup securely in your hands (from the side, not from the bottom) and move the cup under the agitator.

Step 5
Position the cup so the agitator makes slight contact with the bottom of the cup.

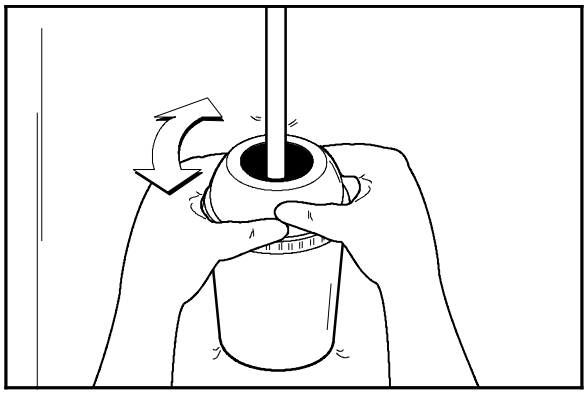

Figure 11

Step 6
Activate the agitator. Follow the instructions below based on the specific model:

Standard Unit Without Foot Pedal: Place the On/Off switch in the ON position.

Standard Unit With Foot Pedal: With the On/Off switch in the ON position, step on the foot pedal switch.

Unit Equipped With Timer: With the On/Off switch in the ON position, press the Start switch.

Step 7
Using a circular motion, work the cup upward and over the spinning agitator.

Note: Agitation will chip and break down solids. It is not intended to completely pulverize ingredients. Solid chunks should be evident in the finished product.

CAUTION: Both the permanent agitator and the spoon agitator are designed to withstand reasonable contact with the spinning agitator shaft. However, it should not be forced or held solidly against the side or bottom of the cup. This may cause damage to the cup or components.

Step 8
After about 10 seconds have elapsed, slowly remove the cup by “swirling” it around the agitator. This will create an effect that is pleasing to the eye and avoids leaving a hole in the center of the product.

Step 9
Before removing the cup completely, hold the top edge of the cup near the spinning agitator to allow excess mixture to be projected into the cup or the mix- through collar.

Step 10
Deactivate the agitator. Follow the instructions below based on the specific model:

Standard Unit Without Foot Pedal: Place the On/Off switch in the OFF position.

Standard Units With Foot Pedal: Release the foot pedal.

Unit Equipped With Timer: The machine stops automatically at the end of the blending cycle.

Step 11
Serve the product. If using spoon agitator, remove the spoon from the agitator shaft. Serve the product with the spoon in the cup.

Note: Spoon agitators should be used only once.

Step 12
Permanent Agitators, Only: Prepare a durable square or rectangular container, filling it to within 1 inch (30 mm) from the top with an approved cleaning solution. The container must be deep enough to submerge the entire agitator and shaft. USE WARM WATER (110°F/43°C) AND FOLLOW THE MANUFACTURER’S SPECIFICATIONS. Do not use a solution that contains ammonia.

Submerge the agitator in the cleaning solution all the way to the bottom of the motor chamber. Activate the agitator and allow it to run for about 15 seconds. Repeat this step several times, making certain all portions of the agitator and shaft have been submerged in the cleaning solution.

Repeat this step using cool, clean water instead of cleaning solution.

WARNING: Never try to wipe clean the agitator while it is active. Failure to follow these instructions can lead to severe personal injury from hazardous moving parts, or damage to the unit.

Daily Cleaning

Taylor recommends daily cleaning.

ALWAYS FOLLOW LOCAL HEALTH CODES

Step 1
Prepare a sink with an approved cleaning/sanitizing solution with an active chlorine concentrate of 100 - 200 PPM (parts per million). USE WARM WATER (110°F/43°C) AND FOLLOW THE MANUFACTURER'S SPECIFICATIONS. Do not use a solution that contains ammonia and avoid placing components in a dishwasher.

Note: Follow label directions, as too STRONG of a solution can cause parts damage, while too MILD of a solution will not provide adequate cleaning. Make sure all brushes provided with the freezer are available for brush cleaning.

Step 2

Disconnect power from the wall receptacle. Failure to comply may result in electrical shock.

Step 3
Remove the splash guard.

Wall mount units only (BW11): Remove the sliding splash guard cup by squeezing the travel rods together and sliding the guard downward. Take the cup to the sink for cleaning.

Step 4
Wash the splash guard in the approved cleaning solution.

Step 5
Using a single service towel moistened with the cleaning solution, wipe clean the travel rods and the agitator shaft.

CAUTION: DO NOT REMOVE THE TRAVEL RODS FROM THE UNIT.

Step 6
Remove the dispenser from the bracket by tilting it toward you and lifting upward.

Step 7
Discard any remaining topping.

Step 8
Remove the cover, shaft, dispensing plate, and dispensing puck. Unscrew the handle from the dispensing puck.

Step 9
Check all parts for cracks and damage, especially the puck. Replace damaged parts immediately.

Step 10
Wash all plastic parts in the approved cleaning solution. **CAUTION: PLASTIC PARTS ARE NOT DISHWASHER SAFE! HAND WASH ONLY!**

Step 11
Re-assemble the dispenser. Make sure the dispensing puck is placed in the canister with the counterbore face down and the threaded insert facing the slot.

Note: Parts must be dry prior to assembling and refilling them with mix ingredients.

Step 12
Screw the handle through the slot and into the metal insert in the dispensing puck. Place the dispensing plate on top of the dispensing puck.

Step 13
Position the shaft through the plate and into the slot in the dispensing puck. Make certain the shaft is properly seated.

Step 14
Install the dispenser. Place the dispenser on the wall bracket with the locating pin facing the holding bracket. The dispenser must be tilted toward the operator to clear the handle. Insert the pin into the hole in the bracket.

Note: When loading the dispenser with product, keep powder away from the top of the shaft. Fill the canister only within one inch of the top. **Do not overfill the canister.**

Step 15
Wipe clean all stainless steel surfaces with an approved, non- abrasive commercial cleaner. This includes the mixer, dispenser, and organizer surfaces.

WARNING: Do not spray water or other liquid around the motor chamber. Do not use excess liquid around the switch, motor protector, power cords, or cord entry orifice. Make certain all areas in and around the motor are dry before connecting power to the wall receptacle. **Failure to comply may cause equipment damage or personal injury due to electric shock.**

Step 16
When foot pedal cleaning is required, disconnect it and wipe it with a damp single service towel. Make sure the foot pedal is thoroughly dry before re- connecting it to the unit.

CAUTION: The foot pedal should be kept dry. Do not leave it on the floor during mopping. Failure to comply may result in electrical shock.

Permanent Agitator Cleaning

Step 1
Prepare a durable container with an approved cleaning/sanitizing solution with an active chlorine concentrate of 100 - 200 PPM (parts per million). USE WARM WATER (110°F/43°C) AND FOLLOW THE MANUFACTURER'S SPECIFICATIONS. Do not use a solution that contains ammonia.

Note: The container must be deep enough to submerge the entire agitator and shaft.

Step 2
Submerge the agitator in the cleaning solution, all the way to the bottom of the motor chamber. Activate the agitator and alllow it to run for about 15 seconds. Repeat this step several times, making certain all portions of the agitator and shaft have been submerged in the cleaning solution.

WARNING: Never try to wipe clean the agitator while it is active. Failure to follow these instructions can lead to severe personal injury from hazardous moving parts, or damage to the unit.

Step 3
Repeat Step 2 using cool, clean water instead of cleaning solution.

Sanitizing

Step 1
Repeat all steps of the cleaning procedure using an approved cleaning/sanitizing solution with an active chlorine concentrate of 100 - 200 PPM (parts per million). USE WARM WATER (110°F/43°C) AND FOLLOW THE MANUFACTURER'S SPECIFICATIONS.

Step 2
Reinstall the splash guard.

Step 3
Repeat the sanitizing procedures at the start of the day.

ALWAYS FOLLOW LOCAL HEALTH CODES

Section 7 Limited Warranty on Equipment

TAYLOR COMPANY LIMITED WARRANTY ON BLENDERS

Taylor Company, a division of Carrier Commercial Refrigeration, Inc. ("Taylor") is pleased to provide this limited warranty on new equipment available from Taylor (the "Product") to the original purchaser only.

LIMITED WARRANTY

Taylor warrants the Product against failure due to defect in materials or workmanship under normal use and service as follows. All warranty periods begin on the date of original Product installation. If a part fails due to defect during the applicable warranty period, Taylor, through an authorized Taylor distributor or service agency, will provide a new or re- manufactured part, at Taylor's option, to replace the failed defective part at no charge for the part. Except as otherwise stated herein, these are Taylor's exclusive obligations under this limited warranty for a Product failure. This limited warranty is subject to all provisions, conditions, limitations and exclusions listed below and on the reverse (if any) of this document.

Product	Limited Parts Warranty Period
Blenders	One (1) year

In addition, during the one (1) year period commencing on the date of original installation of blenders, Taylor will also provide, through an authorized Taylor distributor or service agency, all service needed to replace the failed defective part at no charge for the service. Local sales and use taxes may still apply and will be charged accordingly.

Except as otherwise stated herein, these are Taylor's exclusive obligations under this limited warranty for a Product failure. This limited warranty is subject to all provisions, conditions, limitations and exclusions listed below and on the reverse (if any) of this document.

LIMITED WARRANTY CONDITIONS

1. This limited warranty is valid only if the Product is registered with Taylor within thirty (30) days of installation.
2. This limited warranty is valid only if the Product is installed and all required service work on the Product is performed by an authorized Taylor distributor or service agency, and only if genuine, new Taylor parts are used.
3. Installation, use, care, and maintenance must be normal and in accordance with all instructions contained in the Taylor Operator's Manual.
4. Defective parts must be returned to the authorized Taylor distributor or service agency for credit.

LIMITED WARRANTY EXCEPTIONS

This limited warranty does **not** cover:

1. Except as otherwise specifically set forth in this limited warranty, labor or other costs incurred for diagnosing, repairing, removing, installing, shipping, servicing or handling of defective parts, replacement parts, or new Products.
2. Normal maintenance, cleaning and lubrication as outlined in the Taylor Operator's Manual.
3. Replacement of wear items designated as Class "000" parts in the Taylor Operator's Manual.
4. External hoses, electrical power supplies, and machine grounding.
5. Parts not supplied or designated by Taylor, or damages resulting from their use.
6. Return trips or waiting time required because a service technician is prevented from beginning warranty service work promptly upon arrival.

141203

7. Failure, damage or repairs due to faulty installation, misapplication, abuse, no or improper servicing, unauthorized alteration or improper operation or use as indicated in the Taylor Operator's Manual, including but not limited to the failure to use proper assembly and cleaning techniques, tools, or approved cleaning supplies.
8. Failure, damage or repairs due to theft, vandalism, wind, rain, flood, high water, water, lightning, earthquake or any other natural disaster, fire, corrosive environments, insect or rodent infestation, or other casualty, accident or condition beyond the reasonable control of Taylor; operation above or below the electrical or water supply specification of the Product; or components repaired or altered in any way so as, in the judgment of the Manufacturer, to adversely affect performance, or normal wear or deterioration.
9. Any Product purchased over the Internet.
10. Failure to start due to voltage conditions, blown fuses, open circuit breakers, or damages due to the inadequacy or interruption of electrical service.
11. Electricity or fuel costs, or increases in electricity or fuel costs from any reason whatsoever.
12. **ANY SPECIAL, INDIRECT OR CONSEQUENTIAL PROPERTY OR COMMERCIAL DAMAGE OF ANY NATURE WHATSOEVER.** Some jurisdictions do not allow the exclusion of incidental or consequential damages, so this limitation may not apply to you.

This limited warranty gives you specific legal rights, and you may also have other rights which vary from jurisdiction to jurisdiction.

LIMITATION OF WARRANTY

THIS LIMITED WARRANTY IS EXCLUSIVE AND IS IN LIEU OF ALL OTHER WARRANTIES, CONDITIONS AND/OR REMEDIES UNDER THE LAW, INCLUDING ANY IMPLIED WARRANTIES OR CONDITIONS OF MERCHANTABILITY OR FITNESS FOR A PARTICULAR PURPOSE. THE ORIGINAL OWNER'S SOLE REMEDY WITH RESPECT TO ANY PRODUCTS SHALL BE REPAIR OR REPLACEMENT OF DEFECTIVE COMPONENTS UNDER THE TERMS OF THIS LIMITED WARRANTY. ALL RIGHTS TO CONSEQUENTIAL OR INCIDENTAL DAMAGES (INCLUDING CLAIMS FOR LOST SALES, LOST PROFITS, PRODUCT LOSS, PROPERTY DAMAGES OR SERVICE EXPENSES) ARE EXPRESSLY EXCLUDED. THE EXPRESS WARRANTIES MADE IN THIS LIMITED WARRANTY MAY NOT BE ALTERED, ENLARGED, OR CHANGED BY ANY DISTRIBUTOR, DEALER, OR OTHER PERSON, WHATSOEVER.

LEGAL REMEDIES

The owner **must** notify Taylor in writing, by certified or registered letter to the following address, of any defect or complaint with the Product, stating the defect or complaint and a specific request for repair, replacement, or other correction of the Product under warranty, mailed at least thirty (30) days before pursuing any legal rights or remedies.

Taylor Company
a division of Carrier Commercial Refrigeration, Inc.
750 N. Blackhawk Blvd.
Rockton, IL 61072, USA