Culinaire

Technical Data Sheet

CH.BM.D.GDD.3

Bain Marie

Heated

Drop-in with Double Gantry & Heat Lamps

Product Information:

- Unit comes complete with **CH.BM.U** bain marie plus drop-in bench top and double overhead heated gantry fully fitted and wired. Gantry is welded to bench top
- Adjustable digital temperature controller allows food to be held between +65°C to +90°C (food must be heated above 65°C before being placed in the bain marie)
- Wet or dry operation (temperature varies greatly when run dry, should not be left unattended for long periods of time)
- Suits gastronorm pans up to 150mm deep (sold separately)
- This display is designed to be installed into a cut out in a new or existing bench top which allows for simple, inexpensive installation
- Gantry constructed from 304 grade stainless steel with a No.4 finish
- 2 tier overhead gantry comes in either single heated (GDB - heat lamps to bottom level) or double heated (GDD - heat lamps to top and bottom levels)
- Overhead Quartz IR heat lamps provide heat and illumination to the product below
- Individual On/Off switches to operate bain marie and overhead gantry heat lamps
- Overhead heat lamps are fully adjustable via a solid-state voltage controller for accurate temperature selection

Product Code:

CH	= Culinaire Heated
BM	= Bain Marie
D	= Drop-in
GDD	= Double Shelf Gantry - 2 Tier Heated
3	= 3 Modules

Optional Extras:

Radius Well

- Add **R** to code after the .D	CH.BM.D**R**.GDD.3

(If Required, must be nominated at time of order)

Accessories:

Cross Pan Dividers

- To suit smaller GN pans	**CA.PXS**

Technical Data:

Dimensions: W x D x H:	1137 x 647 x 1034
Cutout Dimensions:	1115 x 625
Total Connected Load:	3.45kW
Electrical Connection:	240V 1Ø + N + E
Water Connection:	15mm
Waste Connection:	50mm

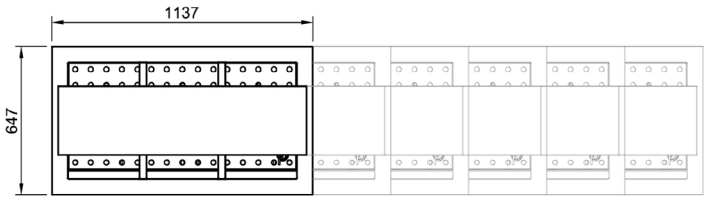

Plan View

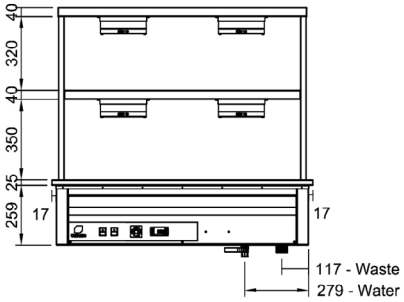

Front Elevation

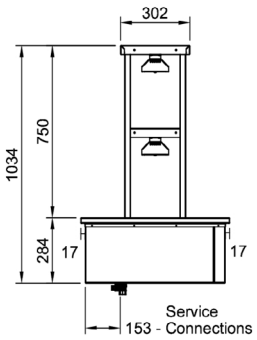

End Elevation

Proudly Manufactured in Australia

Due to continuous product research and development, the information contained herein is subject to change without notice

Manufactured By:
Tom Stoddart Pty Ltd. ABN 16 009690251
39 Forest Way, Karawatha 4117 Queensland Australia
Tel : +61 7 3440 7600 Fax : +61 7 33441000
Web site: www.stoddart.com.au

STODDART®