Birko Tempo Tronic

Installation and Operating Instructions

1090074	Tempo Tronic 3L S/S
1090076	Tempo Tronic 5L S/S
1090078	Tempo Tronic 7.5L S/S
1090082	Tempo Tronic 15L S/S
1090086	Tempo Tronic 25L S/S
1100076	Tempo Tronic 5L S/S + Timer

Table of Contents

Read These Warnings First 3
Installation Requirements 3
Installation Procedures 4
Step 1 – Positioning 4
Step 2 – Fastening 4
Step 3 – Connecting 5
a) Plumbing 5
b) Venting 5
c) Electrical. 6
Step 4 – Assembling. 6
Step 5 – Commissioning 6
Operating Procedures 7
Earthing Continuity Verification. 7
Problem Solving 8
Wall Mounting Template Dimensions 9
Cleaning. 9
End of life disposal 9
Spare Parts 10
Exploded View Diagram 11
Contact Details 12

Note:

All plumbing must comply with the relevant parts of AS/NZS 3500

All electrical must comply withthe relevant parts of AS/NZS 60335/3000

Read These Warnings First

Please read all installation requirements, installation procedures and precautions before installing any Birko Tempo Tronic instant boiling water heater.

Never attempt to install any Birko Tempo Tronic instant boiling water heater without reading all of the applicable instructions.

In some hard water areas where mineral scale accumulation in the boiling chamber of the Birko Tempo Tronic may become a problem, consideration should be given to the maintenance required. A suitable form of water treatment may be necessary.

The cold water supply to this appliance must be potable and fall within your local authorities guidelines.

The Birko Tempo Tronic instant boiling water heater is not intended for use by young children or infirm people without supervision.

Young children should be prevented from having access to ensure that they are not able to use or play with the heater.

If the installation site is located more than 1000 metres above sea level, the installer should contact Birko for high altitude thermostat.

This appliance must be earthed. If the power supply cord is damaged it must be replaced by a qualified electrician.

Do not remove the cover of the heater under any circumstances without first isolating the heater from the power supply.

Do not use strong, corrosive or abrasive cleaners to clean the case of the heater.

Frost protection: If this heater is located where ambient air temperature could fall below 5ºC when the heater is not in use, do not turn off the appliance electrically. This safeguard does not offer the same protection to the connecting pipework and fittings.

The ambient temperatures this unit must operate within are 5ºC - 50ºC.

This heater is intended only for indoor use and should never be installed outdoors or be exposed to the elements of nature.

This unit must not be positioned in an area that may be cleaned by a water jet. This unit must not be cleaned by a water jet.

Installation Requirements

Before installing, ensure that the following are available:

a) Sufficient space to position the heater so there is at least 150 mm clearance above the heater for service access, 65 mm to its left and 20 mm to its right – the tap outlet usually should be positioned at least 200 mm above a draining board or drip tray.

b) Standard 220- 240 volt power cable positioned as shown on the paper mounting template for connection from the rear of the heater to the terminal block within the heater, OR a standard 10 amp 220-240 volt power outlet on the wall withing 1500 mm of the heater. This switch must provide all-pole disconnection and a contact seperation of at least 3 mm installed in accordance with wiring rules.

Installation Requirements continued

c) Cold water supply with a minimum working pressure of 70 kPa and a maximum working pressure of 500 kPa connected via an isolation valve.

d) Outlet drainage to a sink draining board or to a drip tray.

e) Access to drainage from a vent situated at the base of the heater.

If the water pressure is likely to exceed 500 kPa, a 350 kPa pressure reducing valve must be installed in the cold water supply line.

f) In all installation instances the walls of the heater must be vertical and the base horizontal, there can be no exceptions to this rule.

Installation Procedures

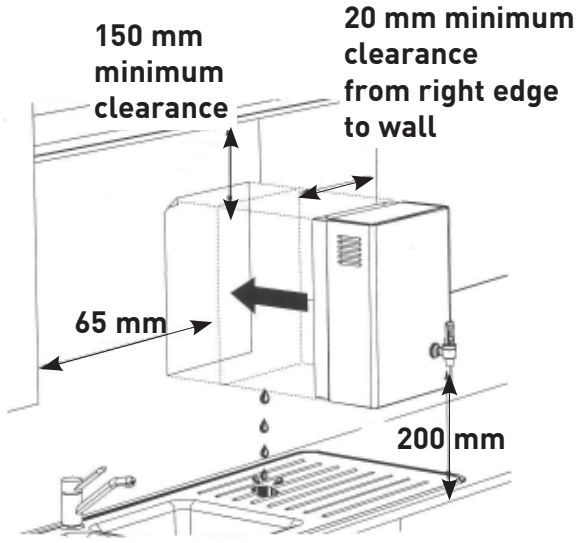

3L, 5L & 7L

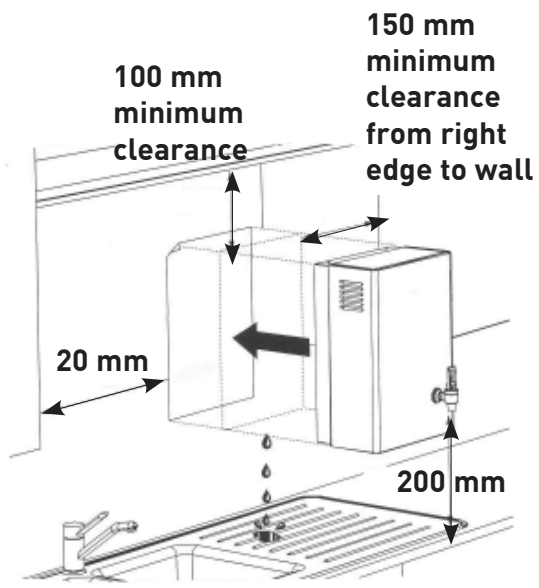

15L, 25L & 40L

Before You Begin

Locate the paper mounting-hole template packed with the heater.

Read the installation and operating instructions completely.

Decide whether to install with concealed or exposed plumbing and/or electrical connections. Concealed connections are preferred for superior appearance.

Step 1 – Positioning

Position the heater so the tap will drain on to a draining board or drip tray.

Position the base of the tap to be not less than 200 mm above the draining board (height should be increased only if essential for filling larger vessels).

Provide clearance for service access of not less than 150 mm top, 65 mm left, 20 mm right.

Mark corner positions for the heater on the wall so as to position the paper mounting-hole template.

Step 2 – Fastening

Position mounting-hole template on wall and drill holes where shown.

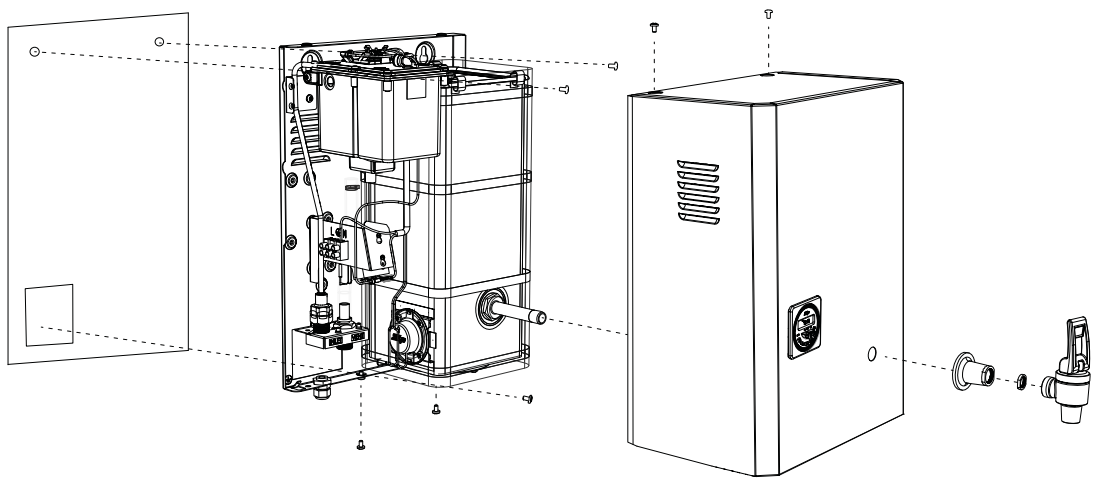

Approximate Weight When Filled

3 Litre model	12.5 kg
5.0 Litre model	16.5 kg
7.5 Litre model	20.5 kg
15 Litre model	34.5 kg
25 Litre model	47 kg

Remove cover fastening screws from heater and lift whole cover off heater.

Install plumbing and wiring and prepare pipe ends and wiring ends as required.

Screw heater chassis to the wall using screws or bolts suited to the walling.

Screws or bolts must be capable of supporting the heater weight when filled. (Refer to table to the left).

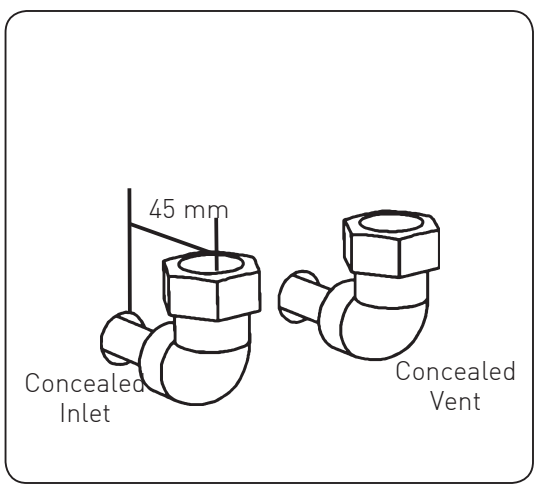

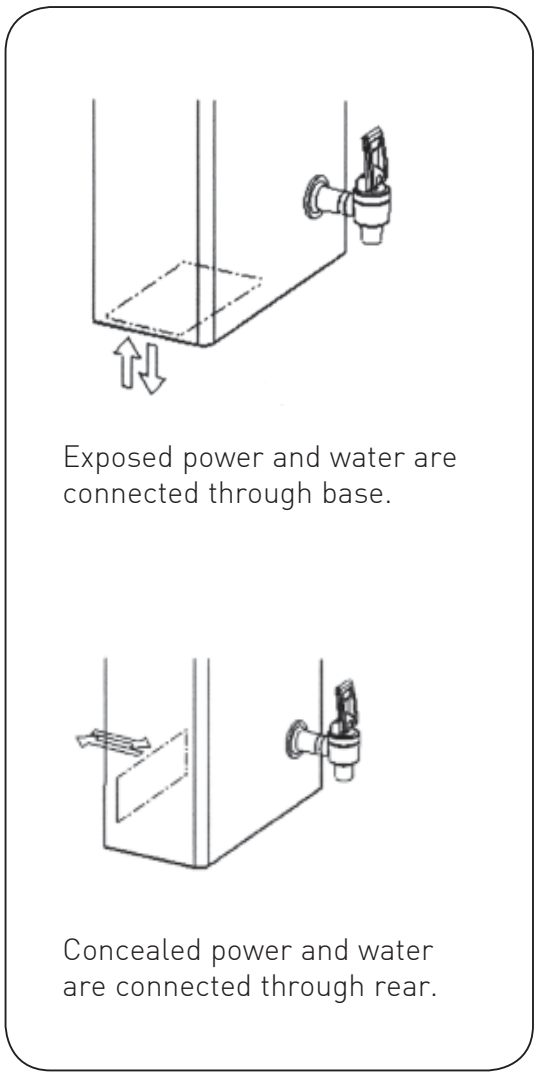

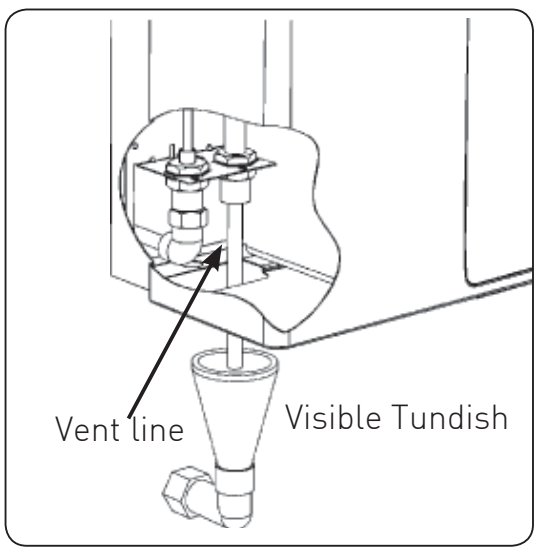

Step 3 – Connecting

THE FOLLOWING PROCEDURE IS TO BE DONE BY AN AUTHORISED INSTALLER ONLY.

a) Plumbing

For exposed plumbing connection, connect the cold water inlet pipe from the base of the heater directly to the 1/2" or 12.7 mm compression fittings.

For concealed plumbing connections, connect the cold water pipe through the rear of the chassis using a 1/2" or 12.7 mm capillary elbow (# 63 Swivel Elbows).

Cold water pipes must be flushed before connection to the inlet. Any clogging due to sediment or fines will adversely affect the operation of the heater.

It is recommended that the heater be installed with a stop cock which allows it to be isolated from the mains supply for servicing.

Water pressure requirements:

Minimum - 70 kPa, maximum - 500 kPa.

Warning: If pressure is likely to exceed 500 kPa, a pressure limiting valve must be installed in the cold water supply line. Birko recommends a valve rated at 350 kPa for this application.

b) Venting

A vent at the base of the heater must be plumbed to a safe visible location as, under certain conditions, it may discharge cold or boiling water and/or steam.

For exposed vent plumbing, connect vent outlet from the base of heater to a 1/2" or 12.7 mm pipe which has a continuous fall, is no more than 3 metres long, has no more than 3 right angle bends, and discharges to a waste water drain.

For concealed vent plumbing, connect plumbing to the vent outlet from the heater rear using a capillary elbow protruding 45 mm from the wall.

Alternatively attach a tun dish to the wall as shown and plumb away to waste.

Tun Dish part numbers:
Wall Mounted Tun Dish- 99017 and Straight Tun Dish- 99018.

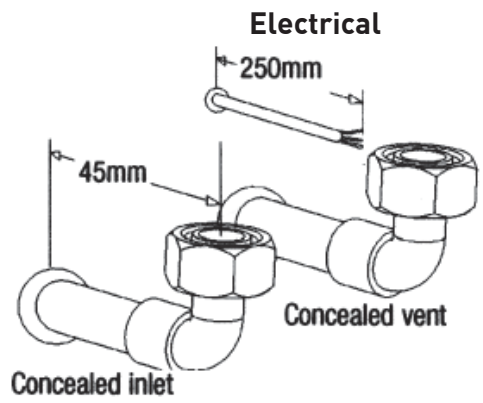

c) Electrical

This unit is designed for connection to 220-240 volt AC power supply via either a concealed electrical connection or an exposed electrical connection.

For exposed electrical connection the unit is supplied with a power cable connected directly to the terminal block through the heater base.

For concealed electrical connection, fit a power cable from the rear through the chassis opening provided directly to the terminal block as shown.

Do not turn the power ON yet. Power is only to be turned on after the timer, the cover and the tap is fitted and the unit is filled with water. Before fitting outer case, turn the water on to check for any leaks. If there are any leaks re-visit plumbing instructions. If all is dry then isolate water.

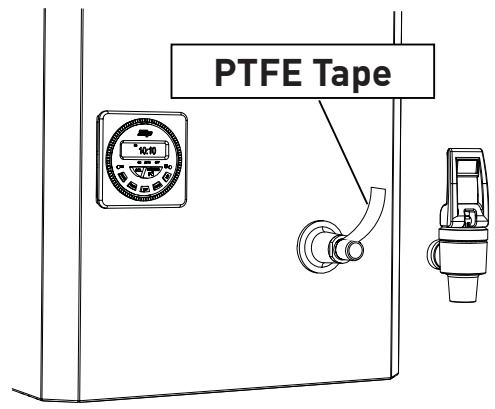

Fig.1

Step 4 – Assembling

Fit the cover and screws, then fit the black escutcheon over the outlet. Secure lock nut all the way to escutcheon tube then apply PTFE tape to the threaded portion of the outlet tube, if not already applied. See Fig.1.

Screw the tap assembly clockwise onto the outlet tube until it touches the lock nut without pressure, see Fig.2. Continue to turn the tap one full rotation maximum until the handle is fully vertical. Secure tap in vertical position by turning lock nut anti-clockwise.

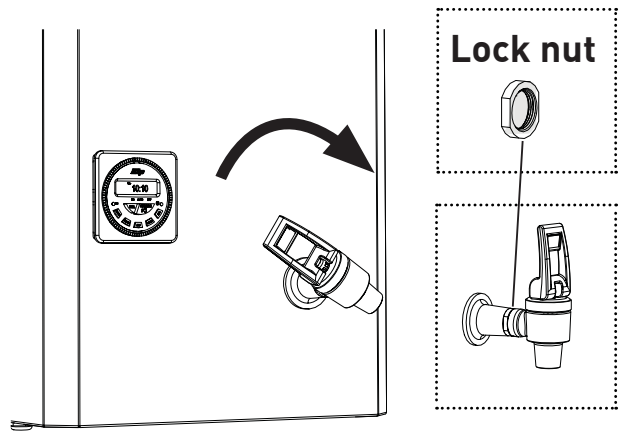

Fig.2

Step 5 – Commissioning

Check previous steps. Turn water supply ON. Water is now flowing into heater, check connections for leaks. Wait approximately 5 minutes and check outlet tap for water. This is acheived by pulling the tap handle forward.

Power is only to be turned on when water is available from this outlet.

Turn power ON. After a short period, boiling water will be available and will be maintained close to boiling point thereafter. Initial heating periods are shown in the table below.

Inlet water Temperature	15ºC	10ºC
3 Litre models	16 minutes	17 minutes
5.0 Litre models	16 minutes	17 minutes
7.5 Litre models	23 minutes	24 minutes
15 Litre models	40 minutes	43 minutes
25 Litre models	47 minutes	50 minutes

Operating Procedures

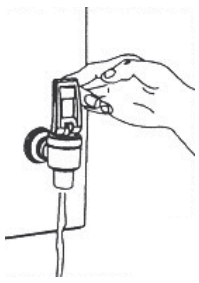

Pull handle down for water flow than release.

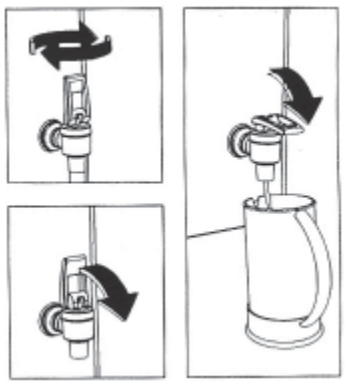

Handle rotates 180º for locked down positions and must be manually returned.

Tap Operation

Birko Tempo Tronic is fitted with a two-way safety tap for instant boiling water.

For instant boiling water, gently pull the top of the tap forward.

Boiling water will flow until the tap handle is released. This operation gives fingertip flow control for safe filling of cups and mugs.

To fill larger vessels such as teapots and saucepans, rotate the tap 180 degrees and pull down until it locks into a horizontal position.

Boiling water will flow until the tap is returned to its normal vertical position. This operation allows the vessel to be filled without holding your hand where it may be affected by steam.

Earthing Continuity Verification

If required, an earth continuity test can be performed by testing between the earth pin on the products lead and a exposed piece of metal on the case.

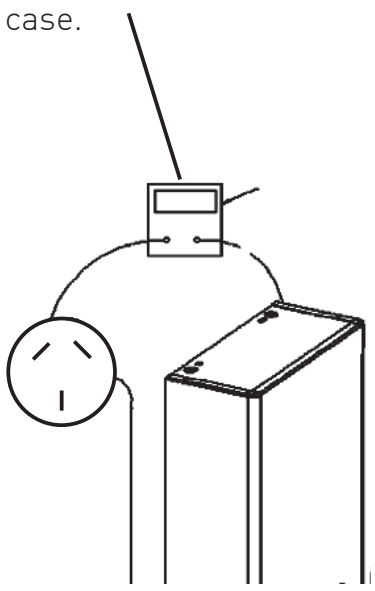

Warning: this appliance must be earthed.

Following remedial service the earthing continuity of the heater must be checked by a qualified technician using an appliance tester, or continuity tester of accuracy Class 5 or better. Class 5 denotes an accuracy of 5% full scale deflection.

1. Isolate power supply.
2. Set meter to 0 ohm with leads connected together.
3. Connect one test lead to the earth pin on the three pin plug.
4. Connect the other test lead to a bare patch of metal (preferably on the edge) of the top of the cover, then to the front cover of the unit, and then to the tap.

Warning- the water may be boiling - show extra care.

5. Test that in every instance the electrical resistance does not exceed 1 ohm.

Problem Solving

Symptom	Possible Cause	Solution
Fails to dispense water.	Water isolating valve turned off. Blocked filter, blocked meter tube, blocked strainer, jammed ball valve assembly, airlock in transfer tube.	Check water supply valve. Contact Birko authorised agent.
Water not boiling.	No power. Faulty thermostat, faulty element faulty cutout. Incorrect timer setting	Check power supply. Contact Birko authorised agent. Check timer setting
Runs out of boiling water and fails to refill. Outlet tap drips. Overflow from vent. Excessive steam from vent. Power "on" but no heat. Overload repeatedly tripping with excessive steam. Overload repeatedly tripping without excessive steam.	Internal adjustment.	Contact Birko authorised agent.

Wall Mounting Template Dimensions

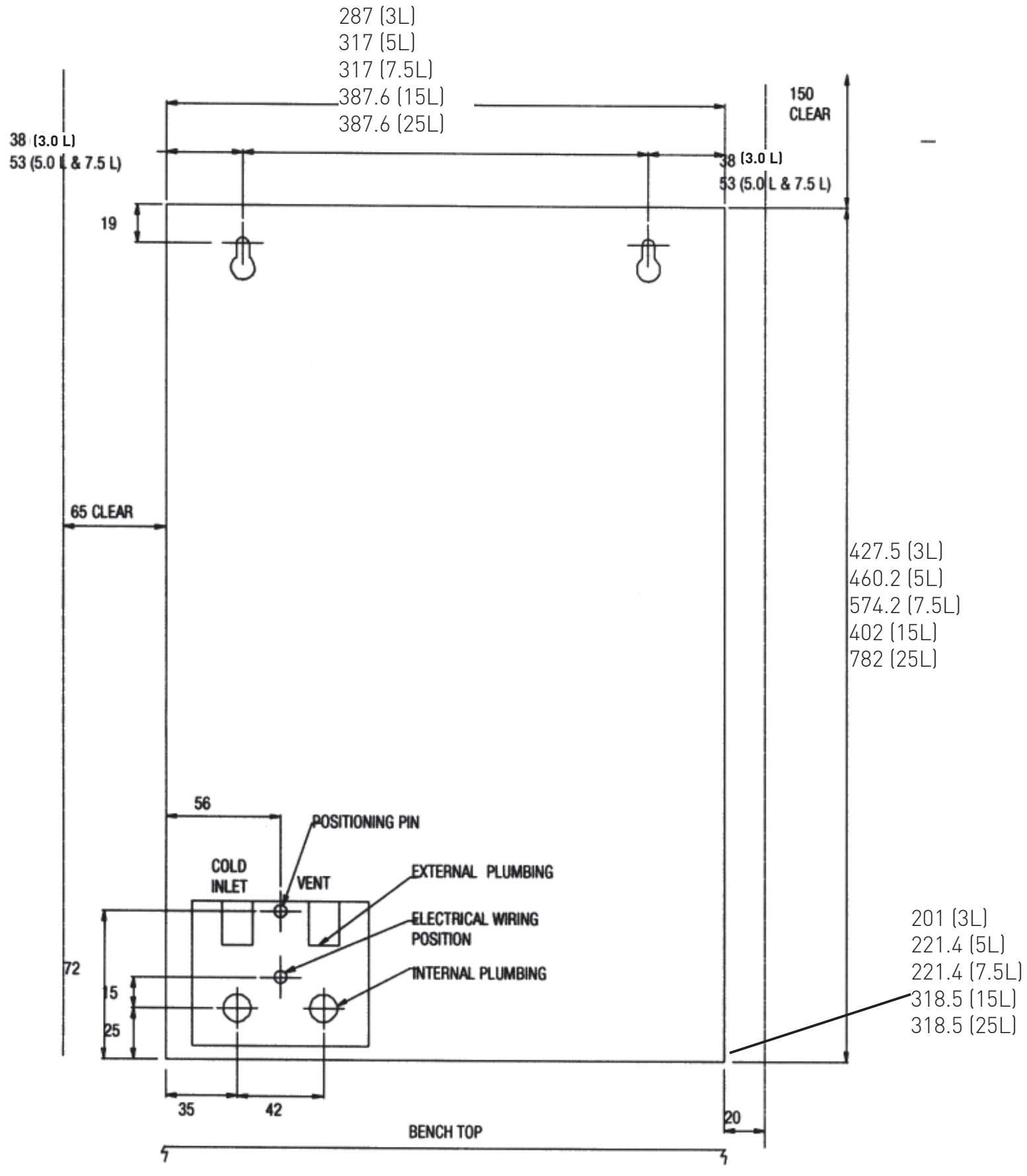

Cleaning

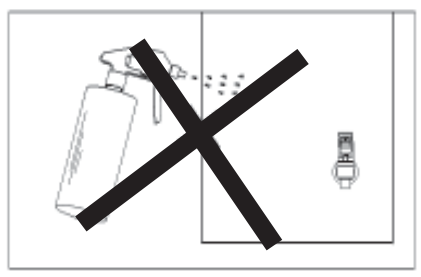

Cleaning Case

Do not use strong, corrosive, spray or abrasive cleaners. Clean the case with a soft cloth or brush and mild soap and water.

End of Life Disposal

In order to help preserve our environment we ask that you dispose of this product correctly. Please contact your local city council for collection centre details.

Spare Parts List

Item	Kit No	Description
1	1311055	Birko Tap assy TT
2	1311059	Tap Insert Assy Birko
3	1312222	Escutcheon Black TT
4	1312223	Tap Lock Nut (w/ Flats)
5	1312224	Timer Loom Birko TT 5l
6a	1312225	Thermostat EA3513R 88º+/-1.5
6b	1312226	Thermostat EA3513A 85º+/-1.5
7a	1312227	Inlet assy 3l
7b	1312228	Inlet assy 5l
7c	1312229	Inlet assy 7.5l
7d	1312230	Inlet assy 15l
7e	1312231	Inlet assy 25l
8	1312232	Filter cold inlet bush (plastic)
9a	1312233	Bush vent assy 3l
9b	1312234	Bush vent assy 5l
9c	1312235	Bush vent assy 7.5l
9d	1312236	Bush vent assy 15l
9e	1312237	Bush vent assy 25l
10	1312238	Loom Birko TT Ther-Overload
11	1315320	Timer 7day-24Hr Gray
12	1312239	Lid, Cistern TT
13	1312240	Jumper Valve Assy
14	1311013	Floating Ball ASSY
15	1311031	Overload 4 terminal, 2 pole, 90 deg
16	1312242	Tank, Cistern
17	1312243	Seal Transfer Tube 2000B
18	1312244	Metering Tube 2.4kW
19	1312245	Elbow Stem 1/4" x 1/4" JG
20a	1312246	Tank Assy S/S TT 3 Ltr
20b	1312247	Tank Assy S/S TT 5 Ltr
20c	1312248	Tank Assy S/S TT 7.5 Ltr
20d	1312249	Tank Assy S/S TT 15 Ltr
20e	1312250	Tank Assy S/S TT 25 Ltr
21	1312251	O Ring BS114 Silicone
22a	1312252	Element 2400/240v HS2005B
22b	1312253	Element, 1500 (3l)

Exploded View Diagram

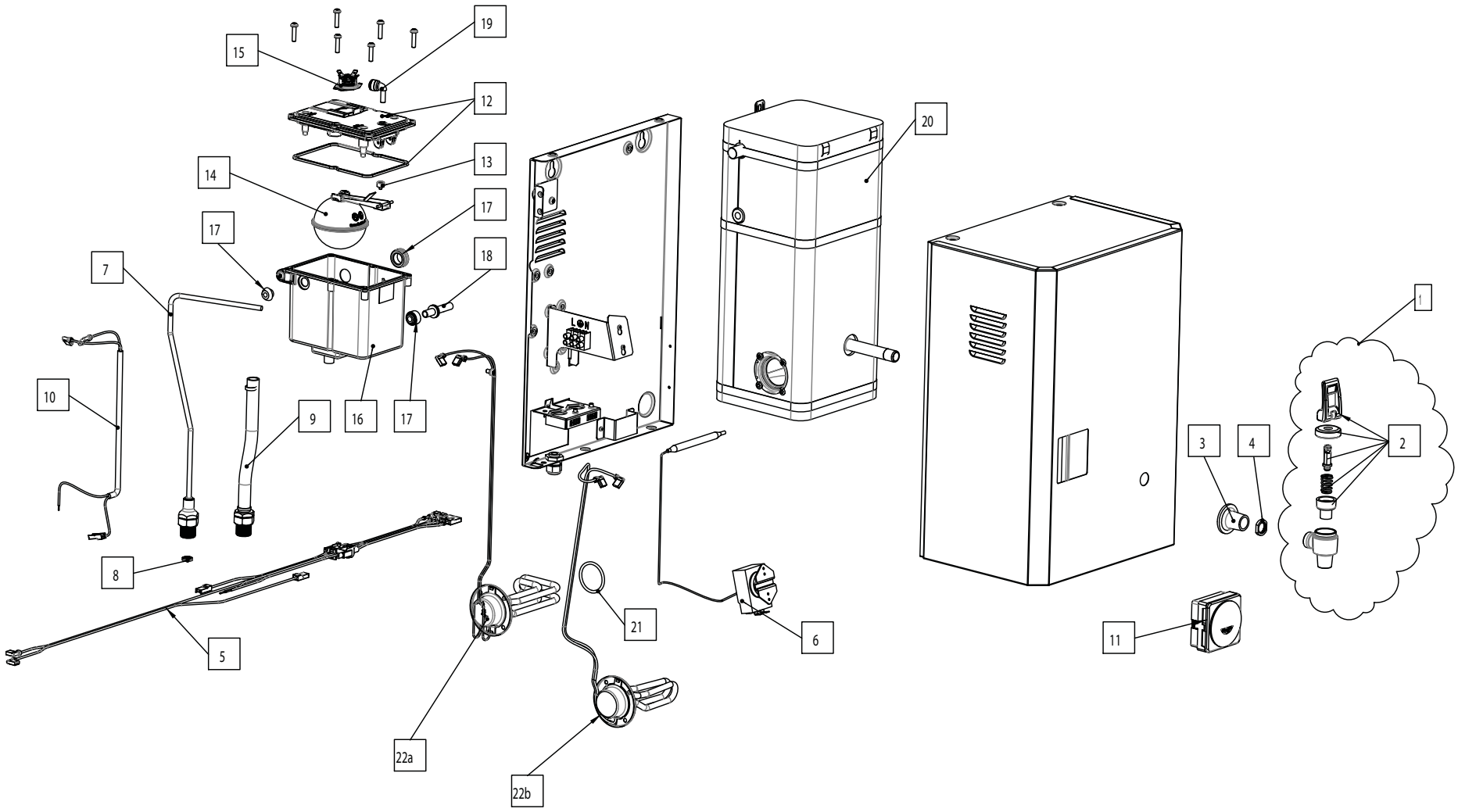

Contact Details

Head Office

Birko Heaters Australia Pty. Ltd.
ABN 39 103 881 625
67-77 Allingham Street
Condell Park NSW 2200
Postal: Locked Bag 80
Bankstown 1885 Australia

Website: www.birko.com.au
Telephone +61 2 9796 3100
Free Call 1 300 724 955

As Birko's policy is one of continuous product improvement, changes to specifications may be made without prior notice. Images in this booklet have been modified and may not be true representations of the finished goods.

The standard cup referred to in this publication is 167 ml (6 fl oz).

© 2017 Birko Heaters Australia Pty. Ltd. All Rights Reserved.

The terms "Birko" "Tempo Tronic are trademarks of Birko Heaters Australia Pty Ltd.

Products described in this publication are manufactured under one or more patents and further patent applications are pending.