ROBAND

GRIDDLES & GRIDDLE TOASTERS

Powerful, versatile cooking

INTRODUCING THE RANGE

Designing high-performance machines that busy foodservice outlets can rely on, is what Roband does best. Our comprehensive range of Roband Griddles and Griddle Toasters is no exception, with our Australian made range delivering performance, reliability and longevity.

The range extends from Griddles and Griddle/Toasters designed to work in medium duty

applications and extract the very best performance possible from 10 Amps; through to powerful hard-wired 20+ Amp machines that facilitate high volume output.

The complete range offers a solution to cater to a multitude of kitchen set-ups and food production requirements.

The Griddle Range

From the outside, all brands of Griddles look quite similar but, it's what's inside a Griddle that determines how well the machine will perform under pressure and when you need it the most. This is where Roband Griddles are set apart from the competition and allow you to precisely cook a variety of food from steaks, chicken, fish and burger patties, fritters to eggs and bacon.

All Roband griddles feature uniquely designed elements that provide maximum temperature penetration specifically into the thick, steel griddle plate. The unique element design results in a smooth, controllable and even temperature across the cooking surface.

Roband Griddles help you achieve:

1) Faster cooking times with rapid temperature recovery when loaded with food
2) Lower power consumption and heat losses
3) Even temperatures for professional cooking
4) Reliable food quality outcomes

Three Griddles are offered in the Roband range, each delivering best in class performance. Every machine plate size has been engineered to deliver the best cooking experience possible from the power supplied.

Roband's Unique Element Design

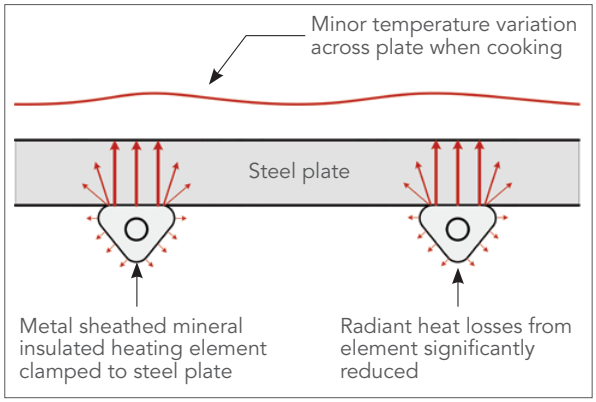

All Roband Griddles Feature:

- 8 mm thick griddle plates for superior heat retention
- Superior, compacted griddle plate elements for fast temperature recovery and reliable temperature control
- Thermostat control for precise cooking temperature. Dual on G700 for control of left and right side of plate
- Large capacity forward positioned grease box which is dual skin for lower touch temperatures and integrated into machine to reduce risk of spillage and minimise bench space

The Models

G500 (8 mm plate)
2300W, 10 Amp

Extreme Performance (XP)
G500XP (8 mm plate)
3450W, 15 Amp

G700 (8 mm plate)
4240W, 18.4 Amp

Griddle Selection Guide

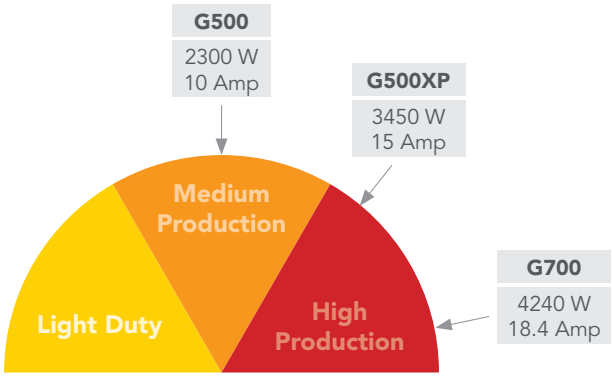

Griddle Specifications

MODEL	POWER Watts	CURRENT Amps	PHASE	DIMENSIONS ^ w x d x h (mm)	COOKING SURFACE w x d (mm)
G500	2300	10	1	538 x 443 x 263	515 x 340
G500XP	3450	15	1	538 x 443 x 263	515 x 340
G700*	4240	18.4	1 or 2 (+N)	725 x 529 x 263	700 x 400

*Installation must be carried out by a licensed electrician. For this reason, the G700 model does not come with a plug and cord. The decision on connection options should be made under consultation with your electrician. Can be wired for Single Phase or 2 phase + n. We recommend using more than 1 phase for this machine as multiple phases will help evenly balance load and will reduce stress on product components. ^Dimensions include grease box.

Griddle Toaster Range

Griddle Toasters are the perfect combination machine to produce a great top toasting result, whilst precisely cooking your steaks, eggs, bacon or hamburgers on the griddle cooking plate.

Each model within the Roband Griddle Toaster range has been engineered to maximise the performance of the machine in both the griddle and toasting functions. They all feature separate elements for the heavy steel griddle plate as well as the toasting compartments to ensure consistent and optimal results across both functions.

Three Griddle Toaster models are available:

1) GT480 - honed to provide maximum punch from 10 Amps, caters to outlets that are limited by power supply, but still have a need for both griddle and top-toasting functions.

2) GT500 – slightly larger plate size than GT480 with more power and grunt. Designed for medium to fast paced food production.

3) GT700 - is for very busy operations with a need to produce significant volumes of food from a bench-top machine.

Dual Element System used on all models

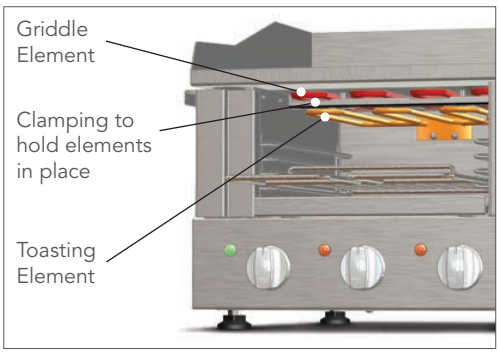

With a comprehensive, diverse and well-designed range of Griddle Toasters, a Roband solution can be found to suit almost any counter top application.

The Griddle Toaster range features:

- 8 mm thick steel cooking plates for superior heat retention (GT480 features 6 mm plate)
- Superior, compacted cooking plate elements for fast temperature recovery and reliable temperature control
- Thermostat control for precise griddle plate cooking temperature.
- Dual element system has independent control of the toasting function and griddle plate function, providing optimum cooking control for kitchen staff. The toasting compartment of all models is designed to work in tandem with the hotplate operation. (Note GT480 toast elements are controlled by the On/Off switch)
- The larger GT700 model features independent operation of the left or right side of the griddle and toaster for efficient use in quiet periods
- Large capacity forward positioned grease box which is dual skin for lower touch temperatures and integrated into machine to reduce risk of spillage and minimise bench space
- Toasting crumb tray is removable for easy cleaning of toasting compartment

The Models

GT480 (6 mm plate)
2300 W, 10 Amp

GT500 (8 mm plate)
3280 W, 14.3 Amp

GT700 (8 mm plate)
5960 W, 26 Amp

Griddle Toaster Selection Guide

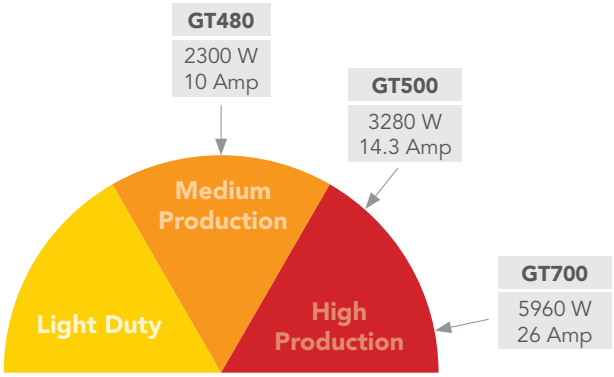

Griddle Toaster Specifications

MODEL	POWER Watts	CURRENT Amps	PHASE	DIMENSIONS ^ w x d x h (mm)	COOKING SURFACE w x d (mm)	MAX. FOOD CLEARANCE (mm)
GT480	2300	10	1	495 x 425 x 374	480 x 308	70
GT500	3280	14.3	1	537 x 457 x 374	515 x 340	70
GT700*	5960	26	1, 2 or 3 (+N)	725 x 541 x 374	700 x 400	70

*Installation must be carried out by a licensed electrician. For this reason, the GT700 model does not come with a plug and cord. The decision on connection options should be made under consultation with your electrician. Can be wired for Single Phase, 2 phase + n or 3 phase + n. We recommend using more than 1 phase for this machine as multiple phases will help evenly balance load and will reduce stress on product components. ^Dimensions include grease box and do not include the protruding rack.

FEATURES & SPECIFICATIONS

Features of Griddles & Griddle Toasters

High splash guard

Roband's unique element design delivers faster heat transfer, lower power consumption and reduced heat losses

Dedicated cooking & toasting elements for optimal performance

8 mm steel plate.
(6 mm GT480)

Removable, integrated, dual skin grease box

Top toasting rack with bun stop on all Griddle Toaster models

Thermostat controlled cooking plate for precise temperature control

GT500 pictured

Energy regulator control for toasting. (excl. GT480 where toast elements are controlled by the on/off switch)

Forward positioned grease gutter

Integrated & insulated grease collection box

Adjustable, high quality feet

GRIDDLES & GRIDDLE TOASTERS PRODUCT RANGE

Griddles

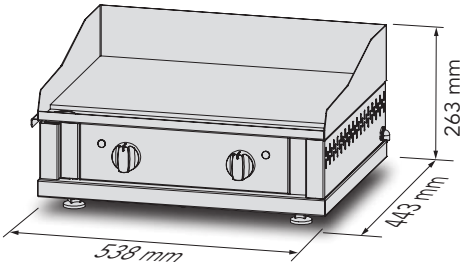

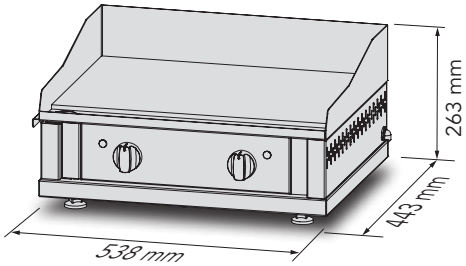

Model No:	**G500**	**G500XP**
Current:	10 Amps	15 Amps
Power:	2300 Watts	3450 Watts
Plate w x d:	515 x 340 mm	515 x 340 mm
Plate thickness:	8 mm	8 mm
Productivity:	Medium Production	High Production

Griddle Toasters

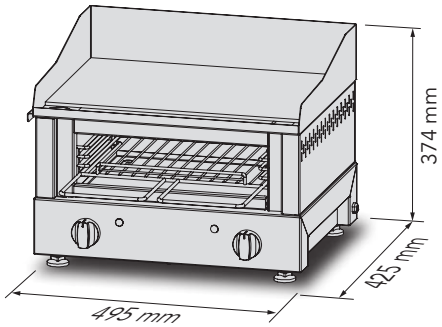

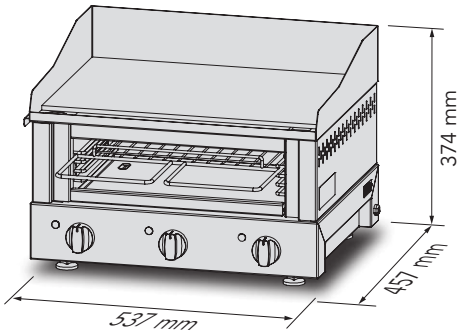

Model No:	**GT480**	**GT500**
Current:	10 Amps	14.3 Amps
Power:	2300 Watts	3280 Watts
Plate w x d:	480 x 308 mm	515 x 340 mm
Plate thickness:	6 mm	8 mm
Productivity:	Medium Production	High Production

SNAPSHOT

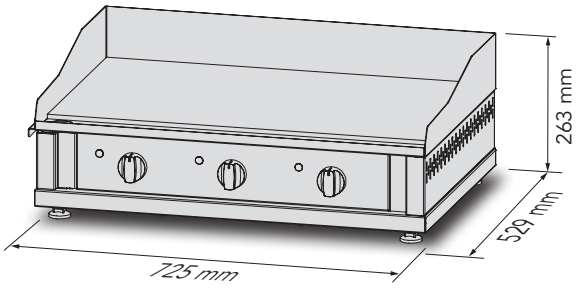

G700
18.4 Amps
4240 Watts
700 x 400 mm
8 mm
Very High Production

Griddles
Plate Sizes Comparison

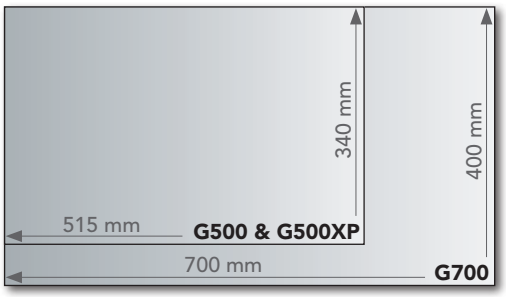

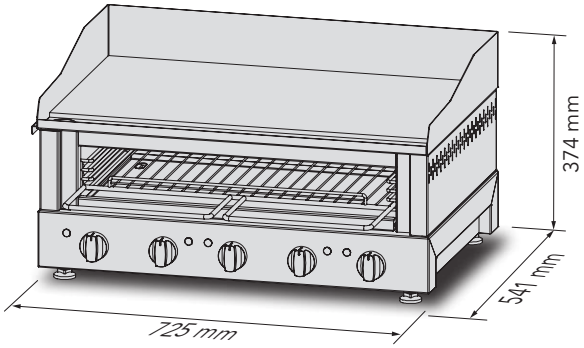

GT700
26 Amps
5960 Watts
700 x 400 mm
8 mm
Very High Production

Griddle Toasters
Plate Sizes Comparison

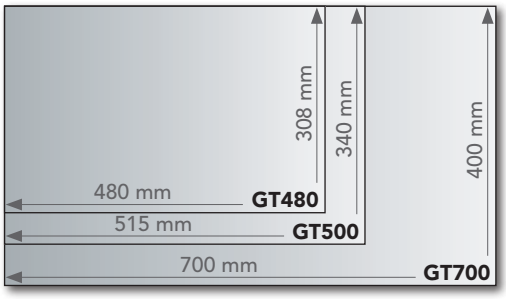

Roband Australia Pty Ltd
1 Inman Road,
Cromer, NSW 2099
Australia
Tel: +61 2 9971 1788
Fax: +61 2 9971 1336
Email: sales@roband.com.au

Roband (Europe) Ltd
Haygarth Park, Blaenau Ffestiniog
Gwynedd, North Wales
LL41 3PF, UK
Tel: +44 (0) 1766 830 456
Email: info@robandeurope.com

All standard Roband Griddle & Griddle Toasters are designed to run at 230V per phase, 50Hz.

All dimensions are nominal only. All information contained in this brochure should serve as a guide only and is subject to change without notice due to constant research and development.

© 2017 Roband Australia Pty. Ltd. ACN 003 049 063 ABN 34 864 327 105

® is a registered trademark of Roband Australia Pty. Ltd.

Distributor: