Manufactured By

ROBAND AUSTRALIA PTY LTD

OPERATING INSTRUCTIONS

BAIN MARIES

Models: **BM14, BM15, BM16, BM22, BM23, BM24, BM25 & BM26**

Version 1 & 2

Special Features:

- Ultra-Durable Stainless Steel Elements
- Designed to take many combinations of pans
- Wet or Dry Operation
- Thermometer Display

These instructions cover the models of ROBAND® Bain Maries listed above only. Although there are slight variances between models, the installation, operation, care and maintenance procedure is the same for all.

2/09/2016

Roband® Australia is a wholly Australian owned company and has been manufacturing quality commercial catering equipment for the food service industry for more than 50 years. Roband products are engineered and manufactured to the highest standards to provide functionality, reliability and durability, and our quality products are exported world-wide.

Included in the comprehensive Roband® range are Toasters, Fryers, Milkshake Mixers, Rotisseries, Food Display Cabinets and much more.

Roband® Australia also acts as the Australian agents for Vitamix® Blenders, Noaw® Meat Slicers, Förje® Cookware, Robalec™ Soup/Rice Warmers, Robatherm Urns, Austheat® Fryers, Dipo Induction & Autofry Machines. Roband also has its own line of commercial cookware and cutlery under the Robinox® brand name.

For a complete set of brochures please contact your nearest authorised dealer or contact Roband directly at our head office.

Roband Head Office
Sydney, Australia

Roband Australia Pty Ltd	**Tel:**	+61 2 9971 1788
1 Inman Road	**Fax:**	+61 2 9971 1336
Dee Why NSW 2099	**Email:**	sales@roband.com.au
AUSTRALIA	**Web:**	www.roband.com.au

International Agents
For additional agents please email Head Office

Belgium	Linum Europe Ph: +32 (0)56 35 92 96	**Noumea:**	Comptoir Materiel Professionnel Ph: +687 28 50 43
Fiji:	Hotel Equipment Ltd Ph: +679 672 0666	**Papua New Guinea:**	Brian Bell & Company Pty Ltd Ph: +675 325 5411
Germany	Lolsburg Ph: +49 93059878-0	**Singapore:**	Allied Foodservice Equipment Ph: +65 62525880
GREECE	K&N Engineers Ltd Ph: +30 210 520 0440	**South Africa**	Foodservice Solutions (Pty) Ltd Ph: +31 306 017 442
Hong Kong:	Chung Wah Kitchen Machine Ltd Ph: +852 2334 5411	**Thailand:**	Seven Five Distributors Co Ltd Ph: +662 866 5858
Italy	NOAW Ph: +39 0331 219723	**United Kingdom**	Metcalfe Catering Equipment Ph: +44 (0) 1766 830456
Malaysia:	Allied Food Equipment Ph: +603 9133 5833	**United Arab Emirates:**	Boncafe Middle East LLC +9714 282 8742
Maldives:	Radiant Heat Maldives Pty Ltd Ph: +960 333 4845	**United Arab Emirates:**	Nisa Trading LLC +9714 396 6132
New Zealand:	Roband New Zealand Ph: +649 274 1354	**U.S.A.**	Smart Kitchen Solutions Ph: +1 508 244 1365

© Copyright 2015 – Roband® Australia Pty Ltd

All rights reserved. No part of this work may be reproduced or copied in any form or by any means, electronic or mechanical, including photocopying or posting to a website, without the written permission of the publisher. The material contained within this document is intended entirely for instructional purposes.

CONTENTS

INTRODUCTION 1
GENERAL PRECAUTIONS 1
PACKAGING 2
COMPLIANCE 2
INSTALLATION 3
GENERAL SAFETY 5
CLEANING, CARE & MAINTENANCE 6
TROUBLESHOOTING 7
SPECIFICATIONS 8
CIRCUIT DIAGRAM 9
APPENDIX A 10
WARRANTY 12

INTRODUCTION

Congratulations on your purchase of this quality ROBAND® product. With proper care and management your new purchase will give you years of trouble free service.

By reading these instructions carefully you can ensure that this machine is used and maintained properly, helping your new investment to perform well for you now, and to continue performing in the many years to come.

GENERAL PRECAUTIONS

This machine must only be operated by qualified person(s) who are fully versed in the operating and safety instructions described in this manual. Servicepersons should be instructed to familiarise themselves with any and all safety instructions described in this manual prior to commencement of any maintenance or service.

In the case of new personnel, training is to be provided in advance. These machines should not be operated by persons (including children) with reduced physical, sensory or mental capabilities, or lack of experience or knowledge, unless they have been given supervision or instruction concerning the safe use of the appliance by a person responsible for their safety.

These machines are heating units, and as with any commercial heating unit the surfaces on these units will get hot. Always be careful when near an operating Bain Marie, and ensure that any risk to unwary customers or staff is minimised with additional signage if necessary. Due to the obvious heat hazard Roband recommends that these units be kept out of reach of children.

The performance of this unit cannot be guaranteed for operational use outside its design parameters.

The machine should be disconnected from all power and allowed to cool before cleaning.

Roband will accept no liability if;

- Non-authorised personnel have tampered with the machine.
- The instructions in this manual have not been followed correctly.
- Non-original spare parts are used.
- The machine is not cleaned correctly, with the right product.
- There is any damage to the unit.
- The machine has been modified in any way.

PACKAGING

All care is taken when packing and Roband ensures that every unit is functional and undamaged at the time of packaging.

The Package of this Bain Marie should include:

1) One Bain Marie (appropriate model)
2) Pans & Lids (appropriate number if ordered)
3) This Manual
4) Packaging Materials

Any damage to the machine as a result of freight must be reported to the Freight Company and to the agent responsible for the dispatch of said unit within 24 hours of receipt. No claims will be accepted or entertained after this period.

COMPLIANCE

RCM:
Roband® products have been designed and manufactured to comply with any and all specifications set out by the Australian Communications and Media Authority (ACMA) in regards to Electromagnetic Compatibility. As testament to such compliance these units bear the RCM symbol.

For further information contact the Australian Communications Authority, PO Box 13112, Law Courts, Melbourne VIC 8010.

INSTALLATION

Remove all the packaging materials and tape, as well as any protective plastic from the machine. Clean off any glue residue left over from the protective plastic using methylated spirit.

Place the Bain Marie on a firm, level surface in the required position. As a precaution, it is recommended that all non-metal bench top surfaces be protected from heat with some form of insulation. A piece of masonite, sheet metal, laminate or similar material would be sufficient for this task.

Before connecting the Bain Marie to the power supply, ensure that all the controls are in the "OFF" position.

Plug the machine into a power outlet matching the plug type supplied.

National Standards exist outlining the positioning, spacing and ventilation requirements when installing new appliances. These Standards should be consulted and new equipment should be installed accordingly. In any situation where specifications allow a distance of less than 100mm we would still recommend that a well-ventilated air gap of not less than 100mm be maintained. If the machine is near particularly heat-sensitive materials common sense should be employed in determining sufficient distancing.

OPERATION

The Bain Marie tank element is controlled by an energy regulator, located on the control panel. The thermometer on the control panel has been designed to function as a guide for operation only. It reflects the temperature beneath the pans. The thermometer does **not** directly reflect the temperature of the food in the pans.

The Bain Marie can be operated either wet or dry.

DRY OPERATION

Place all the pans in the Bain Marie. Set the energy regulator to the desired position and allow the Bain Marie to pre-heat for approximately 15 minutes before placing any food in the pans. An operating position of around 2 to 2½ should suffice, but experience will dictate the best position for the particular food being displayed.

Please note: Care should be taken while operating dry not to leave the energy regulator on HIGH for extended periods. The build up of excessive heat may damage the thermometer.

WET OPERATION

IMPORTANT: When using wet, only use clean distilled or filtered water. Hard Water (water with a high mineral content), Bore water or other poor quality water can cause accelerated corrosion and may void warranty.

For wet operation, the most important factor is the volume of water placed in the tank. The tank should be filled with fresh clean water to a level where it just touches the bottom of the element. The water level should **not** be so high as to touch the undersides of the pan. If the water level is too high, performance will be compromised.

Once the water has been placed in the tank, place all the pans in the Bain Marie. Turn the energy regulator to **high** and pre-heat the Bain Marie, bringing the water up to a temperature of approximately 65-70°C. As a guide this will take approximately 20 to 30 minutes. When the water has reached this temperature, the food may be placed in the pans and the energy regulator can be returned to a lower, operating value. As for dry operation, around 2 to 2½ should suffice, but experience will dictate the best position for the particular food being displayed.

SAFETY

GENERAL SAFETY

This machine contains no user-serviceable parts. Roband Australia, one of our agents, or a similarly qualified person(s) should carry out any and all repairs. Any repair person(s) should be instructed to read the Safety warnings within this manual before commencing work on these units.

Steel cutting processes such as those used in the construction of this machine result in sharp edges. . Whilst any such edges are removed to the best of our ability it is always wise to take care when contacting any edge.

Particular care should be taken to avoid contact with any steel edge, and warnings should be given in regards to the danger of such contact to any repair or maintenance person(s) prior to commencement of any servicing.

Do not remove any cover panels that may be on the machine.

This unit can get **very** hot, ensure everyone is aware that the machine is operating and take care to avoid contact with hot surfaces.

National Standards exist outlining the positioning, spacing and ventilation requirements when installing new appliances. These Standards should be consulted and new equipment should be installed accordingly. In any situation where specifications allow a distance of less than 100mm we would still recommend that a well-ventilated air gap of not less than 100mm be maintained on all sides. If the machine is near particularly heat-sensitive materials common sense should be employed in determining sufficient distancing.

Always ensure the power cable is not in contact with hot parts of the machine when in use. Ensure that any damaged power cord is replaced before further use. These cords should be replaced by qualified service persons only.

Keep out of reach of children.

Electricity is dangerous, and should only be handled by qualified professionals. It's your life – Don't risk it

CLEANING, CARE & MAINTENANCE

IMPORTANT: When using wet, Daily cleaning is required to avoid deposits building up which can cause corrosion. Never use caustic or abrasive cleaning chemicals or cleaning pads which can cause damage to the stainless steel.

When the Bain Marie is being operated wet, it must be stressed that clean, fresh water should be used at all times. The addition of a slice of lemon or lemon drops to the water daily will help to prolong the life of the element.

It is recommended that the water be allowed to cool before draining the tank. The tank and element can then be wiped clean. To clean the Bain Marie, use hot soapy water with a clean sponge or cloth. We recommend this be done daily to prolong the life of the element and tank. Do **not** use a metal scourer. In some areas hard water may cause a residue to build up on the surface of the tank and element. This should be removed to prevent any corrosion to the tank and/or element failure.

H HAZARD **CAUTION:** Although every care is taken during manufacture to remove all sharp edges, care should be taken when cleaning to avoid injury.

Particular care should be taken when cleaning under the rim of the tank to avoid contact with possible sharp edges.

TROUBLESHOOTING

If the Food Bar does not function check the following points before calling for service.

- ✓ The machine is plugged in correctly and the power id switched on.
- ✓ The power point is not faulty.
- ✓ The thermostat is not in the “OFF” position.
- ✓ The Thermostat knob is not loose or broken, rendering the thermostat inoperable.
- ✓ Check Appendix A on page 10 of this manual - RCD’S

Only after all these points have been checked should you call for service.

SPECIFICATIONS

			Nominal Dimensions		
Model	**Power Source**	**Power Rating**	**Width – mm**	**Depth - mm**	**Height - mm**
BM14	220-240 Volts AC 50-60Hz	1510-1800 Watts	1135	408	255
BM15	220-240 Volts AC 50-60Hz	1595-1900 Watts	1400	408	255
BM16	220-240 Volts AC 50-60Hz	1680-2000 Watts	1665	408	255
BM22	220-240 Volts AC 50-60Hz	1100-1300 Watts	705	615	255
BM23	220-240 Volts AC 50-60Hz	1680-2000 Watts	1030	615	255
BM24	220-240 Volts AC 50-60Hz	2520-3000 Watts	1355	615	255
BM25	220-240 Volts AC 50-60Hz	2605-3100 Watts	1680	615	255
BM26	220-240 Volts AC 50-60Hz	2605-3100 Watts	2005	615	255

Constant Research & Development may necessitate machine changes at any time.

CIRCUIT DIAGRAM

Models: BM14, BM15, BM16, BM22, BM23, BM25 & BM26

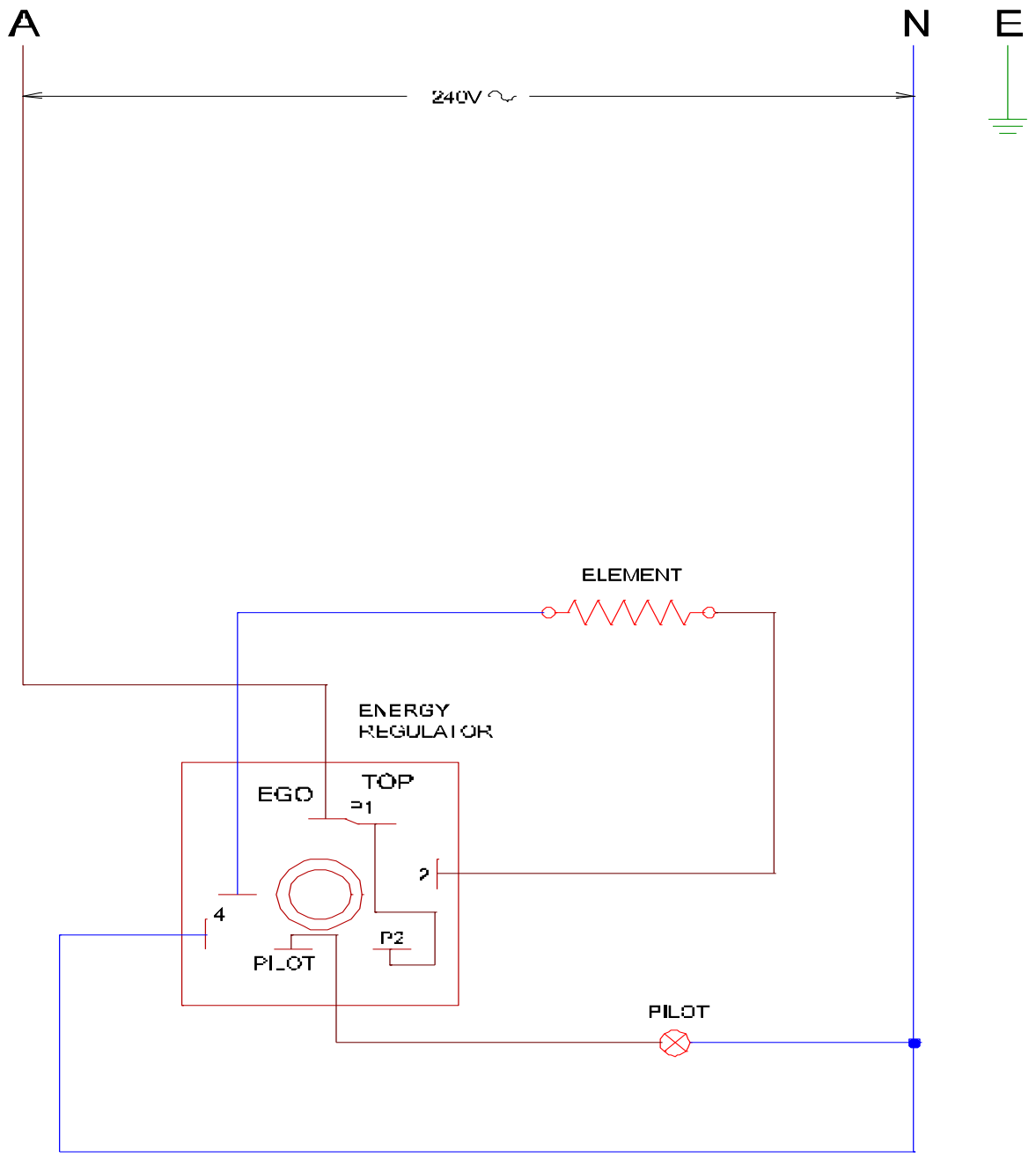

NOTE: This circuit diagram has been provided for reference and to assist qualified service and repair agents only. Under no circumstances should person's not suitably qualified attempt repairs to any electrical equipment.

APPENDIX A

Residual Current Devices (RCD's)

Also known as Earth Leakage Protection systems an RCD is a protective device that automatically disconnects the active conductors of a circuit when an earth leakage current reaches a predetermined value.

Although RCD's are mandatory in domestic installations, and in the final sub-circuits of residential-type areas, the Australian Standards quote that the requirement of an RCD does "not apply to a socket-outlet…..for the connection of fixed electric cooking appliances, such as ranges, ovens or hotplates"

In installations that are neither Domestic nor Residential-type, AS/NZS 3000 2.5.3.3 states that RCD's are needed only in situations where equipment may represent an increased risk of electric shock to the user.

AS/NZS3000 2.5.2 gives the following warnings that should have been taken into consideration when an RCD circuit was installed.

> *To avoid unwanted tripping due to leakage currents and transient disturbances, care should be taken to ensure that the sum of the leakage currents of electrical equipment on the load side of an RCD is less than 1/3 of its rated residual current.*
>
> *To avoid excessive leakage current causing unwanted tripping where socket-outlets are protected by one RCD having a rated residual current not greater than 30mA, consideration should be given to the number of socket-outlets protected and the nature of electrical equipment likely to be connected to the socket-outlets.*

Tubular elements (such as those used in this unit) reaching temperatures greater than 110°C are subject to moisture absorption and therefore earth leakage current generation. Should the installation and use of this unit trip an RCD the unit will need to be run on a circuit without an RCD (as mentioned above) for approximately 30-60 minutes, after which time the elements should have dried out and the machine should function normally. If you are unable to locate a circuit without an RCD please contact your supplier, or if you prefer you can contact Roband and send the unit to one of our offices where we can run the machine on a suitable circuit free of charge (a return freight charge may apply).

NOTES

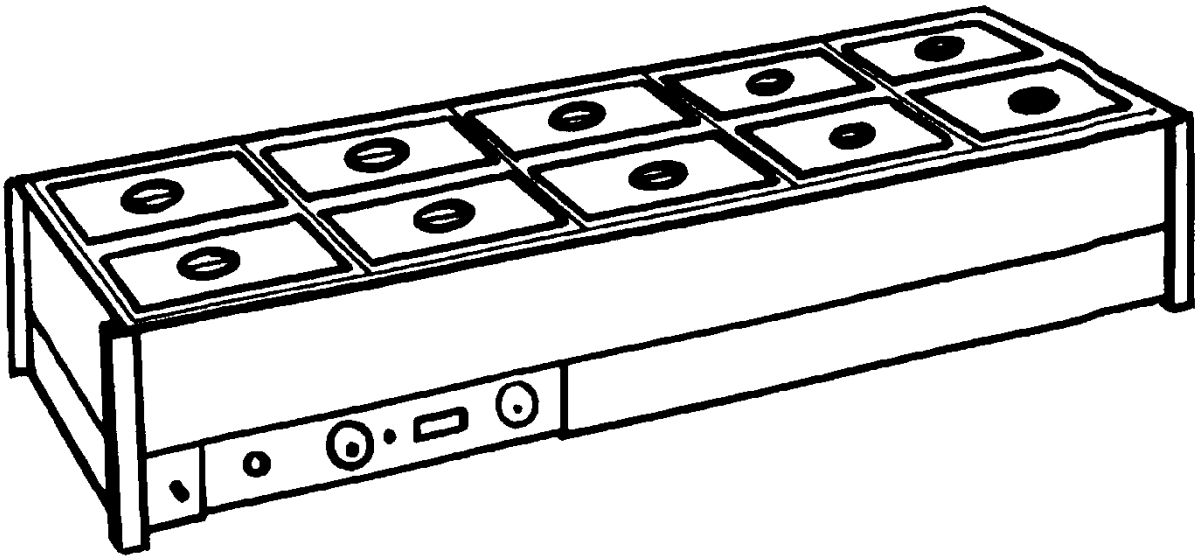

WARRANTY

Every care is taken to ensure that no defective equipment leaves our factory and all goods manufactured by us are guaranteed against defective workmanship and materials for a period of 12 months from the date of purchase. Roband Australia's obligations pursuant to this express warranty being limited to the repair or replacement of the defective goods or materials, at is option and subject to the terms contained within this Warranty statement. Where relevant, glass, Teflon® and lamps are **not** included in this warranty and RCD tripping due to moisture absorption by Tubular Heating Elements is not considered a warranty fault.

Generally, all goods claimed under this warranty must be returned to the factory or an authorized service agent, freight prepaid, for inspection. All parts deemed to be defective will be replaced, however, no claims will be entertained for second hand products, or parts damaged in transport, misused or modified in any way without our approval. For machines that are not considered to be portable (e.g. food bars, rotisseries, large hotplates and some bain maries), on site warranty service will be provided in capital city metropolitan areas only. In all other locations, the customer is responsible for all travelling time/service call costs and payment for this will be required prior to the commencement of the repair. The labour costs to actually repair the fault will be met by the company.

Any repairs or replacement of defective goods or materials pursuant to this warranty, must be authorized by Roband Australia prior to any action being taken. The company reserves the right to reject a claim for warranty if it is not completely satisfied with the circumstances under which it occurred and any other costs incurred for false claims or faults due to incorrect usage etc. are the responsibility of the claimant. Roband Australia Pty Ltd nor any subsidiary company or Agent shall be liable for loss of profit or damage to other equipment and property except where it is in breach of the guarantees provided in accordance with Schedule 2 of the Competition and Consumer Act 2010 (Cth) or the applicable legislation from time to time.

The goods come with guarantees that cannot be excluded under the Australian Consumer Law (ACL). You are entitled to a replacement or refund for a major failure and for compensation for any other reasonably forseeable loss or damage. You are also entitled to have the goods repaired or replaced if they fail to be of acceptable quality and the failure does not constitute a major failure.

Generally, authorized service agents are located in all areas which have authorized distribution dealers. For the name of your nearest Australian authorised service agent, please contact:

Roband Australia Pty Ltd

1 Inman Road, Cromer, NSW 2099

Warranty Number: 1800 268 848

Phone: (02) 9971 1788 Fax: (02) 9971 1336

All other countries please contact your selling Agent.

Please complete the following details and keep this card in a safe place.

NAME_____

ADDRESS_____

MODEL No:_____SERIAL No: _____DATE PURCHASE_____

NAME OF DEALER:_____

PLEASE RETAIN THIS SECTION FOR YOUR RECORDS

DO NOT POST

ROBAND® AUSTRALIA PTY LTD

OTHER LEADING PRODUCTS AVAILABLE:

Sycloid Toaster

DRINK MIXERS

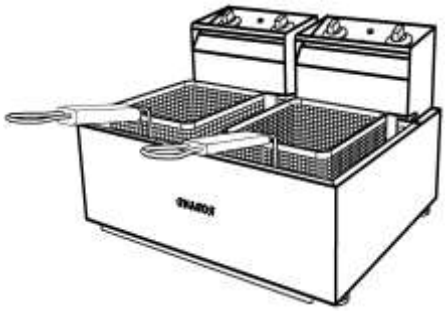

HIGH PERFORMANCE DEEP FRYERS

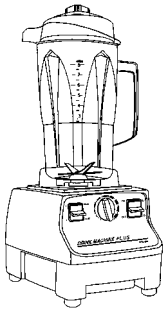

VITAMIX BLENDERS

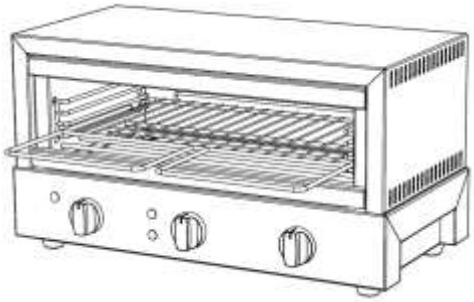

GRILLMAX TOASTERS

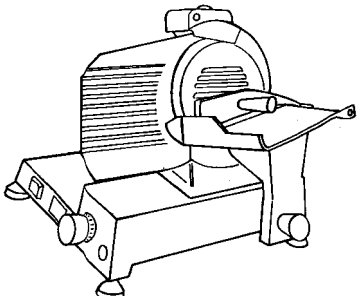

NOAW Slicers

Manufactured/Imported in Australia by:

ROBAND AUSTRALIA PTY LTD

Authorised Distributor/Agent