Jomack

Food Steamer Extension (FS3)

High quality highly polished stainless steel
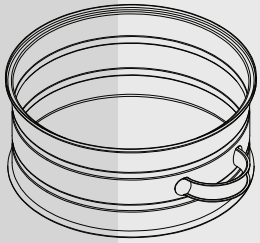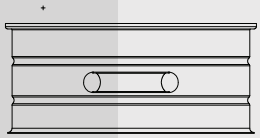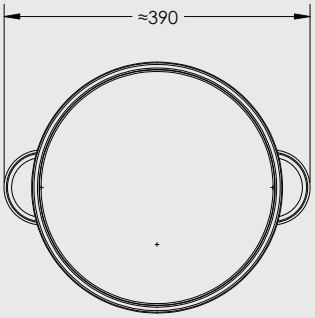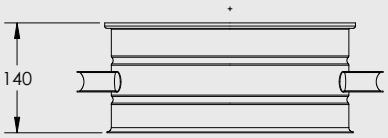
Easy clean