www.santos.fr

SANTOS®

"Classic" Citrus Juicer n° 11

The genuine commercial citrus juicer since 1954

For all citrus fruits :
Limes, lemons, oranges, Grapefruits.

Delivered with 3 removable squeezers (cones).

Ideal for hotels, bars, restaurants.

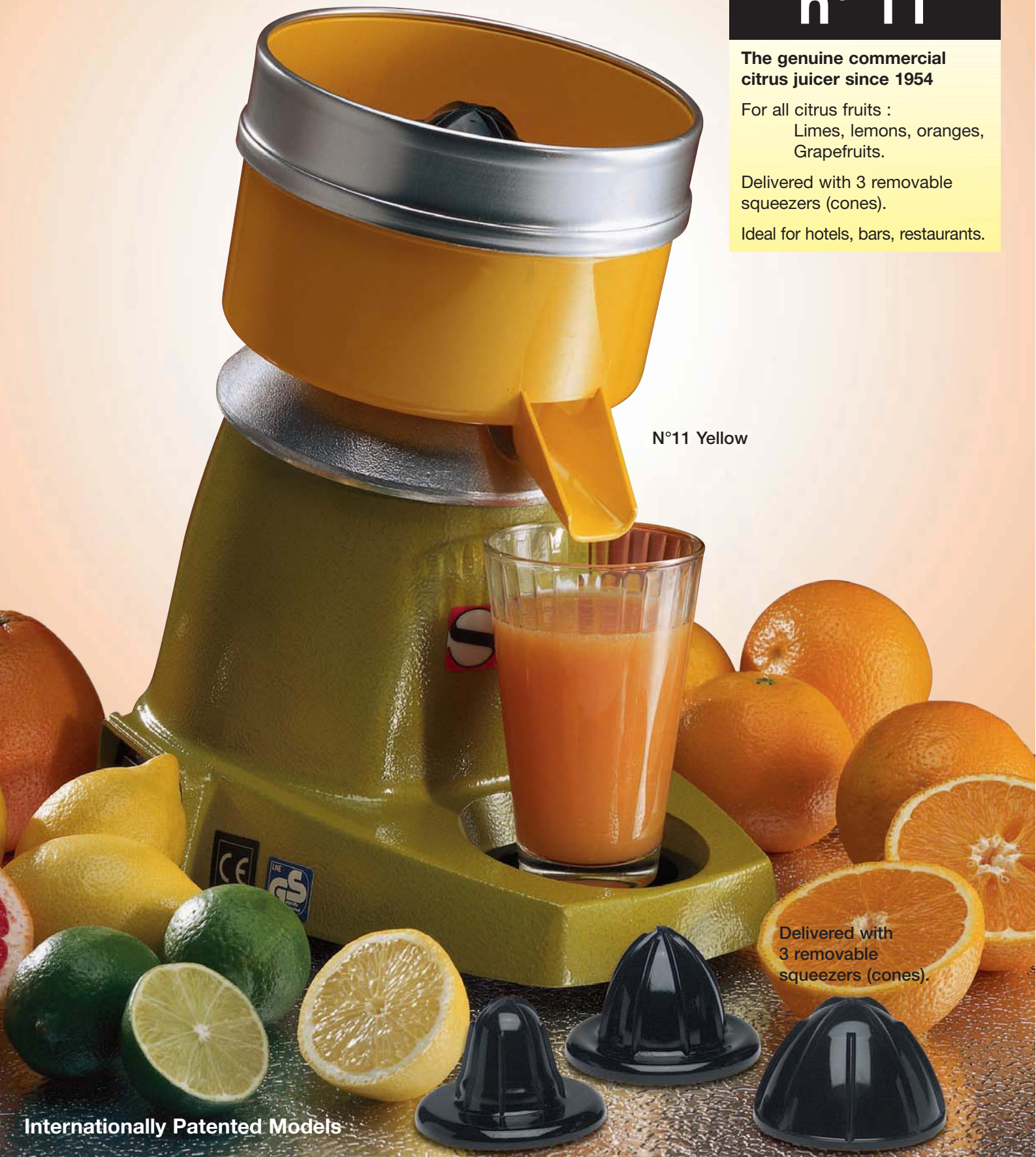

Internationally Patented Models

"Classic"

Since 1954

The original commercial juicer, built to last, with a heavy duty and quiet asynchronous motor, for use everywhere you need fresh squeezed citrus juice : Juice Bars, Health Food Stores, Hotels, Bars, Restaurants, Cafeterias, Ice Cream Shops, Institutions, Hospitals and even … at Home.
Easy to use, easy to clean, completely safe.
High output : just cut your citrus fruit half and press. You will extract easily from 20 to 40 litres per hour (5 to 10 gallons).

Metallic ring

Removable bowl yellow or black.
Unbreakable - food material (NSF approved) - dishwasher proof.

Removable pips filter grid (inside)

Heavy and unbreakable metallic motor base
Chromed or painted (yellow or gray).

Inclined body for better output

ON/OFF waterproof switch

3 removable squeezers (cones) for :
- ✓ Limes
- ✓ Lemons
- ✓ Oranges
- ✓ Grapefruits

Wide spout accepting all types of glasses :
Height of the spout :
- ✓ 125 mm (5")

Heavy duty and quiet asynchronous motor.
High speed - Single phase
100-120V 50/60Hz 155 W
220-240V 50/60Hz 130 W

Removable polycarbonate drip tray.

Non slip rubber feet
High stability

N°11 C Chromed

N°11 Yellow

N°11 Gray

Juicer n°11

www.santos.fr

Assembly / disassembly / cleaning

The unique juicer that you can clean rapidly and easily :
just wash the main different parts of the top.
All are easily removed from the base in a simple movement.
(NSF approved)

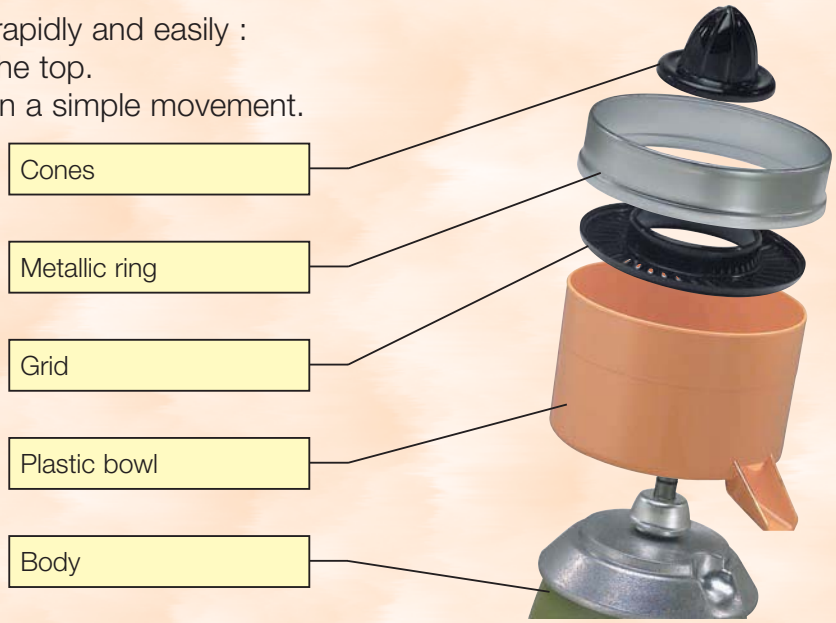

Technical specifications

Motor			
Single phase	100-120V - 50/60 Hz - 155 W 220-240V - 50/60 Hz - 130 W		
Speed	1800 RPM (60 Hz) 1500 RPM (50 Hz)		
Weight	**Net weight**	5 Kg	(11 lbs)
	Packed	5.6 Kg	(12 lbs)
Dimensions	**Juicer**		**Packed (box)**
Height	350 mm (14")		400 mm (16")
width	200 mm (8")		255 mm (10")
Depth	300 mm (12")		340 mm (13")
Height of the spout	125 mm (5")		
Shipping cube :			0.035 m3 (1.2 cubic feet)

Safety - Standards - Hygiene

This Juicer has been designed to comply with the most severe international safety and hygiene regulations in conformity with the standards, especially :

- Machinery directive 98/37/EC
- Electromagnetic compatibility 89/336/EEC
- Electrical equipment designed for use within certain voltage limits "law voltage" 73/23/EEC
- Harmonized European standards EN 292-1 and 2 - EN 60204-1 : 1998
- CE European standards
- GS (Germany) controlled by LNE laboratory
- NSF (USA)

Electrical safety

- On/Off interlock switch is waterproof
- All mechanical parts are ground (earth) connected
- All equipment is perfectly controlled after assembly (special electrical testing bay)

Thermal safety

Motor protected by internal thermal detector.

Acoustic safety

The asynchronous motor with direct drive is particularly silent

Hygiene

All removable parts can be put in a dishwasher or easily cleaned with hot soapy water (NSF approved).

"Classic" Citrus juicer n°11

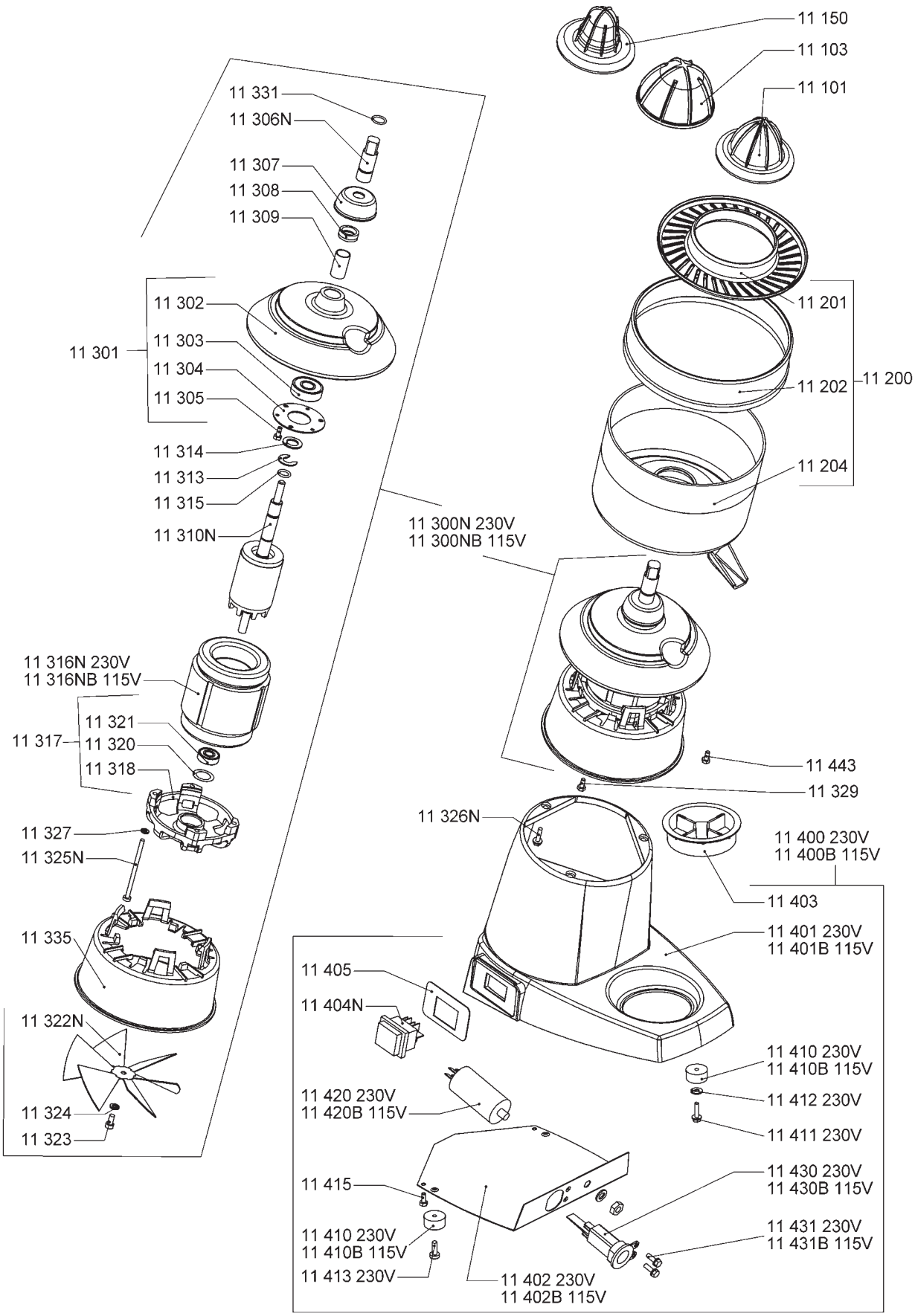

140 - 150, AVENUE ROGER SALENGRO - 69120 VAULX-EN-VELIN - LYON - FRANCE - TÉL. 33 (0) 472 37 35 29 - FAX 33 (0) 478 26 58 21
INTERNET : www.santos.fr - E-mail : santos@santos.fr

Imprim'éole 07/03