Proudly Distributed By

ROBAND AUSTRALIA PTY LTD

OPERATING INSTRUCTIONS

RICE COOKER

Models	**SW5400**	**Version 3**
	SW6000	**Version 3**
	SW10000	**Version 1**

Special Features

- Easy One Touch Operation
- Automatic Shutoff And Warming Functions
- Large Serving Quantities
- Burn-proof pad helps to prevent rice burning onto bowl
- Overheat protection

These instructions cover the models of **Robalec™** Rice Cookers only. Although there are slight variances between models, the installation, operation, care and maintenance procedure is the same for all.

18/06/2014

Roband® Australia is a wholly Australian owned company and has been manufacturing quality commercial catering equipment for the food service industry for more than 50 years. Roband products are engineered and manufactured to the highest standards to provide functionality, reliability and durability, and our quality products are exported world-wide.

Included in the comprehensive Roband® range are Toasters, Fryers, Milkshake Mixers, Rotisseries, Food Display Cabinets and much more.

Roband® Australia also acts as the Australian agents for Vitamix® Blenders, Noaw® Meat Slicers, Ryno® Stainless Benching, Ceado Juicers, Förje® Cookware, Robalec™ Soup/Rice Warmers, Robatherm Urns, Austheat® Fryers, Dipo Induction & Autofry Machines. Roband also has its own line of commercial cookware and cutlery under the Robinox® brand name.

For a complete set of brochures please contact your nearest authorised dealer or contact Roband directly at our head office.

Roband Head Office
Sydney, Australia

Roband Australia Pty Ltd	**Tel:**	+61 2 9971 1788
1 Inman Road	**Fax:**	+61 2 9971 1336
Dee Why NSW 2099	**Email:**	sales@roband.com.au
AUSTRALIA	**Web:**	www.roband.com.au

International Agents
For additional agents please email Head Office

Cyprus:	United Catering Equipment Supplies Ph: +357 777 777 24	**Singapore:**	Jelco Private Ltd Ph: +655 611 988
Fiji:	Hotel Equipment Ltd Ph: +679 672 0666	**Switzer-land:**	Burgi Infra Grill Ph: +41 418 554 552
Hong Kong:	Chung Wah Kitchen Machine Ltd Ph: +852 2334 5411	**Thailand:**	Seven Five Distributors Co Ltd Ph: +662 866 5858
Malaysia:	Allied Food Equipment Ph: +603 9133 5833	**United Arab Emirates:**	Boncafe Middle East LLC +9714 282 8742
Maldives:	Radiant Heat Maldives Pty Ltd Ph: +960 333 4845	**United Arab Emirates:**	Nisa Trading LLC +9714 396 6132
New Zealand:	Roband New Zealand Ph: +649 274 1354	**United Kingdom:**	Metcalfe Catering Equipment Ph +44 1766 830 456
Noumea:	Comptoir Materiel Professionnel Ph: +687 28 50 43	**USA:**	Condon & Fisher International Ph: +1 508 361 9226
Noumea:	CHR Import Ph: +687 92 83 79		
Papua New Guinea:	Brian Bell & Company Pty Ltd Ph: +675 325 5411		

© Copyright 2013 – Roband® Australia Pty Ltd

All rights reserved. No part of this work may be reproduced or copied in any form or by any means, electronic or mechanical, including photocopying or posting to a website, without the written permission of the publisher. The material contained within this document is intended entirely for instructional purposes.

CONTENTS

INTRODUCTION 1
GENERAL PRECAUTIONS 1
PACKAGING 2
COMPLIANCE 2
INSTALLATION 3
OPERATION 3
COOKING SUGGESTIONS 5
GENERAL SAFETY 6
CLEANING, CARE & MAINTENANCE 7
TROUBLESHOOTING 8
SPECIFICATIONS 9
CIRCUIT DIAGRAM 10
WARRANTY 12

INTRODUCTION

Congratulations on your purchase of this quality **Robalec™** product. With proper care and management your new purchase will give you years of trouble free service.

By reading these instructions carefully you can ensure that this machine is used and maintained properly, helping your new investment to perform well for you now, and to continue performing in the many years to come.

GENERAL PRECAUTIONS

This machine must only be operated by qualified person(s) who are fully versed in the operating and safety instructions described in this manual. Operators should be instructed to familiarise themselves with any and all safety instructions described in this manual prior to commencement of any maintenance or service.

These machines are heating units, and as with any commercial heating unit the surfaces will get hot. Always be careful when near an operating Rice Cooker, and ensure that any risk to unwary customers or staff is minimised with additional signage if necessary. Due to the obvious heat hazard Roband recommends that these units be kept out of reach of children.

In the case of new personnel, training is to be provided in advance. These machines should not be operated by persons (including children) with reduced physical, sensory or mental capabilities, or lack of experience or knowledge, unless they are being supervised or being instructed concerning the safe use of the appliance by a person responsible for their safety.

The machine should be disconnected from all power and allowed to cool before cleaning. Any damaged plug or cord should be replaced before further use.

These machines should not be cleaned with the use of a spray applicator, water jet or any other method except those outlined in the Cleaning & Care section of these instructions.

Roband will accept no liability if;

- Non-authorised personnel have tampered with the machine.
- The instructions in this manual have not been followed correctly.
- Non-original spare parts are used.
- The machine is not cleaned correctly, with the right product.
- There is any damage to the unit.

PACKAGING

All care is taken when packing and Roband ensures that every unit is functional and undamaged at the time of packaging.

The Package of this Rice Cooker should include:

1) One Rice Cooker
2) One Large Measuring Container
3) Burn proof pad
4) Serving Implement
5) This Manual
6) Packaging Materials

Any damage to the machine as a result of freight must be reported to the Freight Company and to the agent responsible for the dispatch of said unit within 24 hours of receipt. No claims will be accepted or entertained after this period.

CE COMPLIANCE

C-Tick:

Robalec™ products have been designed and manufactured to comply with any and all specifications set out by the Australian Communications Authority (ACA) in regards to Electromagnetic Compatibility. As testament to such compliance these units bear the C-Tick symbol.

For further information contact the Australian Communications Authority, PO Box 13112, Law Courts, Melbourne VIC 8010.

CE:

Roband® products bearing the CE compliance mark have been designed and manufactured to comply with European Standards and Directives. A copy of the CE Declaration of Conformity is located at the back of these instructions.

INSTALLATION

- Remove all the packaging materials and tape. Clean off any glue residue left over from the protective plastic using methylated spirit.
- Place the Rice Cooker on a firm, level surface in the required position. Before connecting the Rice Cooker to the power supply, ensure that all the controls are in the "OFF" position.
- Plug the Rice Cooker into a 10 Amp power point (SW5400 & SW6000) or 15 Amp power point (SW10000). Be sure not to overload the power circuit by operating too many machines together.
- National Standards exist outlining the positioning, spacing and ventilation requirements when installing new appliances. These Standards should be consulted and new equipment should be installed accordingly. In any situation where specifications allow a distance of less than 100mm we would still recommend that a well-ventilated air gap of not less than 100mm be maintained. If the machine is near particularly heat-sensitive materials common sense should be employed in determining sufficient distancing.

OPERATION

The Rice Cooker is controlled by a Cook/Warm switch located on the side of the machine. A pilot light beside the switch is illuminated when the Rice Cooker is cooking. When the Rice Cooker has reached the set temperature, the machine automatically stops cooking and warming begins. The cooking light goes out and the warming light will turn on. To operate the Rice Cooker, follow the procedure below.

IMPORTANT

The proper operation of the rice cooker relies on the bowl being in good condition. If the bowl is dented in any way, poor contact is made between the hot plate and bowl. This will increase the cooking time and can cause serious damage to the machine. **Be careful when handling the bowl as to prevent dings and scratches.**

Note: *As soon as power is applied to the rice cooker, the warming function is enabled. Although this is low power, heat is still generated inside the machine.* ***The rice cooker should never be left on without the bowl (containing rice) inside the machine for longer than 5 minutes.***

- Fill the plastic measuring container provided to the desired level. The plastic container makes approximately 5 portions of cooked rice, where a portion of rice is defined as 150ml (water measurement) of raw rice
- It is recommended to wash the raw rice in a strainer until the waste water runs clear (see *Cooking Suggestions* for more details).
- Unplug the Rice Cooker power cord from the wall socket and remove the bowl from the unit. Inspect the condition of the bowl for dents. If dents exist, do not

use this bowl for cooking rice. Remove any foreign objects from the bowl and heating plate. **NOTE: this step is important to the operation of the rice cooker. Foreign objects between the bowl and heating plate can damage the machine.**

- Add water to the rice. Generally, add equal portions of water to rice. However, experience should dictate the amount of water to be added (see *Cooking Suggestions* for more details*)*.

  ⇒ **SW5400 and SW6000:** Clean the burn-proof pad and place it at the bottom of the bowl. Smoothly pour the washed rice into the bowl. Do not allow the burn-proof pad to float in the rice.

  ⇒ **SW10000:** Clean the rice napkin and lay it into the bottom of the bowl. Once the rice and water have been added fold the rice napkin over to cover the raw rice.

- Dry the outside of the bowl, especially the bottom and reinspect for any objects stuck to the outside of the bowl.
- Dry the inside and outside of the cooker.
- Place the bowl into the cooker. Rotate the bowl to the left and right to ensure that the bowl is properly placed above the heating plate.
- Insure all liquid stays inside the rice bowl and doesn't enter the outer pot.
- Place/close the lid on the rice cooker.
- Plug the Rice Cooker into the power point.
- Press the Cook/Warm switch down. The "cook" indicator light will turn on. When the cooking time is finished the switch will automatically pop up and the "warm" indicator light will turn on.
- For best results, do not open the cooker's lid. Let the steam continue to cook the rice for another 15 minutes to improve flavour. Then serve.

H HAZARD

Open the lid (being careful to avoid the steam that will rise out of the unit) and immediately stir the rice. Be careful when handling the rice. The product and machine components will be hot and could cause burns.

- When removing the rice from the bowl, **DO NOT BANG THE BOTTOM OF THE BOWL**. This can easily damage the bowl which can create air gaps between the bowl and plate. These air gaps produce localised hot spots and can potentially damage the machine (see *Cleaning, Care and Maintenance* for more details).
- If all of the rice from a batch is to be removed and used immediately, **switch off the machine at the wall socket** and allow the unit to cool for 10-15 minutes before filling and cooking a further batch of rice.

For the SW5400 and SW10000 models, although the Rice Cooker has a warming cycle, the power and insulation is not sufficient to hold large quantities of rice for any extended duration.

In hot weather the warming cycle performs much better than in cold temperatures. The warming cycle is only designed to assist for short periods in businesses where at least half of the rice is to be used immediately after cooking and the remainder used fairly quickly thereafter.

If full loads of rice are to be kept warm for any length of time greater than 15 - 20 minutes, it is recommended that the SW6000 unit be used instead. The SW6000 model is insulated and has a sealed lid. This keeps the rice warm for periods up to 6 hours and prevents the rice from drying out quickly.

The SW6000 has a condensation catchment container located under the lid hinge. This container should be observed when cooking rice and emptied when full. **Be care full when empting the container as the water may be hot.**

COOKING SUGGESTIONS

- Prior to cooking, place the raw rice into a strainer and wash gently in warm water. Do not scrub with force. Wash the rice until the waste water runs clear.
- After the rice is washed it should be immersed in water for some time to improve the flavour and aroma. Usually 30 minutes is adequate, but may take up to 1 hour in winter.
- Determining the required quantity of water used to cook the rice varies due to a number of factors such as the variety and quantity of rice. It is recommended that one of the provided plastic containers full of rice should require 1 to 1.2 containers full of water although this should be verified on a case by case basis. It may be necessary to adjust to amount of water to improve the cooking results.
- Rice and water can be added to the bowl using the provided plastic container which has the portions indicated. Alternatively, reference lines inside the bowl can be used.

SAFETY

GENERAL SAFETY

This machine contains no user-serviceable parts. Roband Australia, one of our agents, or a similarly qualified person(s) should carry out any and all repairs. Any repair person(s) should be instructed to read the Safety warnings within this manual before commencing work on these units.

- Do not remove any cover panels that may be on the machine.
- This unit can get very hot, ensure everyone is aware that the machine is operating and take care to avoid contact with hot surfaces.
- Always ensure the power cable is not in contact with hot parts of the machine when in use.
- Ensure that any damaged power cord is replaced before further use.
- Keep out of reach of children.
- Do not immerse the unit, cord or plug in any liquid.
- Do not share the power point with another machine.
- Do not operate unit if it malfunctions or suffers serious damage.

CLEANING, CARE & MAINTENANCE

Attention to regular care and maintenance will ensure long and trouble free operation of your Rice Cooker. Although scheduled servicing is not required we do recommend you adopt a program of regular maintenance to ensure that the Rice Cooker is clean and functional and to avoid inadvertently damaging the unit.

The bowl has a non-stick coating on the inside. Do not use metal implements as they will damage the coating which can cause rice to stick to the bowl and burn.

Daily cleaning should be considered mandatory for all cooking equipment. In order to ensure the proper cleaning and to avoid damage to the Rice Cooker the instructions below should be followed.

- Ensure power to the unit is off, the Rice Cooker is unplugged and cool before attempting to clean any part of the machine.
- **Do not** immerse the Rice Cooker in water. Wipe the outside of the Rice Cooker down using a **damp** sponge or cloth.
- To clean the bowl, soak it in hot soapy water and **gently** clean the bottom with a cloth. **Caution:** do not press down too hard when cleaning, or drop anything onto the bottom of the bowl, as this can cause warping and inhibits the proper functioning of the rice cooker.
- Wipe the cooker body and bowl dry before storing.
- **Do not** clean this unit with the use of a water jet.

IMPORTANT

It is important that the rice bowl is kept in good condition and the bowl and heating plate surface is free from foreign debris. If the bowl is dented or foreign debris lies between the bowl and heating plate, isolated hot spots can occur in the heating plate, creating the potential to cause serious damage to the unit.

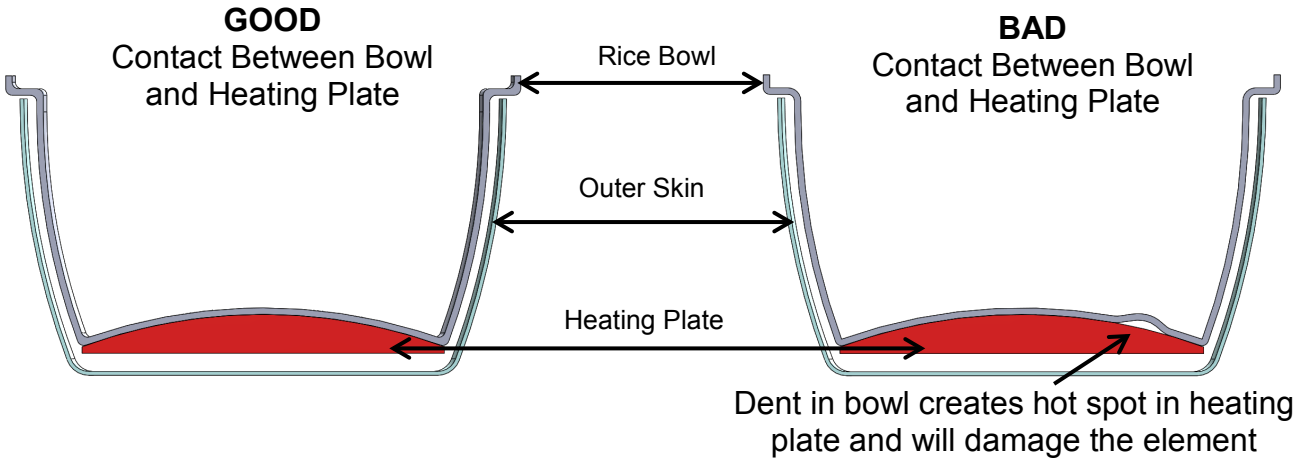

If the bowl has been dented or an obstruction exist between the bowl and heating plate, the Rice Cooker is fitted with a power cut-out device to protect the machine (see *Troubleshooting* for information regarding the Self-holding Thermal Limiter).

TROUBLESHOOTING

The pilot lights indicate when the rice cooker is cooking and warming. If this does not light up when switched on and the water is not heating check the following before calling for service.

√ The machine is plugged in correctly and the power is switched on.

√ The power point is not faulty, and that the circuit has not been overloaded by other machines.

√ The Overheat Protection system may have tripped. When a critical temperature inside the machine is reached, a thermal limiter will disconnect power to the cooker. The thermal limiter is likely to trip for these reasons:

- The bowl is not making good contact to the heating plate due to an obstruction or dented bowl.
- The Rice Cooker has been continuously cooking without sufficient time to cool down between cook cycles.

⇒ **SW5400 and SW6000**: The thermal limit switch has an auto reset function. To reset, **UNPLUG** the machine from the wall and let it cool down to room temperature. Remove the bowl and inspect for any damage or dents. Also check that there is nothing obstructing the bowl from making contact to the heating plate. After the machine has been **UNPLUGGED** from the wall and had time to cool, the thermal limiter will automatically reset, allowing further operation of the rice cooker. **Note:** The machine must be unplugged for at least 2 minutes whilst the machine is cold to reset.

⇒ **SW10000**: The thermal limit is a fuse that must be replaced. Please contact technical support.

√ Check for objects caught between the Rice Bowl and the heating plate.

√ Make sure that the Rice Bowl is seated correctly inside the cooker body, to ensure proper contact with the heating plate.

√ Make sure that the cook switch has been pressed into the down position and the light indicates the rice cooker is cooking.

√ Never use any Rice Bowl from another brand or model of rice cooker. Using another Rice Bowl will damage the Rice Cooker. Damage caused by using another Rice Bowl is not covered by the warranty.

Only after all these points have been checked should you call for service.

SPECIFICATIONS

Model	SW5400	SW6000	SW10000
Voltage	230VAC		
Power Consumption	1850W	1850W	3450W
Power Point Type (Australia)	10A	10A	15A
Diameter (Nominal)	370 mm	470 mm	530mm
Height (Nominal)	360 mm	360 mm	390
Capacity	5.4L	6.0L	10.0L
Capacity - No. of Provided Containers (MAX)	6	7	11
Number of Cooked Rice Portions (MAX)	30	35	55

Constant research and development may necessitate specification changes at any time.

CIRCUIT DIAGRAM

SW5400 and SW10000

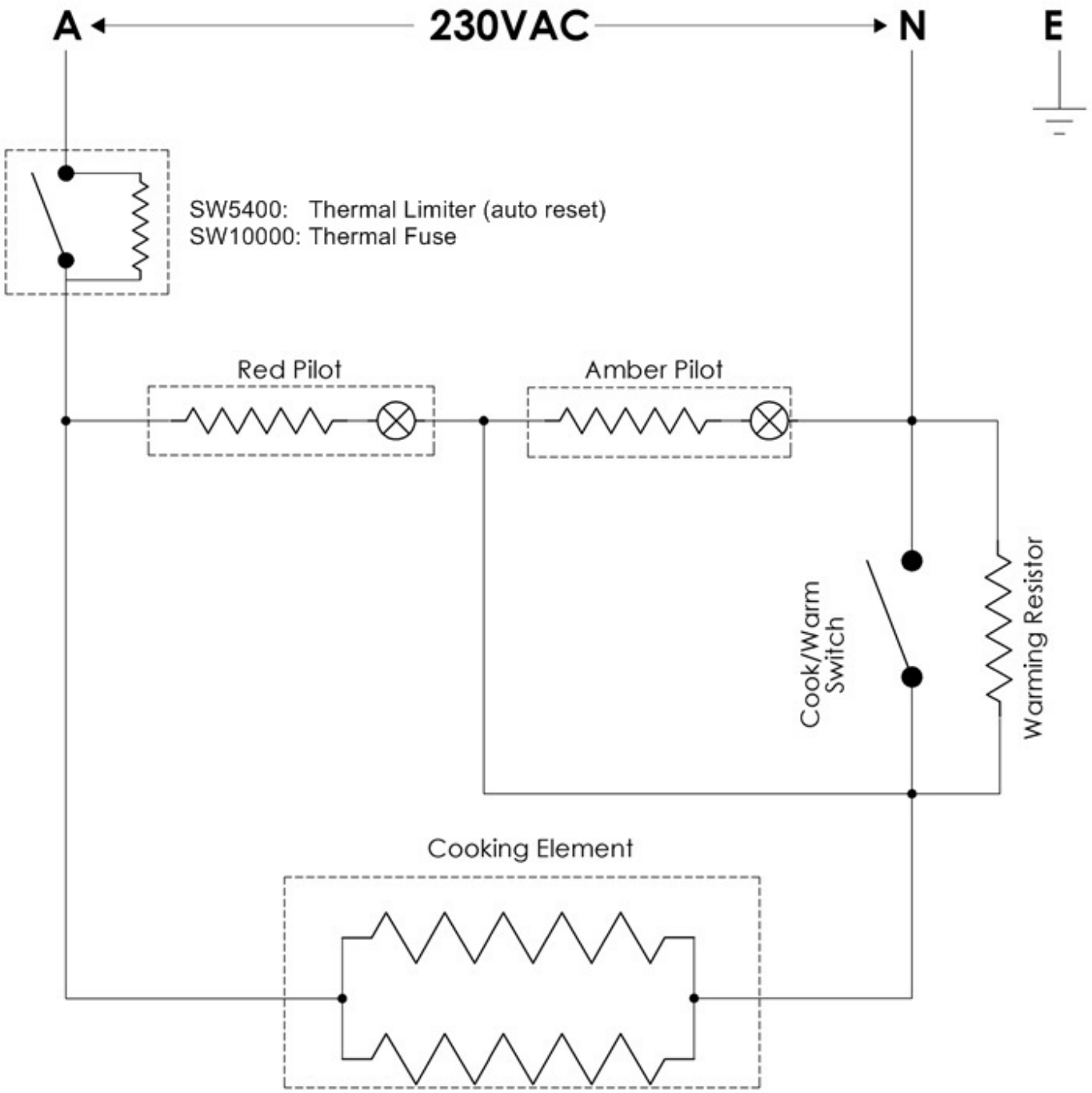

SW6000 Circuit Schematic

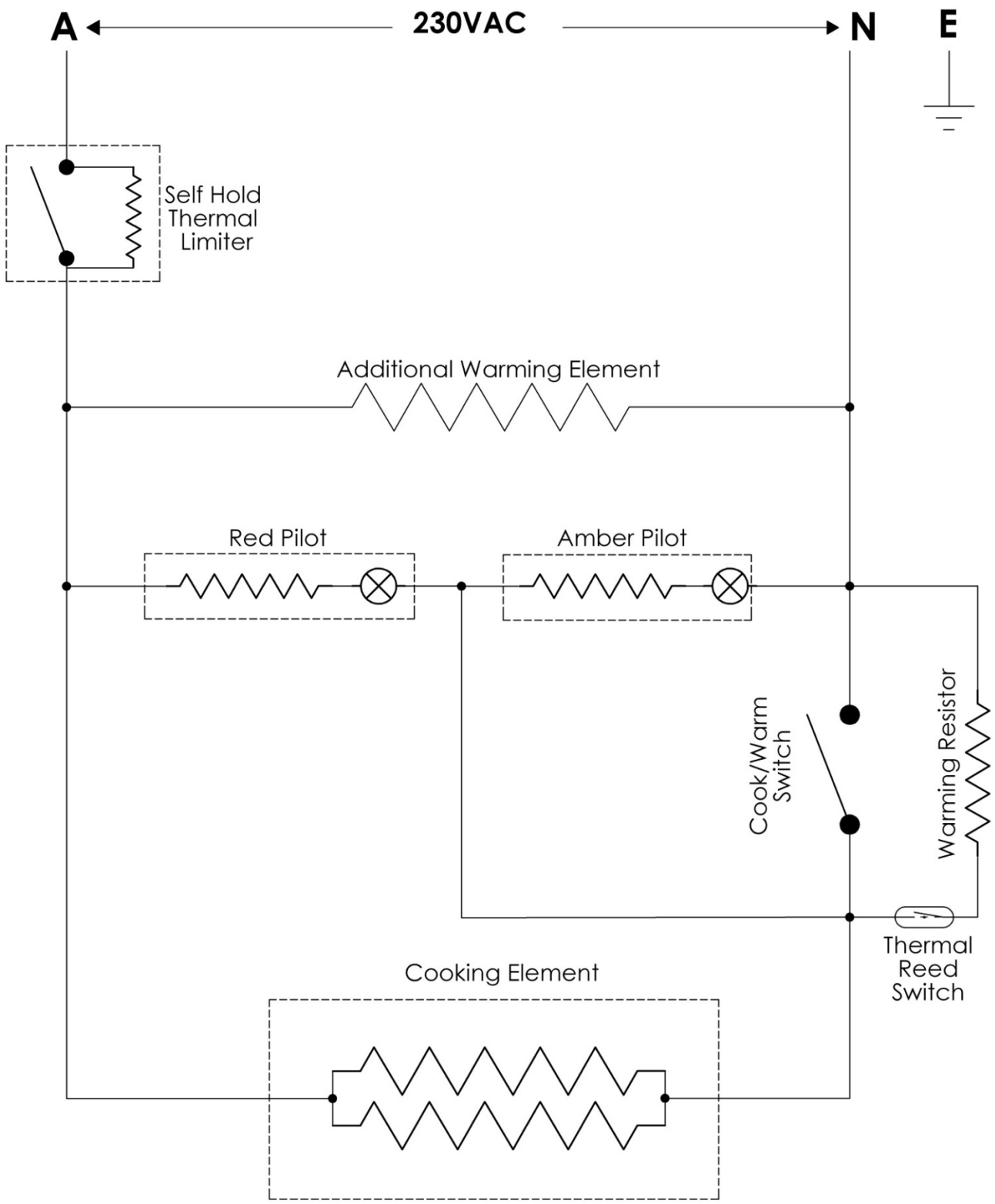

NOTE: This circuit diagram has been provided for reference and to assist qualified service and repair agents only. Under no circumstances should persons not suitably qualified attempt repairs to any electrical equipment.

WARRANTY

Every care is taken to ensure that no defective equipment leaves our factory and all goods manufactured by us are guaranteed against faulty workmanship and materials for a period of 12 months from the date of purchase. Glass, lamps and Teflon coatings are **NOT** included in this warranty. Generally, all goods claimed under this warranty must be returned to the factory or an authorised service agent, freight prepaid, for inspection. Any part deemed to be defective will be replaced, however, no claims will be entertained for parts damaged in transport, misused or modified in any way without our approval. For machines that are not considered to be portable (e.g. food bars, rotisseries, large hotplates and some bain maries), on site warranty service will be provided in capital city metropolitan areas only. In all other locations, the customer is responsible for all travelling time/service call costs and payment for this will be required prior to the commencement of the repair. The labour costs to actually repair the fault will be met by this company.

This company reserves the right to reject a claim for warranty if it is not completely satisfied with the circumstances under which it occurred and any costs incurred for false claims or faults due to incorrect usage etc. are the responsibility of the claimant. Under no circumstances shall Roband® Australia Pty Ltd or any subsidiary company or Agent be liable for loss of profit or damage to other equipment and property.

Generally, authorised service agents are located in all areas, which have authorised distribution dealers. For the name of your nearest Australian authorised service agent please contact:

ROBAND® AUSTRALIA PTY LTD

Warranty Number:	1800 268 848 (for Australian Residents)
Phone:	+61 2 9971 1788 Fax: +61 2 9971 1336
Email:	Warranty@roband.com.au

All other countries please contact your selling agent.

Please complete the following details and keep this card in a safe place.

NAME_____

ADDRESS_____

MODEL No:_____SERIAL No: _____DATE PURCHASE_____

NAME OF DEALER:_____

PLEASE RETAIN THIS SECTION FOR YOUR RECORDS

DO NOT POST

ROBAND® AUSTRALIA PTY LTD

OTHER LEADING PRODUCTS AVAILABLE:

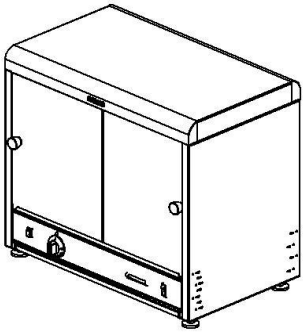

π-PLUS
PIE & FOOD WARMERS

DRINK MIXERS

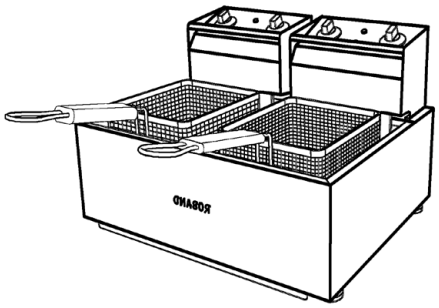

HIGH PERFORMANCE DEEP FRYERS

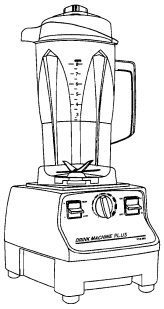

VITAMIX BLENDERS

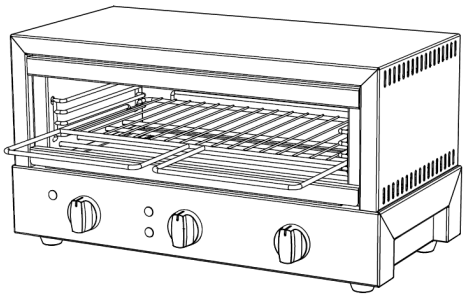

GRILLMAX TOASTERS

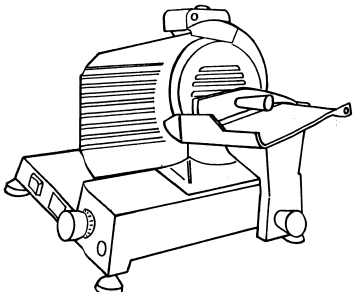

NOAW Slicers

Manufactured/Imported in Australia by:

ROBAND AUSTRALIA PTY LTD

Authorised Distributor/Agent