MAGIC VAC® *Jumbo*

PATENTED

VACUUM PACKING PROFESSIONAL MACHINE

We compliment you on your purchase and thank you for your confidence in us.
You are advised to carefully read these directions, which will enable you to use the MAGIC VAC® *Jumbo* properly and obtain optimal results in terms of food preservation.
Please retain this instruction manual for future reference.

TABLE OF CONTENTS

SECTION 1

OPERATING INSTRUCTIONS and INSTRUCTIONS FOR CLEANING — page

- **APPLIANCE PARTS NAMES — page**
- **CONTROLS AND FUNCTIONS DESCRIPTION — page**
- **IMPORTANT CAUTIONARY NOTES — page**
- **OPERATING INSTRUCTIONS — page**
  - **1 - Positioning the appliance — page**
  - **2 - Turning the appliance on — page**
  - **3 - Settings — page**
    - **3.1 - Setting sealing time — page**
    - **3.2 - Stop/Cancel button — page**
  - **4 - Tips on using bags — page**
  - **5 - Making bags from MAGIC VAC® rolls — page**
  - **6 - Automatic cycle using bags (pre-cut bags; see also section 5.) — page**
  - **7 - Manual vacuum packing cycle in bags — page**
  - **8 - Automatic cycle in containers — page**
    - **8.1 - Vacuum packing in MAGIC VAC® *Executive* containers or with MAGIC VAC® Universal Caps — page**
    - **8.2 Vacuum packing in glass jars — page**
    - **8.3 Vacuum packing with MAGIC VAC® Bottle Caps — page**
  - **9 - Quick marinating — page**
- **INSTRUCTIONS FOR CLEANING — page**
- **TECHNICAL SPECIFICATIONS — page**
- **DECLARATION OF CONFORMITY — page**
- **TROUBLESHOOTING — page**

SECTION 2

INFORMATION ON VACUUM PRESERVATION OF FOODSTUFFS — page

- THE ADVANTAGES OF MAGIC VAC® VACUUM PACKING — page
- STORAGE LIFE WITH MAGIC VAC® — page
- ABOUT VACUUM PACKING — page
- HOW TO PRESERVE FOOD IN MAGIC VAC® BAGS — page
- HOW TO PRESERVE FOOD IN MAGIC VAC® CONTAINERS — page
- POINTS TO REMEMBER — page

MAGIC VAC® AVAILABLE ACCESSORIES — page

APPLIANCE PARTS NAMES

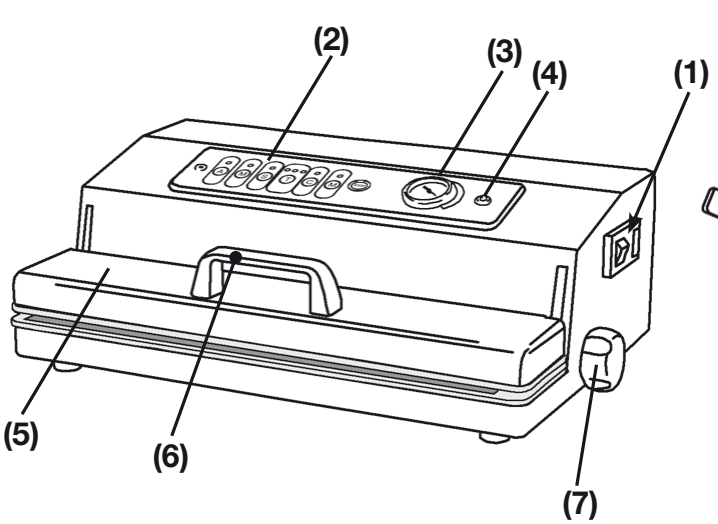

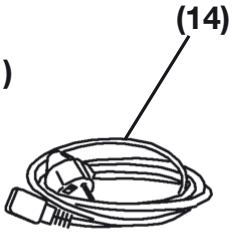

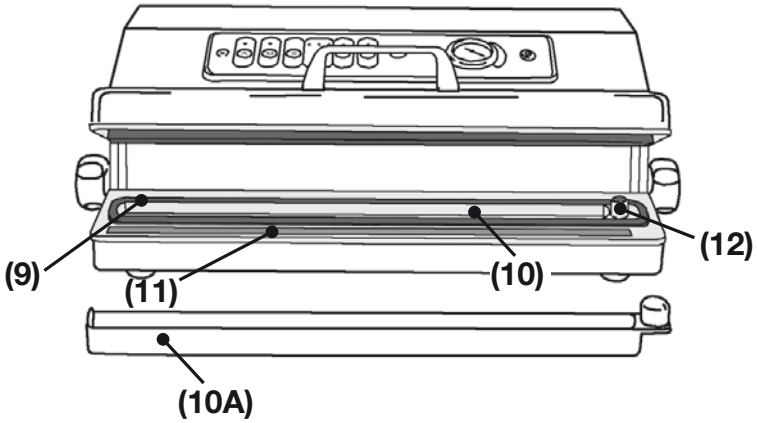

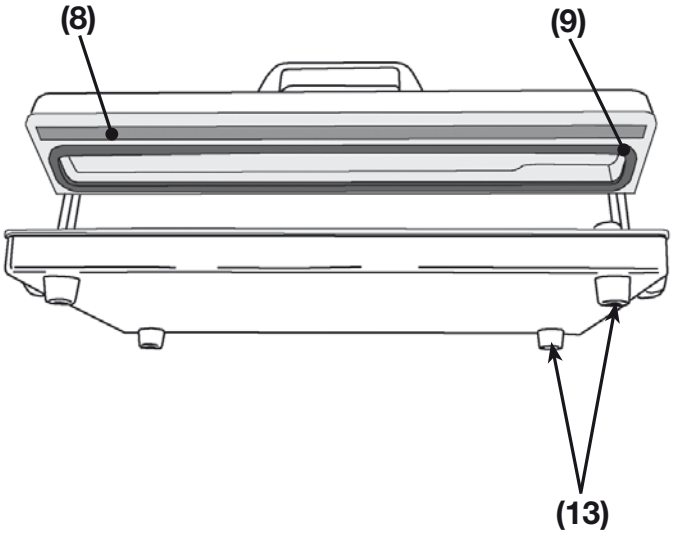

(1) ON (I)-OFF (0)switch - Press (I) to turn on the appliance, keep the switch on OFF(0) when you are not using it.

(2) Controls keyboard - For setting the many functions of the appliance (*).

(3) Vacuum gauge - Mechanically-operated analogue instrument indicating the vacuum value obtained.

(4) Hose air inlet - For connecting the hose to create the vacuum in MAGIC VAC® *Executive* containers, in containers sealed with MAGIC VAC® universal caps, in bottles using MAGIC VAC® bottle caps and in glass jars with lid and ring.

(5) Lid - Opening the lid into the fixed raised position allows you to position the bags before starting the vacuum packing process.

(6) Lid handle - It makes it easier to close the lid before starting the packing cycle.

(7) Patented "Lock & Unlock System" - It locks and releases the bag introduction area, to perform an automatic packing cycle and reduce hands-on time. The Lock & Unlock System is fitted with a gas spring for gentle lid opening.

(8) Sealing gasket - It presses the bag against the sealing bar.

(9) Airtight gaskets - They guarantee that a vacuum will be maintained in the chamber, thus allowing air to be removed from MAGIC VAC® bags.

(10) Vacuum chamber with pull-out tray - For bag positioning and air removal; inside the vacuum chamber the liquid-proof tray is placed **(10A)** which is removable and washable also in dishwasher for maximum hygiene.

(11) Sealing bar with heavy-duty cooling system - Heating element that seals the bag and prevents it from sticking to the bar.

(12) Powder foodstuffs filter - Prevents powder foodstuffs (sugar, flour, coffee, etc.) from entering the pump and causing damage; it can be removed for easy cleaning. The liquid-collecting tray **(10A)** should be pulled out before removing the filter.

(13) Non-slip feet - They prevent the appliance from slipping during use.

(14) Power supply cord - For connecting the appliance to the mains voltage.

(*) CONTROLS and FUNCTIONS DESCRIPTION

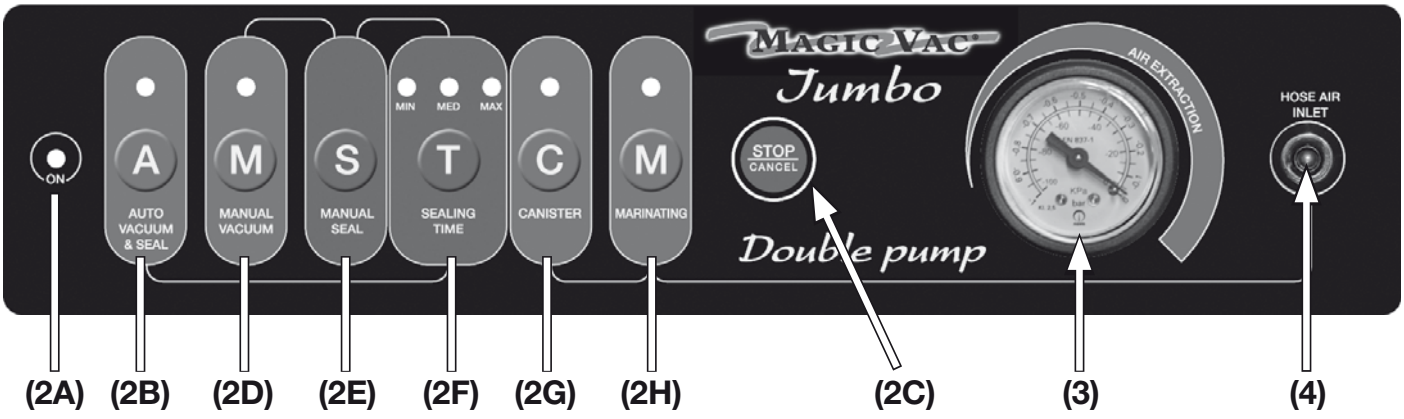

(2A) ON indicator light - When the switch (1) is on I, the indicator light is green.

(2B) "A" (Auto Vacuum & Seal) button - It starts the vacuum packing automatic cycle with final sealing of the bags.

(2C) STOP/CANCEL button - It stops the appliance at any time.

(2D) "M" (Manual Vacuum) button - It starts the manual cycle; the appliance will continue drawing out air until the S button is pressed to start manual sealing.

(2E) "S" (Manual Seal) button - It starts manual sealing.

(2F) "T" (Sealing Time) button - For selecting sealing time.

(2G) "C" (Canister) button - It starts the automatic vacuum packing cycle in MAGIC VAC® *Executive* containers, in containers sealed with MAGIC VAC® universal caps, in bottles using MAGIC VAC® bottle caps and in glass jars with lid and ring.

(2H) "M" (Marinating) button - It starts the "Quick marinating" special function, to be carried out only in the 2.5 liter square MAGIC VAC® *Executive* container code ACO1073

(3) Vacuum gauge - It indicates the vacuum value obtained

(4) Hose air inlet - For connecting the hose to create the vacuum in MAGIC VAC® *Executive* containers, in containers sealed with MAGIC VAC® universal caps, in bottles using MAGIC VAC® bottle caps and in glass jars with lid and ring.

READ THESE IMPORTANT WARNINGS BEFORE USING THE APPLIANCE!!

The manufacturer takes every step necessary to ensure utmost product quality and safety. However, as for all electrical appliances, you should follow some basic safety rules to avoid creating a hazard for people, animals and/or property.

- Before using the appliance for the first time, and periodically throughout its life, check the power supply cord for any damage; if you detect any damage, do not plug it in. Take the appliance immediately to an authorised service centre or your dealer.

- Carefully read the directions before using your MAGIC VAC® *Jumbo* and keep them handy for future reference.

- This appliance is not intended for use by persons (including children) with reduced physical, sensory or mental capabilities, or lack of experience and knowledge, unless they have been given supervision or instruction concerning use of the appliance by a person responsible for their safety.

- Children should be supervised to ensure that they do not play with the appliance.

- Do not use the appliance on or in proximity to hot surfaces.

- The casing of this appliance is not protected again the penetration of liquids.

- Do not use the appliance when barefoot.

- Do not immerse the appliance in water and do not use it if the cord or plug are wet; should they get wet during use, immediately pull out the plug wearing dry rubber gloves. Do not remove or touch the appliance under water until you have pulled out the plug. Do not use the appliance after its removal from water (take it immediately to an authorised service centre or your dealer).

- To avoid burns, do not touch the sealing bar while using the appliance or at the end of the cycle.

- Do not use knives or other sharp tools to remove any residues from the sealing bar; always wait until it cools down before cleaning it with a sponge moistened with a mild washing up liquid.

- Never use adapters for power supplies different from the one indicated on the appliance(see plate details).

- Always unplug the appliance after use.

- Do not open or tamper with the appliance. Servicing may be performed by authorised personnel only. Any unauthorised repairs will invalidate the warranty.

- The Manufacturer, the Retailer and the Importer are responsible for safety, reliability and performance only if: a) the appliance is used in accordance with the operating instructions; b) the electrical system of the premises where the appliance is used is in conformity with current laws.

Use only original MAGIC VAC® bags and accessories

OPERATING INSTRUCTIONS

⚠ **Warning:** when the appliance is not in use keep the lid raised to prevent deformation of the vacuum airtight gasket.

Before use, always thoroughly clean your appliance and any accessories coming in contact with food (containers, caps, jars etc.) as directed in the "CLEANING INSTRUCTIONS" section.

1 - Positioning the appliance

Position the appliance in a dry place on a level surface, making sure that the work area in front of the appliance itself is clear of obstacles and there is enough room to accommodate the bags with the food to be packed. Plug the power cord into the socket on the side of the appliance and plug the power cord into a power socket corresponding to the voltage of the appliance (see plate details).

2 - Turning on the appliance

Press the switch (1) located on the side of the appliance; on the display both the green ON light (2A) and the red light (2F) indicating sealing time (MED) will turn on.

3 - Settings

3.1 - Setting sealing time

For setting sealing time press the "T" button (2F) before starting the packing cycle. The factory set sealing time remains in memory until:

- a different sealing time is selected;
- the STOP button is pressed;
- the appliance is switched off by putting the switch in the "0" position or disconnecting the power supply cord from the power socket.

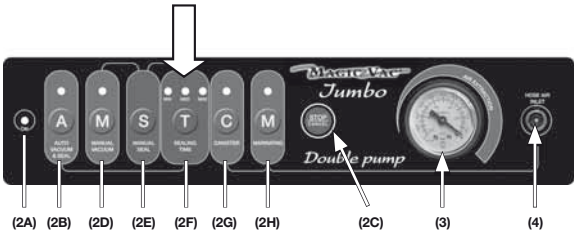

The position of the red indicator light above the button indicates the selected sealing time:

- MIN (left red light on) - minimum sealing time, recommended for sealing several bags;
- MED (central red light on) - medium sealing time, suitable for most applications; every time it is turned on, the appliance automatically reverts to the factory set sealing time, i.e. medium time.
- MAX (right red light on) - maximum sealing time, recommended for the preservation of wet foodstuffs.

3.2 - STOP/CANCEL button - 2C

- To stop the appliance at any time press the STOP/CANCEL button **(2C)** as shown in figure A; then release the lid by rotating one of the 2 handles **(7)** of the "Lock & Unlock System".

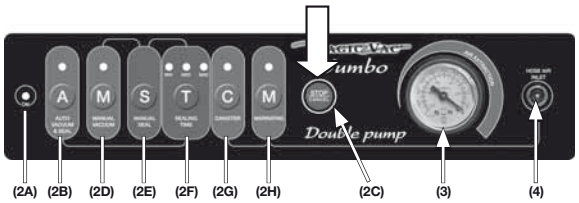

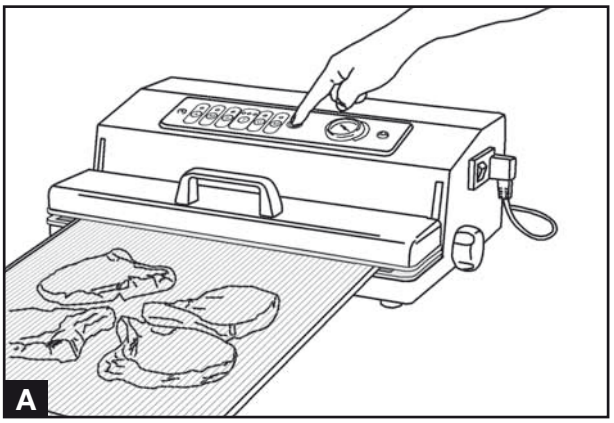

4 - Tips on using bags

MAGIC VAC® bags are available in several lengths: 20, 30 and 40 cm. Choose the bag size suited for the food you intend to preserve. Check that the bag you are going to use is at least 8 cm longer than the food to be packaged, taking into account an additional 2 cm for each time the bag will be subsequently reused.

5 - Making bags from MAGIC VAC rolls®

a) Unroll a bag of suitable length and cut it using the MAGIC *Cutter* **(15)** as shown in fig. B, moving it from rim to rim. Now you can seal an open side of the cut bag as follows:

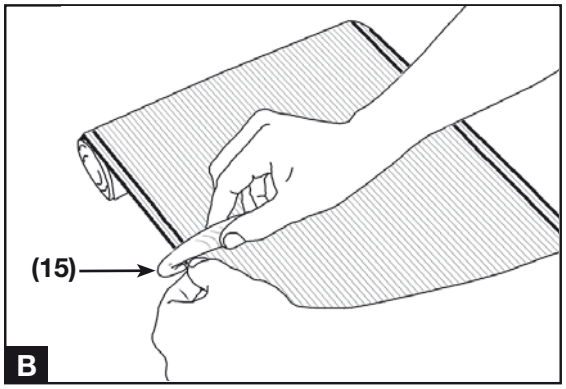

b) Seal either of the two open ends of the bag by positioning it on the sealing bar **(11)** with the smooth side facing up (fig. C).

Warning: be careful not to let the bag hang over into the vacuum chamber (10) or on the sealing gasket (9); place the end flush with the external part of the gasket, as shown in the figure.

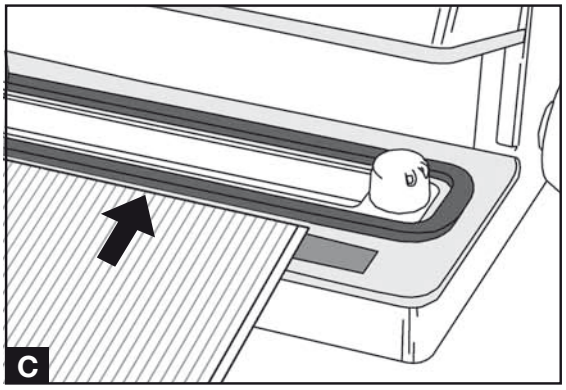

c) Lower the lid **(5)** pressing the handle **(6)** until it locks or pressing down on the round removable stickers located at the end of the lid (N.B: the appliance lid must remain completely lowered) (fig. D).

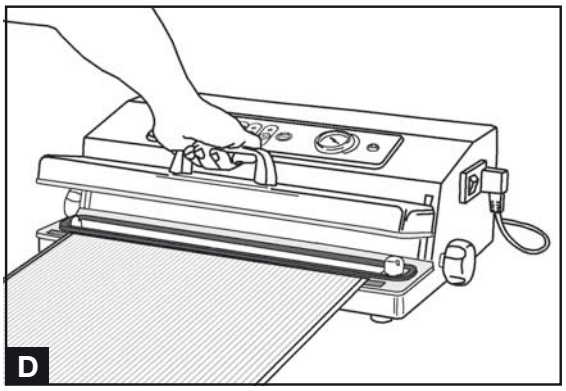

d) Press the “S” button **(2E)** and the appliance will automatically seal bag and then stop (fig. E)

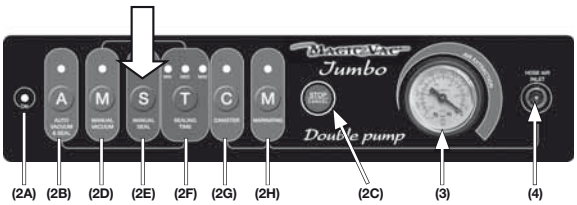

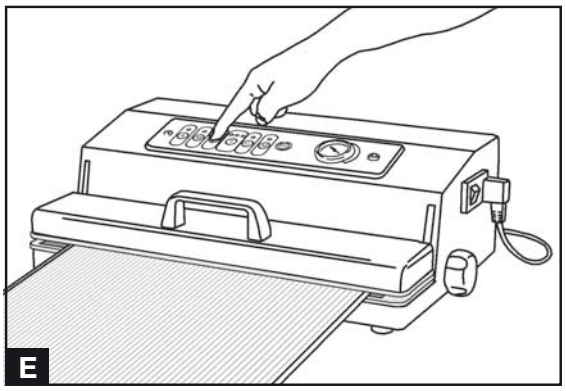

e) Release the lid by rotating one of the 2 handles **(7)** of the “Lock & Unlock System” (fig. F) and remove the bag.

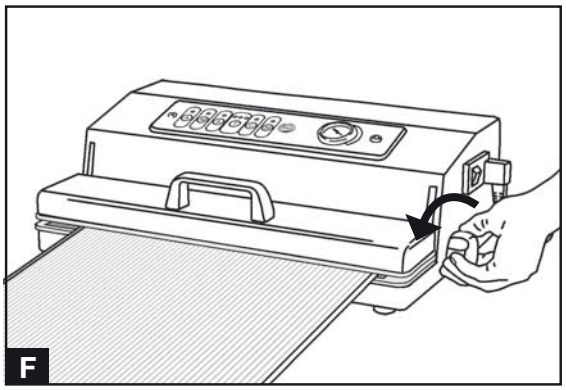

f) Check the quality of the seal obtained, which should appear as a regular, wrinkle-free crosswise strip with no internal ridges in the bag. (fig. G)

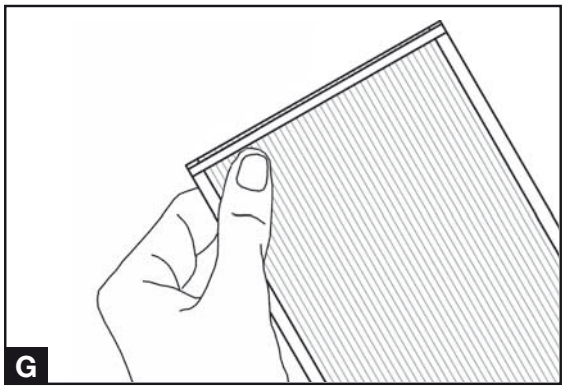

6 - Automatic cycle using bags (pre-cut bags; see also section 5.)

It carries the vacuum packing automatic cycle with final sealing of the bags.

a) Place food in the bag without creasing it excessively or stretching surfaces. Eliminate any liquids or food residues from the area inside the bag that will be sealed.

b) Place the bag and its contents in front of the appliance and place the open end inside the vacuum chamber **(10)** with the smooth side facing up (fig. H).

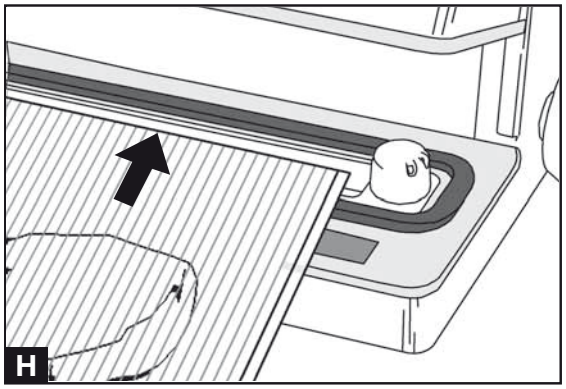

c) Lower the lid **(5)** pressing the handle **(6)** until it locks or pressing down on the round removable stickers located at the end of the lid (N.B: the appliance lid must remain completely lowered). (fig. I).

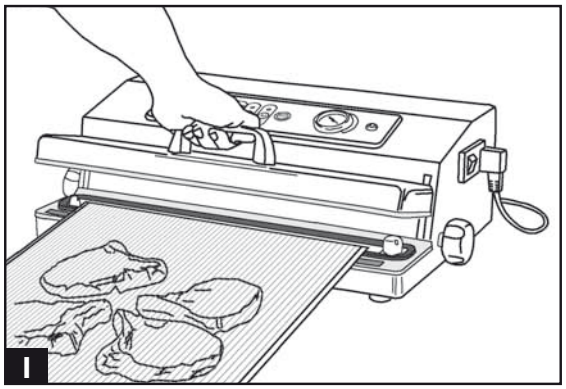

d) Set sealing time if required (see section 3.1 - ***Setting sealing time*** on page) (fig. L)

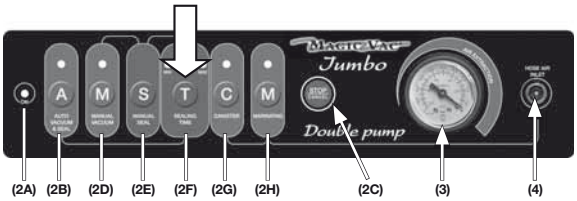

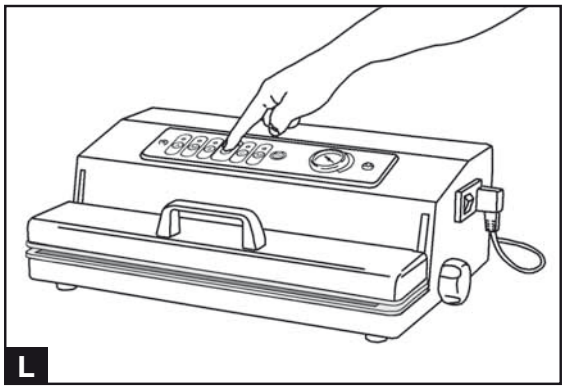

e) Press the “A” button **(2B)** to start the automatic cycle. The appliance will automatically carry out a vacuum packing cycle. Wait until the red indicator light of the T button stops blinking (fig. M).

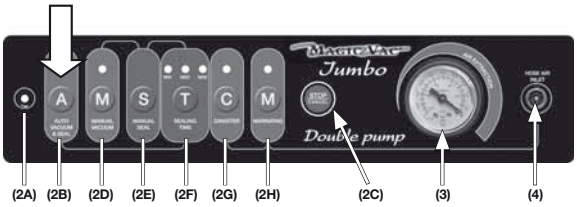

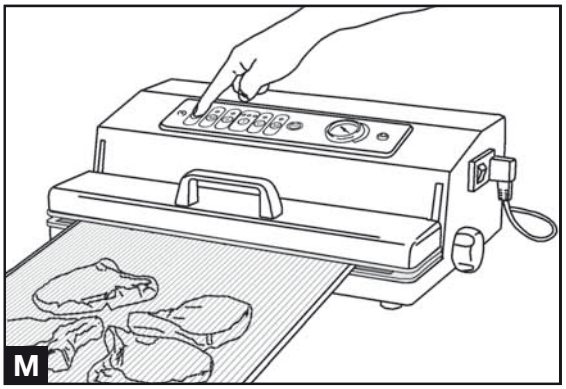

f) Release the lid by rotating one of the 2 handles **(7)** of the “Lock & Unlock System” (fig. N) and remove the bag.

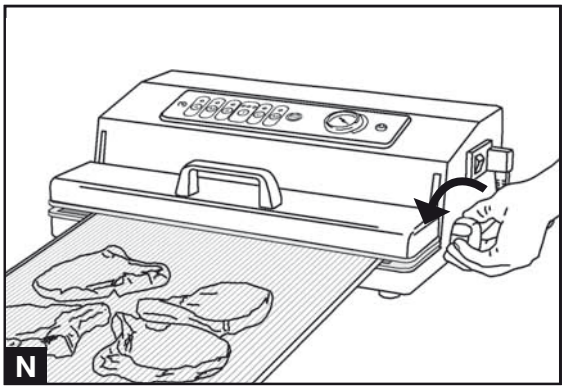

g) Check the quality of the seal obtained, which should appear as a regular, wrinkle-free crosswise strip with no internal ridges in the bag. (fig. O)

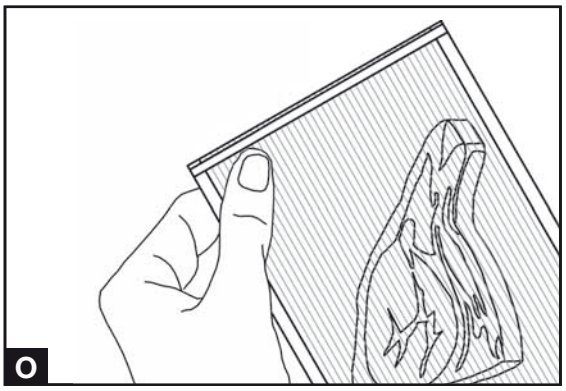

7 - Manual vacuum packing cycle in bags

A) For controlling air extraction to prevent crushing of delicate and brittle foods

- Repeat steps from **a)** to **d)** of section 6 – see page XX
- Press the “M” button **(2D)** to start the manual vacuum cycle. Thereafter, by pressing the “S” **(2E)** button the operator can start manual sealing before the fragile and delicate contents of the bag are crushed.
  Wait until one of the 3 red indicator lights MIN / MED / MAX above the T button stops blinking and release the lid by means of one of the 2 handles **(7)** to remove the bag; at this stage, if the pump has not reached a certain vacuum value, the appliance may carry out a second sealing (by starting the pump again for a few seconds).
  (The use of rigid containers for delicate and brittle foods is always recommended)

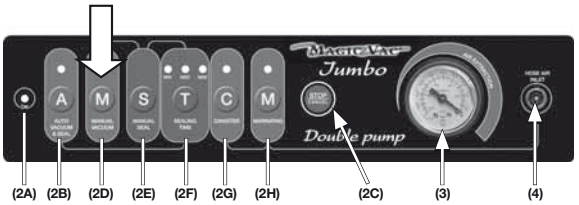

B) For complete air extraction even in foodstuffs having a complex shape

- Repeat steps from **a)** to **d)** of section 6 - see page XX
- Press the “M” button **(2D)** to start the manual cycle; wait until the vacuum gauge pointer reaches the highest level (approx. – 0.85 bar) and let the pump work approx. 1 minute longer. Then start manual sealing by pressing the “S” **(2E)** button.
  This method is recommended for vacuum-packing foods containing air bubbles (e.g. Emmenthal cheese, whole chickens, fish, etc.).

8 - Automatic cycle in containers

For creating a vacuum in MAGIC VAC® *Executive* containers, in containers sealed with MAGIC VAC® universal caps, in bottles using MAGIC VAC® bottle caps and in glass jars with lid and ring.

8.1 - Vacuum packing in MAGIC VAC® *Executive* containers or in containers sealed with MAGIC VAC Universal Caps®

WARNING:
Use only and exclusively MAGIC VAC® Executive containers since they resist the vacuum value created by Jumbo, whereas other types of containers could implode under the vacuum pressure of the appliance and cause injury.

The MAGIC VAC® *Executive* containers and the MAGIC VAC® Universal Caps with star-shaped knob (fig. P) make vacuum packing easier, because the connection hose can be introduced directly into the knob central hole (fig. Q).

MAGIC VAC® Universal Caps, available in two diameters (100 mm and 125 mm), are to be used on jars for preserving food and bowls and receptacles made of tempered glass. The Universal Caps work just like the Caps for MAGIC VAC® *Executive* containers.

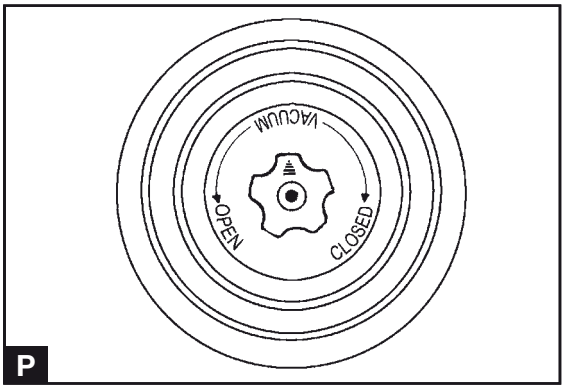

WARNING: With MAGIC VAC® Universal Lids do not use plastic or glass containers that are not suitable for vacuum since they could implode under the vacuum pressure of the appliance and cause injury.

a) Fill the container, leaving at least 3 cm of room from the upper rim of the container and position the cap on the container. Turn the knob to the "VACUUM" position. (fig. P)

b) Connect the container cap knob to the appliance air inlet **(4)** by means of the connection hose **(16)** (fig. Q)

N.B.: at the beginning of the vacuum phase it may be necessary to press down the container cap with your hand to seal the container

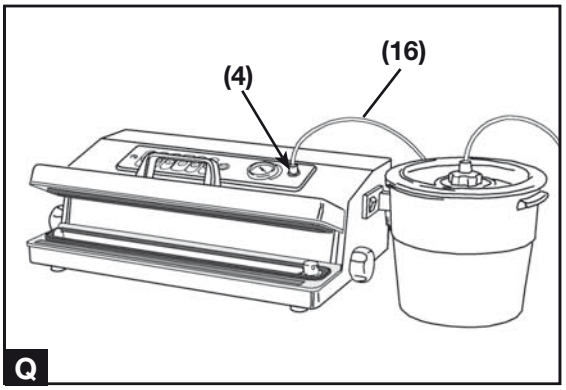

c) Press the "C" button **(2G)**; the appliance will automatically carry out a vacuum packing cycle and turn off on its completion.
In any case the pump switches off automatically after about 5 minutes.

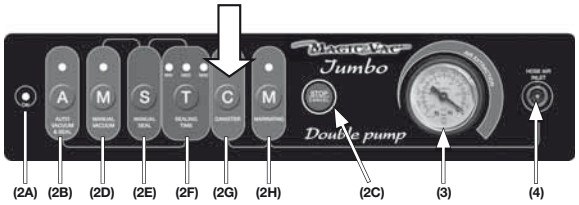

d) Disconnect the tube from both the container lid knob and the appliance air inlet.

e) Turn the knob to the "CLOSED" position.

To open the containers turn the knob to the "OPEN" position, you should hear a hissing of air as it enters the container. This sound guarantees that the contents have been packed in a vacuum.

8.2 - Vacuum packing in glass jars sealed with metal caps (e.g. Leifheit)

Use the large-sized cap attachment to pack foods in large-mouthed glass jars with a metal cap. A small-sized cap attachment is also available for narrow-mouthed jars sealed with metal caps.

a) Fill in the jar by leaving at least 3 cm space from the jar upper rim.

b) Connect the Cap Attachment **(17)** to the air inlet **(4)** of the appliance by means of the connection hose **(16)**. Place the cap attachment directly on the jar with the metal cap only **(18)** and press it down, making sure that it is properly connected (fig. R).

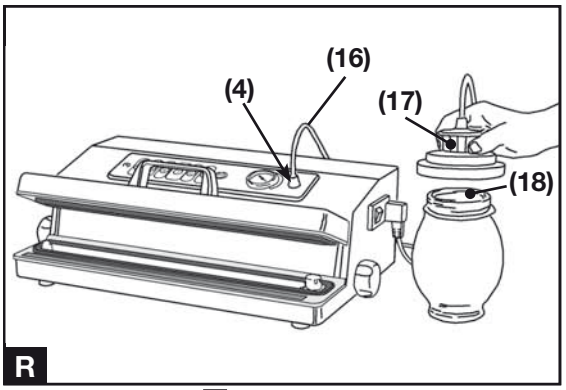

c) Press the "C" button **(2G)**; the appliance will automatically carry out a vacuum packing cycle and turn off on its completion.

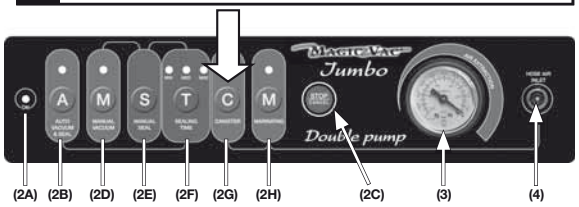

N.B.: at the beginning of the vacuum phase it may be necessary to press down the cap attachment with your hand to seal the container.

d) Disconnect the tube from both the cap attachment and the appliance air inlet. Remove the cap attachment from the jar.

e) Mount and screw down the ring **(19)** supplied with the jar (fig. S).

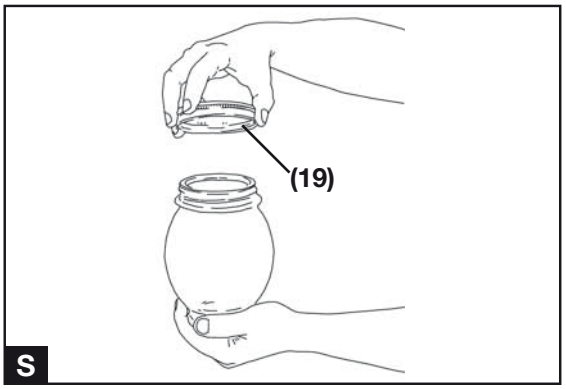

To open a glass jar vacuum-sealed with a metal cap, use the cap opener provided (the side with writing should be turned up). Position the cap opener as shown in figure T and gently pry open the cap until the vacuum is released. Remove the metal cap. This accessory allows you to reuse the cap.

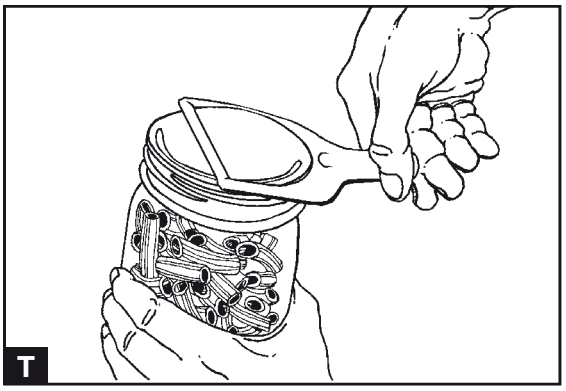

8.3 - Vacuum packing with MAGIC VAC® bottle caps

The MAGIC VAC® Bottle Cap may be used to seal partly filled bottles of wine or non-fizzy beverages. Using the Bottle Cap will allow you to create a vacuum in the bottle to retard oxidization and preserve the freshness and flavour of its contents for a longer time.

a) Press the Cap firmly into the bottle. By means of the connection hose **(16)** connect the air inlet **(4)** of the appliance to the MAGIC VAC® Bottle Cap **(20)** (fig. U).

b) Press the "C" button **(2G)** (blue indicator light on); the appliance will automatically carry out a vacuum packing cycle and turn off on its completion.

c) Disconnect the hose from both the Bottle Cap and the appliance immediately.

To open a bottle sealed with the MAGIC VAC® Bottle Cap, simply pull the cap out of the bottle. You will hear the air rushing into the bottle.

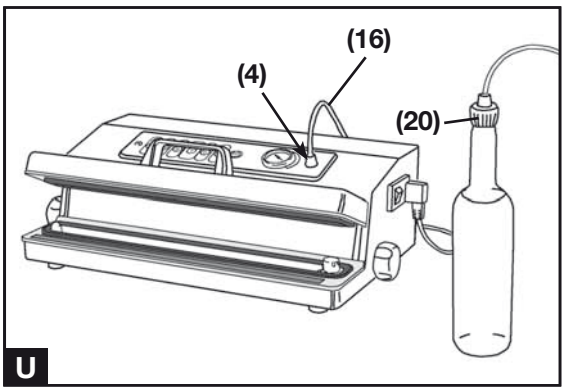

9 - Quick marinating

Marinating is the best system to flavour meat or game and make it more tender. Marinating vacuum packed food takes only few minutes because the vacuum process opens the food pores thus allowing a better and quicker marinade absorption.

Thanks to the exclusive “quick marinating” function, the appliance keeps the vacuum for a few minutes then releases it allowing the food to “rest” for 30 seconds. This process is repeated several times. The alternation of vacuum and rest makes marinating faster. Once the quick marinating cycle is completed, an acoustic signal (beep) will be heard to indicate that marinating is over. The whole cycle lasts approx. 12 minutes.

N.B.: During the marinating cycle, the container knob must be in the “OPEN - (M)” position.”.

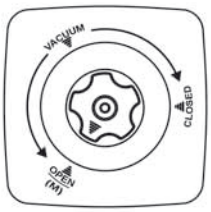

a) To marinate meat, poultry or fish, pierce the surface of the food and place it in the specific *MAGIC VAC® Executive 2.5 l square container (code ACO1073),* cover it with the marinade of your choice leaving at least 3 cm from the container upper rim and place the cap on the container. Engage the lid safety catches **(21)** and turn the knob to the “OPEN - (M)” position.

b) Connect the container cap knob to the appliance air inlet (4) by means of the connection hose **(16)** (fig. V)

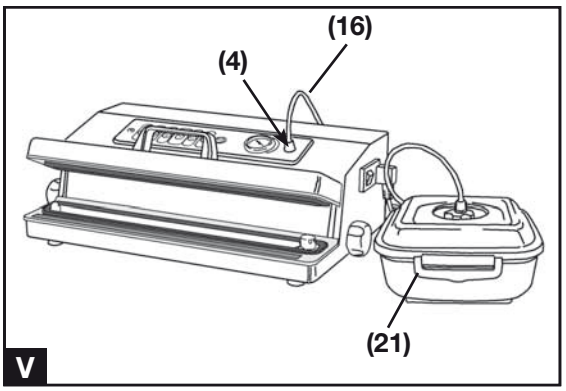

N.B.: make sure that the cap gasket and the container rim are dry and clean.

c) Press the “M” button **(2H)** (blue indicator light on); the light will stay on during the vacuum phase and blink during the rest phase. The appliance switches off automatically after the third vacuum phase. The whole cycle lasts approx. 12 minutes.

d) An acoustic signal (beep) indicates that the cycle is over.

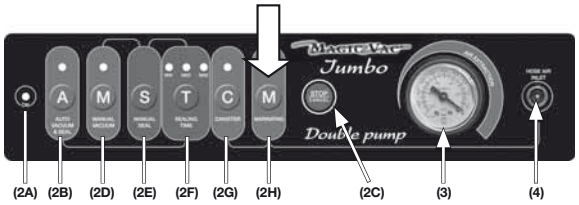

N.B.: at the end of the cycle, if you want to keep your marinade under vacuum, turn the container knob to the “CLOSED” position .

e) Disconnect the tube first from the container and then from the appliance air inlet. Finally press the STOP button to end the cycle.

You can turn the appliance off at any time by pressing the “STOP/ CANCEL” button **(2C)**; if you wish to repeat the marinating cycle, disconnect the hose from the container and wait until the latter is completely filled with air. Connect again the hose to the container knob (in the OPEN - M position), then start again the quick marinating cycle by pressing “M” button.

CLEANING INSTRUCTIONS

WARNING: always unplug the appliance before cleaning the MAGIC VAC®.

- Carefully wash your hands before cleaning the appliance and its accessories.
- Both before and after use, clean the exposed surfaces of the machine using a sponge moistened with a neutral detergent, denaturated alcohol or a water and white vinegar solution

  Do not use aggressive detergents, solvents or products containing aromatic essences!!!!

  If any liquids accidentally get inside the appliance, do not connect it to the mains electricity supply and do not use it; contact your nearest dealer or authorised service centre.

Important: avoid using sharp metal tools (such as scissors, knives, punches or scrapers) to remove dirt residues, as they can damage the steel surface, thus causing corrosion. Furthermore, a wrong use of chlorine or detergents based on hydrochloric, muriatic, hydrofluoric or sulphuric acid (such as many descaling fluids), may cause irreparable damage to stainless steel reducing its shine and even its resistance.

- Thoroughly wash the MAGIC VAC® accessories (containers, caps, jars, etc.) like you would wash any kitchen utensils, allowing them to dry completely. If you wash the accessories in a dishwasher, be sure to place them on the top rack.

- The appliance is provided with a liquid collecting tray **(10A)** which is entirely removable and washable also on the dishwasher top rack (fig. Z). Wash it like you would wash any kitchen utensils, allowing it to dry completely; then reinsert the tray into the vacuum chamber.

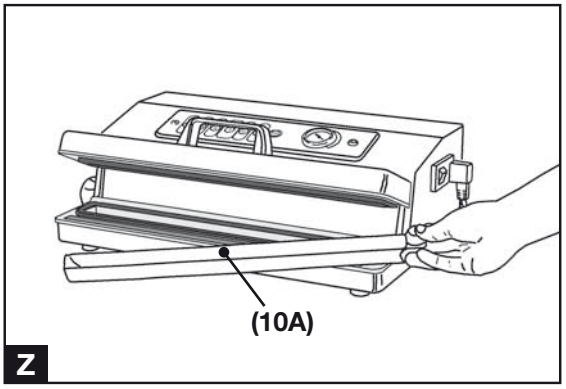

TECHNICAL SPECIFICATIONS

Structure:	STAINLESS steel (AISI 304)
Dimensions of the appliance:	54(length) x 31.5(depth) x 17(height) cm
Voltage/Output:	230V~ 50Hz 380 W
Length of sealing bar:	435 mm (with forced-air cooling system)
Pump type:	Double pump with self-lubricating pistons
Nominal pump flow rate:	31.5 l/min
Max. vacuum:	-0.85 bar
Appliance weight:	approx. 12 kg
Marking	CE

Product approved by the F.I.C (Italian Federation of Chefs)

The performance of MAGIC VAC® systems has been tested by AITA (Italian Association of Food Technology) - see page 15.

Electromagnetic compatibility

The MAGIC VAC® *Jumbo* has been engineered to meet current electromagnetic compatibility requirements. However if you suspect that the appliance is interfering with the operation of your TV, radio or other electrical unit, try relocating the appliance until the interference ceases. Alternatively try plugging the appliance into a different power socket.

Disposal: In conformity with Directive 2002/96/EC, the symbol shown on the appliance to be disposed of indicates that this is considered as waste and must therefore undergo "sorted waste collection". The user must therefore take (or have taken) the above waste to a pre-sorted waste collection centre set up by the local authorities, or else give it back to the dealer when purchasing a new appliance of the same type. Pre-sorted waste collection and the subsequent treatment, recovery and disposal operations favour the production of appliances made of recycled materials and limit the negative effects of any incorrect waste management on the environment and public health. The unlawful disposal of the product by the user could result in administrative fines as provided by the laws transposing Directive 2002/96/EC of the European member state in which the product is disposed of.

DECLARATION OF CONFORMITY

Address:	Via Colli Storici, 221, 223, 225 25010 S.Martino della Battaglia (BS) Italia
Product type:	Vacuum packaging machine, Magic Vac Jumbo **230V ~ 50Hz 380W**
Code:	V702PK1

We hereby declare that the above mentioned product is manufactured in conformity with the essential requirements of the European

2006/95/EC – 2004/108/EC Directive

Safety Standards:	EN 60 335-2-45:2003 EN 60 335-1:2002+A11:2004+A1:2004 +A2:2006+A12:2006 EN 62 233:2008 EN 61 000-3-2:2006 EN 61 000-3-3:1995+A1:2001+A2:2005 EN 55 014-1:2006 EN 55 014-2:1997+A1:2001
Quality System Standards:	UNI EN ISO 9001 : 2000, ISO 13485 : 2003 + CMDR (CMDCAS)

Title:	General Manager	Quality Assurance
Name:	Abate Riccardo	Mostarda Raffaello
Signature:	_____	_____
Date:	22/04/2009	22/04/2009

CE

®Registered Italy Patent and Trademark Office and other countries.

TROUBLESHOOTING

The MAGIC VAC® does not work	• Check the switch **(1)** position. • Check that the MAGIC VAC® power supply cord is plugged into the appliance and into the electrical outlet. Check the electric outlet by plugging another unit into it. • Check for faults in the power cord or the plug. Should you detect a fault, do not use the appliance.
The MAGIC VAC® fails to apply the first seal on the bag cut from the roll	• Make sure the bag cut from the roll is properly positioned as described in the paragraph: **"5 - Making bags from MAGIC VAC rolls®"** see page XX • Make sure that the sealing gasket is intact and in the correct position
The MAGIC VAC® does not create a complete vacuum in the bags	• To seal the bag properly, you must make sure that the open end remains completely inside the Vacuum Chamber. • Make sure that the Sealing Bar and the Airtight and Sealing Gaskets are free of impurities. After cleaning them, put them properly back in place. • The MAGIC VAC® bag might have a hole in it. To check the bag, seal it with air inside, place it underwater and apply pressure on it. The appearance of bubbles means that there is a leak. Reseal or use another bag.
The MAGIC VAC® does not seal the bag properly	• Whenever the appliance does not seal the bag completely, press the "T" button (2F) and increase the sealing time. • If the Sealing Bar overheats and melts the bag, you may have to raise the Lid and allow the Sealing Bar to cool down for a few minutes. • Make sure that the sealing gasket is intact and in the correct position
The MAGIC VAC® bag does not maintain a vacuum after being sealed	• Leaks along the seam may be caused by creases, crumbs, grease or liquids. Reopen the bag, clean the upper inside part of the bag and remove any foreign material from the Sealing Bar before resealing it. • Check that the bag has no holes in it which have caused air to leak in. Use paper napkins to protect any sharp edges on the contents of the bag.
The MAGIC VAC® does not create a vacuum in the containers	• By means of the Connection Hose, connect the container cap (or the Cap Attachment if necessary) to the Air Inlet of the appliance. • Leave enough room (at least 3 cm) between the contents and the top of the jar or container. • If liquids come out during the vacuum-packing process, remember that they must first be chilled in a refrigerator. • Check that the rim of the jar or container and the universal cap are not damaged in the sealing area. Wipe the rim and cap clean with a cloth moistened with lukewarm water and repeat the vacuum-packing process. • Make sure that the gasket of the container cap or the universal cap is set properly in place and is not damaged.
MAGIC VAC® *Executive* containers or MAGIC VAC® Universal Caps do not maintain a vacuum	• Make sure that the arrow on the knob of the container cap is positioned on "VACUUM" before creating a vacuum in the container and it is positioned on "CLOSED" after a vacuum is formed. • Make sure that the O-ring beneath the knob of the container cap or the universal cap is set properly in place. • Check that the rim of the jar or container and the universal cap are not damaged in the sealing area. Wipe the rim and cap clean with a cloth moistened with lukewarm water and repeat the vacuum-forming process. • Make sure that the gasket of the container cap or the universal cap is set properly in place and is not damaged. • Make sure that the connection tube is properly connected to both the container knob and the air inlet **(4)** of the appliance.
The marinating cycle does not start properly	• Make sure that the arrow on the knob of the square container cap is positioned on "OPEN - (M)" and safety catches **(21)** are engaged. • Make sure that the O-ring beneath the knob of the container cap or the universal cap is set properly in place. • Check that the rim of the jar or container and the universal cap are not damaged in the sealing area. Wipe the rim and cap clean with a cloth moistened with lukewarm water and repeat the vacuum-forming process. • Make sure that the connection tube is properly connected to both the container knob and the air inlet **(4)** of the appliance. • Make sure that the gasket of the container cap or the universal cap is set properly in place and is not damaged. • When the first vacuum phase starts gently press down the cap onto the container until the vacuum gauge pointer begins to turn.

THE ADVANTAGES OF MAGIC VAC® VACUUM PACKING

This manual is the result of an objective verification report compiled, on behalf of AITA (Food Technology Association) by Prof. Luciano Piergiovanni, Chair of "Agri-food product conditioning and distribution technologies" at Milan University.

Vacuum packing will revolutionise the way in which you buy and keep food. By keeping food under vacuum (i.e. without air), **the shelf-life of foods is greatly extended,** whether it is kept in the larder, fridge or freezer. Air can make food rancid and stale, it can cause it to ferment, dry out, and it may even cause freezer burns. Vacuum packing **keeps your food fresher and more flavourful for longer.**

Now you can pack fresh food bought from the market, or food picked from your vegetable garden, in handy portions for future use, **even in large quantities.** Food bought already vacuum-packed, like cheese and meat, will retain its flavour and freshness once opened, **without problems of moisture and mould,** if it is vacuum-packed after use in MAGIC VAC® bags and containers. Meat, fish and vegetables can be frozen **without the risk of frost burns** and will keep their freshness and quality. Foodstuffs like coffee, rice, flour and nuts will last much longer if they are vacuum packed. Fresh or perishable foods must in any case be frozen or kept in the fridge.

The original quality of the food must be of the very highest order, in terms of freshness and environmental hygiene, when you decide to vacuum pack it. There are in fact no preservation methods which will transform a poor product into a good one.

Always keep your MAGIC VAC® bags and containers handy and you will quickly appreciate the many advantages and ease of use that MAGIC VAC® offers when it comes to preserving the quality of food.

Consult the **"Food preservation times with MAGIC VAC®"** chart to see how vacuum packing can extend the life of any food without in any way altering or impairing its taste, smell, appearance, hygiene and nutritional value.

STORAGE LIFE WITH MAGIC VAC®

	Preservation times at atmospheric pressure	Preservation times with MAGIC VAC®
Refrigerated foods (5 ± 2 °C)		
Red meat	3-4 days	**8-9 days**
White meat	2-3 days	**6-9 days**
Whole fish	1-3 days	**4-5 days**
Game	2-3 days	**5-7 days**
Cooked pork products	7-15 days	**25-40 days**
Sliced pork meats	4-6 days	**20-25 days**
Soft cheese	5-7 days	**14-20 days**
Hard and semi-hard cheese	15-20 days	**25-60 days**
Vegetables	1-3 days	**7-10 days**
Fruit	5-7 days	**14-20 days**
Cooked and refrigerated foods (5 ± 2 °C)		
Purees and vegetable soups	2-3 days	**8-10 days**
Pasta and risotto	2-3 days	**6-8 days**
Boiled and roast meats	3-5 days	**10-15 days**
Desserts with fillings (cream and fruit)	2-3 days	**6-8 days**
Frying oil	10-15 days	**25-40 days**
Frozen foods (-18 ± 2 °C)		
Meat	4-6 months	**15-20 months**
Fish	3-4 months	**10-12 months**
Vegetables	8-10 months	**18-24 months**
Food at ambient temperature (25 ± 2 °C)		
Bread	1-2 days	**6-8 days**
Packed biscuits	4-6 months	**12 months**
Pasta	5-6 months	**12 months**
Rice	5-6 months	**12 months**
Flour	4-5 months	**12 months**
Dry fruit	3-4 months	**12 months**
Ground coffee	2-3 months	**12 months**
Powder tea	5-6 months	**12 months**
Freeze-dried products	1-2 months	**12 months**
Powdered milk	1-2 months	**12 months**

These are indicative values that in any case depend on the integrity of the package and the original quality of the food.
IMPORTANT: Keep perishable foods in the freezer or fridge. Vacuum packing extends the life of food, but does not turn it into a "preserve", i.e. a stable product at ambient temperature.

ABOUT VACUUM PACKING

The deterioration of food is caused by chemical reactions that occur in food which is exposed to the air, temperature, moisture, the action of enzymes, the growth of micro-organisms or contamination by insects.
Vacuum packing reduces the absolute pressure of the air inside the package or container, by removing the oxygen and eliminating volatile compounds. The oxygen in the air causes food to deteriorate, firstly through a process of oxidation, causing the loss of nutritional values, flavour and all the food's qualities. Air also promotes the growth of most micro-organisms and causes the frost burns which occur on frozen food.
Vacuum packing extends the shelf life of many fresh foods, by reducing oxidation and preventing the proliferation of microbes (bacteria and mould). However, many fresh foods contain sufficient moisture to encourage the growth of micro-organisms that can grow with or without air. To prevent the deterioration of such foods, they must be preserved at low temperatures.
Micro-organisms like mould, yeast and bacteria are present everywhere, but they can cause problems only in certain conditions.
For example, mould will not grow in environments with a low oxygen content, or in the absence of moisture or humidity. To grow, yeast requires moisture, sugar and a moderate temperature, but it can grow in the presence or absence of air. Refrigeration slows the growth of yeast and freezing blocks it completely. Bacteria can multiply with or without air, depending on their type.
Clostridium Botulinum is a very dangerous type of bacteria which can develop in environments which do not contain acids, are without oxygen and are exposed to temperatures in excess of 4°C for long periods of time.
Foodstuffs vulnerable to attack by Clostridium Botulinum are those with low acidity (like red meat, poultry, fish, seafood, olives in brine, eggs, mushrooms and vegetables) and medium acidity foods like virtually all vegetables and many fruits (ripe tomatoes, onions, red pepper, figs and cucumbers). To prevent contamination by this bacterium, it is essential to observe the basic rules of hygiene and, to prevent its harmful proliferation in preserved foods, they must be refrigerated for short periods and/or frozen for long-life preservation. However, such foods must be eaten immediately after heating.

Important: you must consume immediately any food which has been heated while still sealed in MAGIC VAC® bags. Leaving the food to cool slowly at room temperature in the sealed vacuum bag may cause several harmful micro-organisms to multiply, in just a few hours, to values that are health-threatening.

Several enzymes found in foods cause increasingly noticeable changes in colour, structure and flavour; such changes depend on the preservation time, temperature and, above all, the presence of air. To halt the action of enzymes, vegetables must be blanched briefly using steam or a microwave oven. Food which contains a high percentage of acidity, like most fruits, do not require blanching. The absence of air created by the vacuum will in any case slow down or prevent the action of these enzymes.
Insect larvae are frequently found in many low water content or dried foods which have not been vacuum packed or frozen, and they can develop during preservation and thus contaminate the food. Some products like flour and grain might contain larvae, but using MAGIC VAC® vacuum packing will stop them developing into insects.

HOW TO PRESERVE FOOD IN MAGIC VAC® BAGS

Vacuum packing for the freezer

First of all, use the freshest possible food. The MAGIC VAC® system will allow you to retain all the freshness of the food only if it is properly preserved. Some foods have a soft consistency which could be damaged by vacuum packing the product when fresh. To prepare delicate foods like meat, fish, berries, bread, etc., it is advisable to pre-freeze them first. In the first twenty-four hours there is no risk of freezer burns, so you can vacuum pack the products frozen the previous day in MAGIC VAC® bags, and then keep them in the freezer for long periods so as to preserve all the nutritional values and flavour of the product you have packed.
When vacuum packing soups, stews or other liquid food, pre-freeze it in a pan or high-strength dish. When the food becomes solid, vacuum pack it, add a label and replace in your freezer.
To vacuum pack vegetables, peel them and then blanche them briefly in boiling water or a microwave oven until they are warm but still firm. Then vacuum pack them in convenient portions.
If the food is not pre-frozen, leave an extra 5 cm in the length of the bag to allow for expansion due to freezing. With regard to meat and fish, it is advisable to place the food on a paper towel and vacuum pack it with the towel in the bag. This will absorb any moisture in the food.
To preserve food like focaccia, crêpes and small hamburgers, stack them on top of each other, placing greaseproof paper or film between each piece. This will make it easier to remove some of the food, repackage the rest and replace it immediately in the freezer.

Vacuum packing for the fridge

For busy households, food can be prepared in advance, then vacuum packed and kept in the fridge for use at different times, ready to be heated as and when necessary.

Vacuum packing for the larder

Even foods that can keep at room temperature (like, for example, coffee, flour, pasta, sugar, etc.) can benefit from vacuum packing. If these products are to remain unused for several days, such as when you go away on holiday, it is advisable to protect all foods by vacuum packing. They will keep better and moisture, mould and insects will not attack and ruin them.

Defrosting MAGIC VAC® bags

To defrost vacuum packed food such as meat, fish, fruit, vegetables or other delicate foodstuffs, place it on the lowest shelf in the fridge to defrost slowly; bread and focaccia should be left at room temperature, while soups or other liquid foods should be immersed in hot water still in the vacuum bags until they reach the right temperature. When you leave food at room temperature or heat it in a bain-marie, make sure you cut one corner of the bag to let the steam escape. When the food has been defrosted, it must be consumed immediately. Do not re-freeze it

Repackaging pre-packed food

Many foodstuffs, like cheese and meat, are sold pre-packed in factory-prepared vacuum bags. To retain the flavour and freshness of these foods, repackage them in MAGIC VAC® bags after the factory package has been opened.

Pre-packed foods must always be consumed by the use-by date shown on the original package. They must also be handled with the greatest care and hygiene when repackaging.

Useful tips…

- For food with tapered ends or sharp edges, like bones and spaghetti, pad the edges with paper towels to prevent perforating the bag.
- Fragile and delicate foodstuffs like strawberries, crackers or biscuits should be preserved in MAGIC VAC® containers.
- There are many non-food products which can be vacuum packed, such as camping equipment including matches, first aid kits and clean, dry clothes. You can even preserve the emergency triangle in the car. Silverware and collections can also be vacuum packed to protect the items against oxidation, etc.

HOW TO PRESERVE FOOD IN MAGIC VAC® CONTAINERS

Warning: Do not use plastic or glass containers that are not suitable since they could implode under the vacuum pressure of MAGIC VAC® and cause injury.

Freezing in containers

To freeze food in plastic containers use only MAGIC VAC® containers or, in the case of glass receptacles, used tempered glass suitable for freezer temperatures.

Vacuum packing food in containers

Vacuum packing in containers is ideal for products that you use frequently. Dried foodstuffs like pasta, rice, flour, sugar, crisps, savouries or biscuits, and pet food, will maintain all their shape and freshness.
Salad foods and vegetables can be cleaned for the whole week and kept in a MAGIC VAC® container. They will remain firm and fresh. To absorb excess moisture, fold a paper towel and place it on the bottom of the container.

Warning: Liquids must be cooled before vacuum packing. Hot liquids will expand and leak from the container during depressurising.

Food in powder or granule form can be covered with a paper towel before vacuum packing. This will prevent the powder or granules from getting into the vacuum paths or being deposited in the Vacuum Cap seal.
Oil used once for frying can be filtered, cooled, vacuum sealed in a MAGIC VAC® container and kept in the fridge. This will enable you to use the oil again at least once, since it has been preserved in an airless and cold environment, thereby retaining its characteristics.
Larder items like flour, rice and cake mixes stay fresh for longer if they are vacuum packed. Nuts and condiments retain their flavour and will not become rancid.

Marinating food in MAGIC VAC® containers

To marinade meat, poultry or fish, pierce the surface of the food and place it in a MAGIC VAC® container, covered with the marinade of your choice. Vacuum seal the MAGIC VAC® container and cool in the fridge for at least 20 minutes. The food will be as tasty as if it had been left to marinade overnight!

Tips for preserving food in jars

To preserve food in jars, use lids which have been checked and are free from defects. To create and maintain a good vacuum, the seals of the lids must be in perfect condition. To keep the lids in good condition, immerse them in boiling water for three minutes and then rub the dry seal with a drop of oil. This will restore the necessary elasticity to the seals of the lids.

POINTS TO REMEMBER

In order to optimise the preservation of foods and ensure perfect hygiene, a number of important rules must be followed:

- Make sure you wash your hands thoroughly and clean all the implements and surfaces you will be using to cut and vacuum pack the food.
- If possible, wear gloves when handling the food.
- Once perishable food has been packed, place it in the fridge or freeze it immediately, maintaining a constant fridge or freezer temperature. Do not leave the food for a long time at room temperature.
- Place the containers of vacuum packed food carefully in the fridge or freezer so that the food will cool rapidly to a low temperature.
- After opening tinned food or food that has been factory vacuum packed, it can be vacuum packed again. Follow the instructions to cool the food after opening and put it away as soon as it has been vacuum packed.
- Pre-packed foods must in any case be consumed by the use-by date shown on the original package.
- Once you have warmed up or defrosted perishable food, it must be eaten. Do not eat perishable food if it has been left at room temperature for many hours. This is especially important if the food has been prepared with a dense sauce, in a vacuum pack or in other low-oxygen content environments.
- Do not defrost food in boiling water or using other heat sources, unless the food in question is liquid (soups, juices, etc.).
- Vacuum packing extends the life of dried food. Food which has a high fat content becomes rancid due to oxygen and heat. Vacuum packing extends the life of food like nuts, coconuts, or cereal products. Store in a cool, dark place.
- Vacuum packing will not extend the life of fruit and vegetables such as bananas, apples, potatoes and several vegetables, unless it has been peeled prior to vacuum packing.
- Soft foods and food with a delicate structure (like fish, berries, etc.) must be pre-frozen for one night before they can be vacuum packed and placed in the freezer.
- Vegetables like broccoli, cauliflower and cabbage give off gas when they are vacuum packed fresh for storage in the freezer. To prepare these foods for vacuum packing, heat and freeze them.
- To ensure correct and safe vacuum packing, use only original MAGIC VAC® bags, containers and accessories.

All rights reserved. Partial or total reproduction prohibited.

Given the constant technological progress being made in this sector, FLAEM NUOVA reserves the right to make technical and functional changes to the product without prior notice.