Manufactured By

ROBAND AUSTRALIA PTY LTD

OPERATING INSTRUCTIONS

GRIDDLE / GRIDDLE TOASTER

Models:	**G400 and GT400**	**Version 1**
	G700 and GT700	**Version 1**

Includes

International models: **…-Bxx, …-Fxx, …-Gxx, …-Mxx**

Special Features:

- Single or Dual Thermostat Control
- Stainless Steel Construction
- Integrated grease Box and front drain gutter
- Multiple toasting Rack positions (only on Griddle Toaster version)
- Dedicated Toasting element (only on Griddle Toaster version)

CE

These instructions cover the models of ROBAND® Griddle & Griddle Toasters only. Although there are slight variances between models, the installation, operation, care and maintenance procedure is the same for all.

2/09/2016

Roband® Australia is a wholly Australian owned company and has been manufacturing quality commercial catering equipment for the food service industry for more than 50 years. Roband products are engineered and manufactured to the highest standards to provide functionality, reliability and durability, and our quality products are exported world-wide.

Included in the comprehensive Roband® range are Toasters, Fryers, Milkshake Mixers, Rotisseries, Food Display Cabinets and much more.

Roband® Australia also acts as the Australian agents for Vitamix® Blenders, Noaw® Meat Slicers, Förje® Cookware, Robalec™ Soup/Rice Warmers, Robatherm Urns, Austheat® Fryers, Dipo Induction & Autofry Machines. Roband also has its own line of commercial cookware and cutlery under the Robinox® brand name.

For a complete set of brochures please contact your nearest authorised dealer or contact Roband directly at our head office.

Roband Head Office

Sydney, Australia

Roband Australia Pty Ltd	**Tel:**	+61 2 9971 1788
1 Inman Road	**Fax:**	+61 2 9971 1336
Dee Why NSW 2099	**Email:**	sales@roband.com.au
AUSTRALIA	**Web:**	www.roband.com.au

International Agents

For additional agents please email Head Office

Belgium	Linum Europe Ph: +32 (0)56 35 92 96	**Noumea:**	Comptoir Materiel Professionnel Ph: +687 28 50 43
Fiji:	Hotel Equipment Ltd Ph: +679 672 0666	**Papua New Guinea:**	Brian Bell & Company Pty Ltd Ph: +675 325 5411
Germany	Lolsburg Ph: +49 93059878-0	**Singapore:**	Allied Foodservice Equipment Ph: +65 62525880
GREECE	K&N Engineers Ltd Ph: +30 210 520 0440	**South Africa**	Foodservice Solutions (Pty) Ltd Ph: +31 306 017 442
Hong Kong:	Chung Wah Kitchen Machine Ltd Ph: +852 2334 5411	**Thailand:**	Seven Five Distributors Co Ltd Ph: +662 866 5858
Italy	NOAW Ph: +39 0331 219723	**United Kingdom**	Metcalfe Catering Equipment Ph: +44 (0) 1766 830456
Malaysia:	Allied Food Equipment Ph: +603 9133 5833	**United Arab Emirates:**	Boncafe Middle East LLC +9714 282 8742
Maldives:	Radiant Heat Maldives Pty Ltd Ph: +960 333 4845	**United Arab Emirates:**	Nisa Trading LLC +9714 396 6132
New Zealand:	Roband New Zealand Ph: +649 274 1354	**U.S.A.**	Smart Kitchen Solutions Ph: +1 508 244 1365

© Copyright 2015 – Roband® Australia Pty Ltd

All rights reserved. No part of this work may be reproduced or copied in any form or by any means, electronic or mechanical, including photocopying or posting to a website, without the written permission of the publisher. The material contained within this document is intended entirely for instructional purposes.

CONTENTS

INTRODUCTION 1
GENERAL PRECAUTIONS 1
PACKAGING 2
COMPLIANCE 2
INSTALLATION 3
OPERATION 5
GENERAL SAFETY 8
CLEANING, CARE & MAINTENANCE 9
TROUBLESHOOTING 10
SPECIFICATIONS 11
CIRCUIT DIAGRAM – GT400 12
CIRCUIT DIAGRAM – GT700 12
CIRCUIT DIAGRAM – G400 13
CIRCUIT DIAGRAM – G700 13
GT400 EXPLODED VIEW 14
GT700 EXPLODED VIEW 15
G400 EXPLODED VIEW 16
G700 EXPLODED VIEW 17
APPENDIX A 18
EC DECLARATION OF CONFORMITY 19
WARRANTY 20

INTRODUCTION

Congratulations on your purchase of this quality ROBAND® product. With proper care and management your new purchase will give you years of trouble free service.

By reading these instructions carefully you can ensure that this machine is used and maintained properly, helping your new investment to perform well for you now, and to continue performing in the many years to come.

GENERAL PRECAUTIONS

This machine must only be operated by qualified person(s) who are fully versed in the operating and safety instructions described in this manual. Operators should be instructed to familiarise themselves with any and all safety instructions described in this manual prior to commencement of any maintenance or service.

These machines are heating units, and as with any commercial heating unit the surfaces on these Griddle's will get hot. Always be careful when near an operating Griddle, and ensure that any risk to unwary customers or staff is minimised with additional signage if necessary. Due to the obvious heat hazard Roband recommends that these units be kept out of reach of children.

In the case of new personnel, training is to be provided in advance. These machines should not be operated by persons (including children) with reduced physical, sensory or mental capabilities, or lack of experience or knowledge, unless they are being supervised or being instructed concerning the safe use of the appliance by a person responsible for their safety.

The machine should be disconnected from all power and allowed to cool before cleaning. Any damaged plug or cord should be replaced before further use.

These machines should not be cleaned with the use of a spray applicator, water jet or any other method except those outlined in the Cleaning & Care section of these instructions.

Roband will accept no liability if;

- Non-authorised personnel have tampered with the machine.
- The instructions in this manual have not been followed correctly.
- Non-original spare parts are used.
- The machine is not cleaned correctly, with the right product.
- There is any damage to the unit.

PACKAGING

All care is taken when packing and Roband ensures that every unit is functional and undamaged at the time of packaging.

The Package of this Griddle should include:

1) One Griddle Or Griddle Toaster (appropriate model)
2) This manual
3) Grease Box
4) Toasting Rack (Toaster Version only)
5) Crumb Tray (Toaster Version only)

Any damage to the machine as a result of freight must be reported to the Freight Company and to the agent responsible for the dispatch of said unit within 24 hours of receipt. No claims will be accepted or entertained after this period.

COMPLIANCE

RCM:
Roband® products have been designed and manufactured to comply with any and all specifications set out by the Australian Communications and Media Authority (ACMA) in regards to Electromagnetic Compatibility. As testament to such compliance these units bear the RCM symbol.

For further information contact the Australian Communications Authority, PO Box 13112, Law Courts, Melbourne VIC 8010.

CE:
Roband® products bearing the CE compliance mark have been designed and manufactured to comply with European Standards and Directives. A copy of the CE Declaration of Conformity is located at the back of these instructions.

INSTALLATION

Remove all the packaging materials and tape, as well as any protective plastic from the machine. Clean off any glue residue left over from the protective plastic using methylated spirit.

Place the Griddle / Griddle Toaster on a firm, level surface in the required position. Before connecting the Griddle to the power supply ensure that all the controls are in the "OFF" position. Turn all controls on and off to familiarise yourself with their operation

National Standards exist outlining the positioning, spacing and ventilation requirements when installing new appliances. These Standards should be consulted and new equipment should be installed accordingly. In any situation where specifications allow a distance of less than 100mm we would still *recommend* that a well-ventilated air gap of not less than 100mm be maintained. If the machine is near particularly heat-sensitive materials common sense should be employed in determining sufficient distancing.

Do not place the Griddle above other equipment that may give off heat.

POWER CONNECTION

G400 & GT400

Plug the machine into a power outlet matching the plug type supplied.

G700 & GT700

NOTE: GT700 and G700 models **MUST** be installed by a licenced electrician in accordance with Australian wiring Standards.

Suitable means for disconnection from power supply must be incorporated in the fixed wiring in accordance with the wiring rules.

Wiring to machine must be protected by suitable high temperature sleeving and inlet bushes.

Ensure all panels and components are re-fitted to machine before use.

The **GT700** is supplied ready for connection in a configuration of 3 Phase and Neutral Mains Supply, minimum 10A per Phase.

- If a single Phase 32A supply is to be used, connect the phase to L1 and a bridge must be inserted between L1 and L2, and L2 and L3 on the Terminal Block.
- If a 2-Phase minimum 20A per Phase supply is to be used, connect one phase each to L1 and L2 and a bridge must be inserted between L2 and L3 on the Terminal Block.

INSTALLATION CONTINUED…

The **G700** is supplied ready for connection in a configuration of 2 Phase and Neutral Mains Supply, minimum 10A per Phase.

- If a single Phase 20A supply is to be used, connect the phase to L1 and a bridge must be inserted between L1 and L2 on the Terminal Block.

We recommend the use of an **RCD (Residual Current Device)** rated at not less than 30mA for circuit protection when using these units. Note that if one RCD is used to protect multiple socket outlets, the RCD shall be appropriately rated so as to allow up to 30mA from these machines alone.

OPERATION

INITIAL STARTUP

To turn on the unit, turn the **Power** switch to the right (see below).

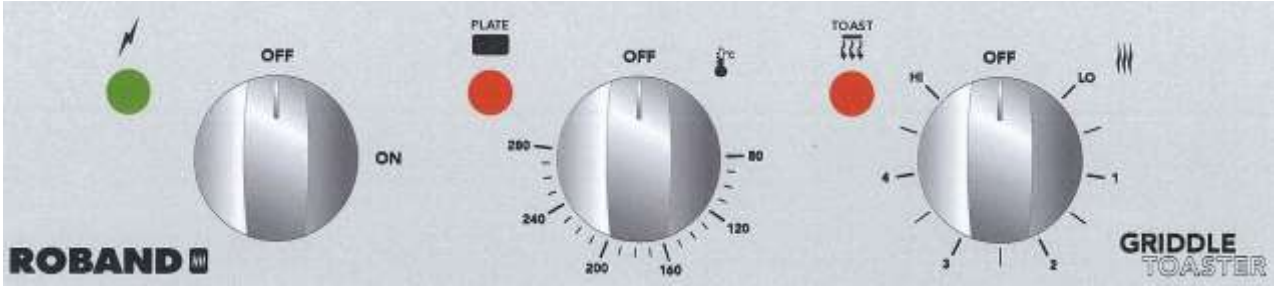

Power **Thermostat** **Energy Regulator**

CONTROLS DESCRIPTION

Power Switch	The **Power** switch disconnects the mains power supply from the machine. The green pilot light above and to the left of the switch will illuminate whenever the unit is switched on, indicating that power is being supplied to the unit. Turning the switch to “ON” activates all controls on the machine including thermostat(‘s) (for cooking plate) and Energy Regulator (for Toasting on Griddle Toaster models). NOTE: The cooking elements and/or toasting elements are not yet activated until a control setting other than “OFF” is selected.
Thermostat	The **Thermostat** controls the temperature of the cooking plate. The thermostat will cycle on and off to maintain the pre-set temperature. The temperature can be selected by using the dial indicator. Most cooking is carried out between 180°C and 240°C. When the thermostat is heating up, the amber pilot light closest to the control will be illuminated. When the set temperature has been reached, the pilot light will turn off.
Energy Regulator	The **Energy Regulator** controls the toasting element. (Toaster Version Only). Most efficient toasting is achieved when the toasting elements are on maximum. Max setting “HI” will run the toasting element continuously. An Idle setting of “**2**” can be used to keep the elements warm while not in use. This allows for faster heat up time when the toasting elements are required. The Heat setting can be selected by using the dial indicator. When the Energy Regulator is heating up, the amber pilot light closest to the control will be illuminated. When the control is not heating, the pilot light will turn off.

SEASONING

All Models:

Before cooking for the first time the plates need to be seasoned as follows.

- Remove the paper from the plate and wipe off excess fat.
- Brush the plate liberally with frying oil and cover the surface with a layer of salt.
- Set the thermostat to a temperature of around 180° and heat for around 25 minutes.
- Allow the oil and salt to cool, then remove it carefully without scratching the surface.
- Brush the plate with oil again and re-heat until the oil is burnt in. This will form a skin on the surface of the plate.
- Re-oil the surface once again.

Your Hot Plate is now ready for use.

OPERATION

- Lightly grease or oil the plates and set the **Thermostat** to the desired cooking temperature. Turn The Power switch ON. This will Illuminate the Green Pilot Light
- The Griddle Plate is thermostatically controlled. Rotate thermostat knob to select the desired cooking temperature.
- Allow a warm up time of around 20 minutes to pre-heat the plates before using for the first time each day.
- Select Desired Toasting rack position suitable for size of food to be toasted (If applicable – Only available on GT400 & GT700 models).
- Select desired toasting setting on Energy Regulator (If applicable – Only available on GT400 & GT700 models).

G700

The G700 is equipped with separate elements and controls for Left hand Side and Right Hand Side Operation. Each Half is controlled by its own thermostat. This means that they can be used simultaneously or individually as required and different temperature settings can be set for each side.

GT400

The GT400 has the advantage of an additional toasting element and multi-level toasting rack underneath the cooking plate. The toasting element is controlled by the Energy Regulator.

GT700

The GT700 is equipped with separate elements and controls for Left hand Side and Right Hand Side Operation. Each Half is controlled by its own thermostat or energy regulator. This means that each side and each function can be used simultaneously or individually as required and different temperature settings can be set for each.

The GT700 has the advantage of dedicated cooking elements and dedicated toasting elements as well as multi-level toasting rack underneath the cooking plate. The toasting elements are controlled by Energy Regulators while the cooking elements are controlled by Thermostats.

NOTE: Toasting is intended to be done simultaneously with the cooking plate. It is possible to use the toasting feature without the cooking plate, however the performance will not be as efficient as the toasting relies on heat generated by the cooking elements. If the primary purpose of the machine is Toasting, then a separate toasting machine would be recommended.

GREASE BOX:

The Griddles and Griddle Toasters have integrated grease-box's'. These can be removed by tilting the grease box forward to release the catch while simultaneously sliding forward.

CAUTION

Grease Box Contents should be checked at least once a day to ensure that contents is not full.

Take care when removing grease box as the handle and contents may be hot. We recommend emptying the grease box when the machine is cool.

SAFETY

GENERAL SAFETY

This machine contains no user-serviceable parts. Roband Australia, one of our agents, or a similarly qualified person(s) should carry out any and all repairs. Any repair person(s) should be instructed to read the Safety warnings within this manual before commencing work on these units.

Steel cutting processes such as those used in the construction of this machine result in sharp edges. Whilst any such edges are removed to the best of our ability it is always wise to take care when contacting any edge. Particular care should be taken when panels are removed (eg during servicing) as this may expose sharp edges.

Do not remove any cover panels that may be on the machine.

This unit can get **very hot**, ensure everyone is aware that the machine is operating and take care to avoid contact with hot surfaces. Hot surfaces should be left well ventilated with an air gap of at least 100mm, though common sense should be used if the machine is near heat-sensitive materials.

Always ensure the power cable is not in contact with hot parts of the machine when in use. Ensure that any damaged power cord is replaced before further use.

Do not clean this unit with the aid of a Spray Applicator or Water Jet.

These units are not suitable for cleaning in a dishwasher and no parts of these machines (except the grease box) should ever be submerged in water.

Keep out of reach of children or the inept.

CLEANING, CARE & MAINTENANCE

Attention to regular care and maintenance will ensure long and trouble free operation of your Griddle. Although scheduled servicing is not required we do recommend you adopt a program of regular maintenance to ensure that the Griddle is clean and functional and to avoid inadvertently damaging the unit.

Daily cleaning should be considered mandatory for all cooking equipment. In order to ensure the cooking plates are cleaned properly and to avoid damage the instructions below should be followed.

- Plates should be seasoned as per the instructions when the machine is first purchased. Generally, this should only ever need to be done once. This "seasoning" of the plates reduces food product sticking, protects the plates, and helps to maintain the foods flavour.
- Use a metal scraper in order to clean excess product from the plate during service and before cleaning at the end of service.
- Plates should be cleaned at the end of each day using a soft cloth dampened with only hot soapy water, with the machine **turned OFF** but while the plates are still warm. ***Do not under any circumstances use abrasive cleaning compounds or caustic cleaning agents.***
- **NEVER** put cold water or ice on hot plates at a medium to high temperature. This may cause the plates to buckle due to the sudden change in temperature.
- Using the scourer in the heel of your palm, you can put the weight of your upper torso behind the scrub and easily remove any built up residue. **Do not scrub back the plates too far!** If you scrub them so far back that they are shiny again, then you will need to re-season the plates. Remember that a light clean regularly is much easier than trying to remove a large build-up of burnt on food and carbon. Occasionally you may find that the plates have become very difficult to clean. Should this occur, and only if necessary, use a **NON-CAUSTIC** oven cleaner, leaving it on for no longer than 30 seconds and if necessary repeat. Ensure all *cleaner residue* is removed.

  (**Note:** some cleaning products are not as non-caustic as they say)

  HAZARD ♦ **Wipe** down the remainder of the machine with a cloth or sponge that is only DAMP with soapy hot water, taking care to avoid water entering any part of the Griddle. **Do not** clean with the use of a water jet, spray applicator or place the unit in a dishwasher. Spray applicators can result in liquid penetrating the switches on the machine, causing dangerous electrical situations, damage to the machine, and voiding any warranty.

  HAZARD ♦ Use only soapy water on a damp cloth or sponge when cleaning (soapy water is made by adding mild hand dishwashing detergents to water). Other cleaning chemicals can result in damage to parts of the machine. Many cleaning chemicals are unsuited to polycarbonates or plastics, and may also damage stainless steel and aluminium.

♦ Although every care is taken during manufacture to remove all sharp edges, care should be taken when cleaning to avoid injury.

MAINTAINING APPEARANCE OF THE STAINLESS

- For protection and cleaning of “brushed” stainless steel surfaces, it is best to use a cleaner that will both remove grease and dirt while protecting the surface from future marks. Whilst there are many possible products on the market, our tests have shown that the following products work well on brushed stainless surfaces.
    - Stainless Steel Polish (Water based) - Supplied by Clean Plus Detergents Pty Ltd
    - Simple Green Pro M cleaner – Supplied by Simple Green

TROUBLESHOOTING

If the Griddle does not heat up check the following points before calling for service.

- ✓ The Griddle is plugged in or connected correctly and the power switched on.
- ✓ The power point is not faulty.
- ✓ The power supply circuit breaker or fuse is operating correctly
- ✓ The Power supply to the Griddle has been switched on
- ✓ The On/Off switch has been set to the ON position
- ✓ The temperature has been set correctly and the green pilot light is illuminated indicating the machine has power.
- ✓ The **Thermostat** knob is not loose or broken, rendering the thermostat inoperable.
- ✓ Check Appendix A at the back of this manual - RCD’S

NOTE: A licenced Electrician **must** install or disconnect All G700 & GT700 models.

SPECIFICATIONS

Model	G400	GT400	G700	GT700
Power Supply	230V	230V	400/230V 2P	400/230V 2P
Power Frequency	50-60Hz			
Power Consumption	2120W	2980W	4240W	5900W
Amps	9.2A	13A	9.2A/P	12.8A/P
Width mm	421	421	725	725
Height mm	260	375	255	375
Depth mm	496	496	527	527
Weight kg	25	27	38	45
Cooking Area mm	398x398	398x398	700x398	700x398

Constant research and development may necessitate specification changes at any time.

CIRCUIT DIAGRAM – GT400

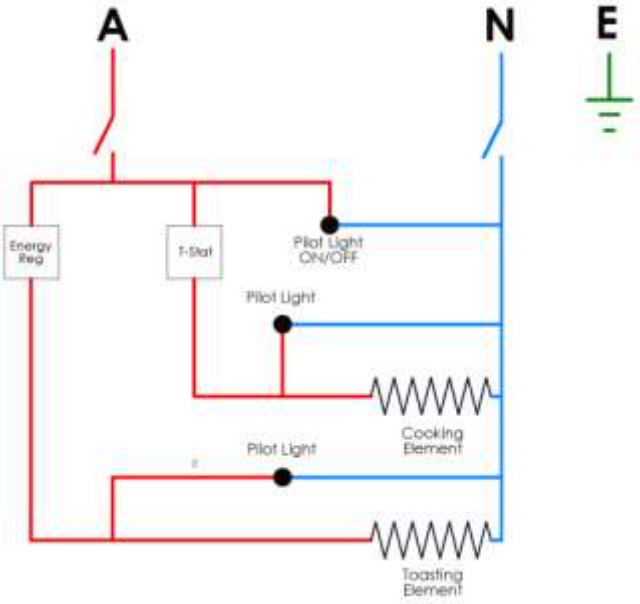

CIRCUIT DIAGRAM – GT700

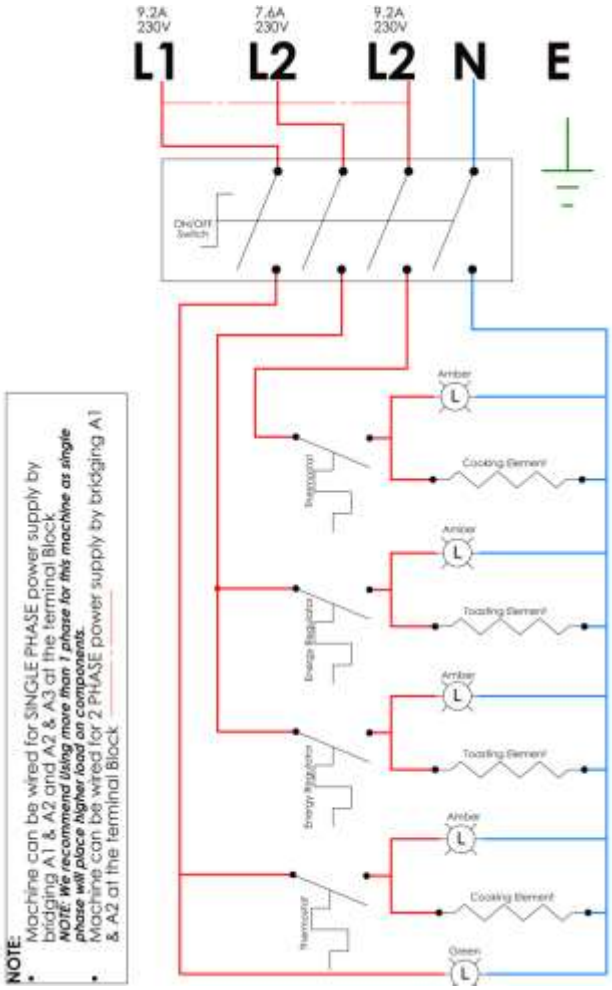

CIRCUIT DIAGRAM – G400

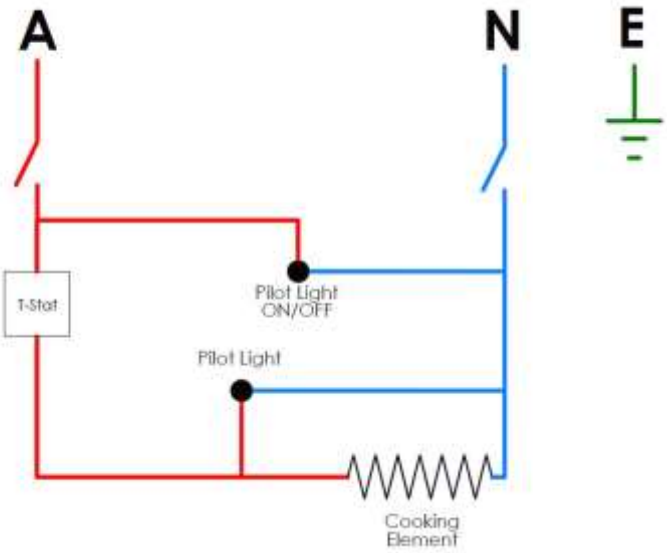

CIRCUIT DIAGRAM – G700

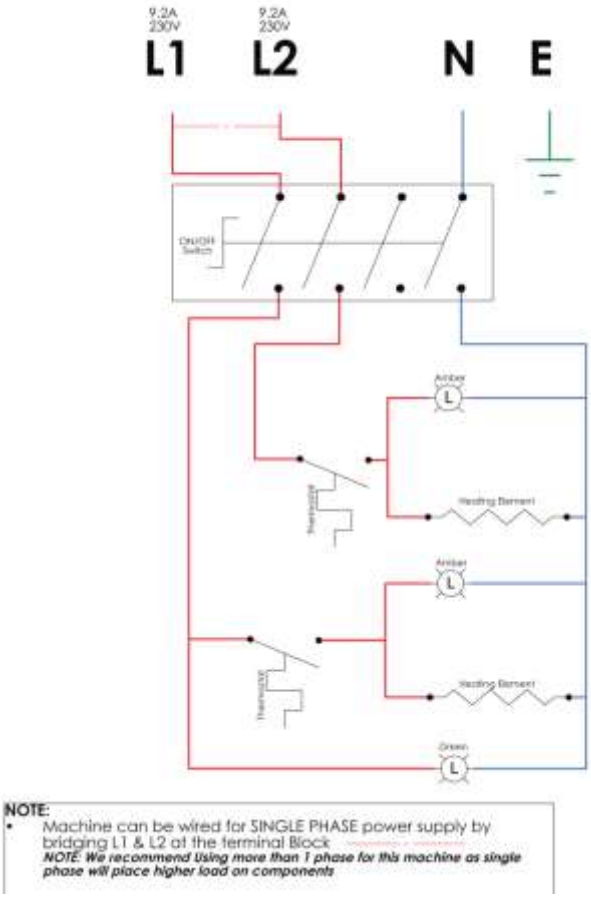

Note: This circuit diagram has been provided for reference and to assist qualified service and repair agents only. Under no circumstances should persons not suitably qualified attempt repairs to any electrical equipment.

GT400 EXPLODED VIEW

ITEM NO.	PART NUMBER	DESCRIPTION	QTY.
1	EC0031	Terminal Block - Porcelain	1
2	EC0306	Plug & Cord - Black Elastomer 15Amp	1
3	ES0264	Pilot Light and Viton O-ring - Amber, 10mm screwed (includes nut)	2
4	ES0265	Pilot Light and Viton O-ring - Green, 10mm screwed (includes nut)	1
5	ES0283	Rotary Switch & Al Knob	1
6	HC0158	Element 2300W 230V	1
7	HC0166	Element	1
8	MC0062	Screw - 8G x 3/8" self tapper, hardened, Torx	24
9	MC0279	Nutsert - M8 Thin Sheet	4
10	MC0283	Rivet - 73MS 4-1 Truss Head SS	10
11	MC0417	Nut M6 Steel Hex ZP	8
12	MC0557	Washer - 1/4" x 3/32" x 1/16" Spring ZP	8
13	MC0565	Screw M4 x 5 Button Head Torx ZP	6
14	MC0602	Washer - 1/4" x 5/8" OD x 1mm - SS Flat	8
15	MC0688	Nut - M4 SS	1
16	MC0695	Screw M4 x 25 Pan Hd Torx SS	1
17	MC0915	GT400 Wire Rack	1
18	MS0388	Earth Screw Assembly	1
19	NC0070	Label - Made in Australia, self adhesive	1
20	NC0071	Label - Gold Warranty, self adhesive	1
21	NS0001	Rating Plate Assembly - Plain	1
22	PC0061	Cord Clamp 15A	1
23	PC0072	Bush Nylon Ø5-8 inch	1
24	PS0094	Foot cw Nut Set	4
25	SS2639	Side Panel L/H Inner - Griddle Toaster	1
26	SS2640	Side Panel R/H Inner - Griddle Toaster	1
27	SS2641	Side Panel L/H Outer - Griddle Toaster	1
28	SS2642	Side Panel R/H Outer - Griddle Toaster	1
29	SS2651	Thermostat Bulb Clamp - Griddle Toaster	1
30	SS2662	Control Box	1
31	SS2663	Bottom Cover	1
32	SS2664	Crumb Tray	1
33	SS2665	Rear Cover - GT415	1
34	SS2666	Back Panel Inner - GT415	1
35	SS2667	Front Facia - GT415	1
36	SS2668	Element Clamp - GT415	2
37	TS0020	285°C T-Stat with Aluminium Knob	1
38	TS0021	Energy Regulator & Aluminium Knob	1
39	VS0259	Side Rack Assembly	2
40	WS0009	Griddle Toaster Grease Box - Weldment	1
41	WS0010	Plate Assembly	1

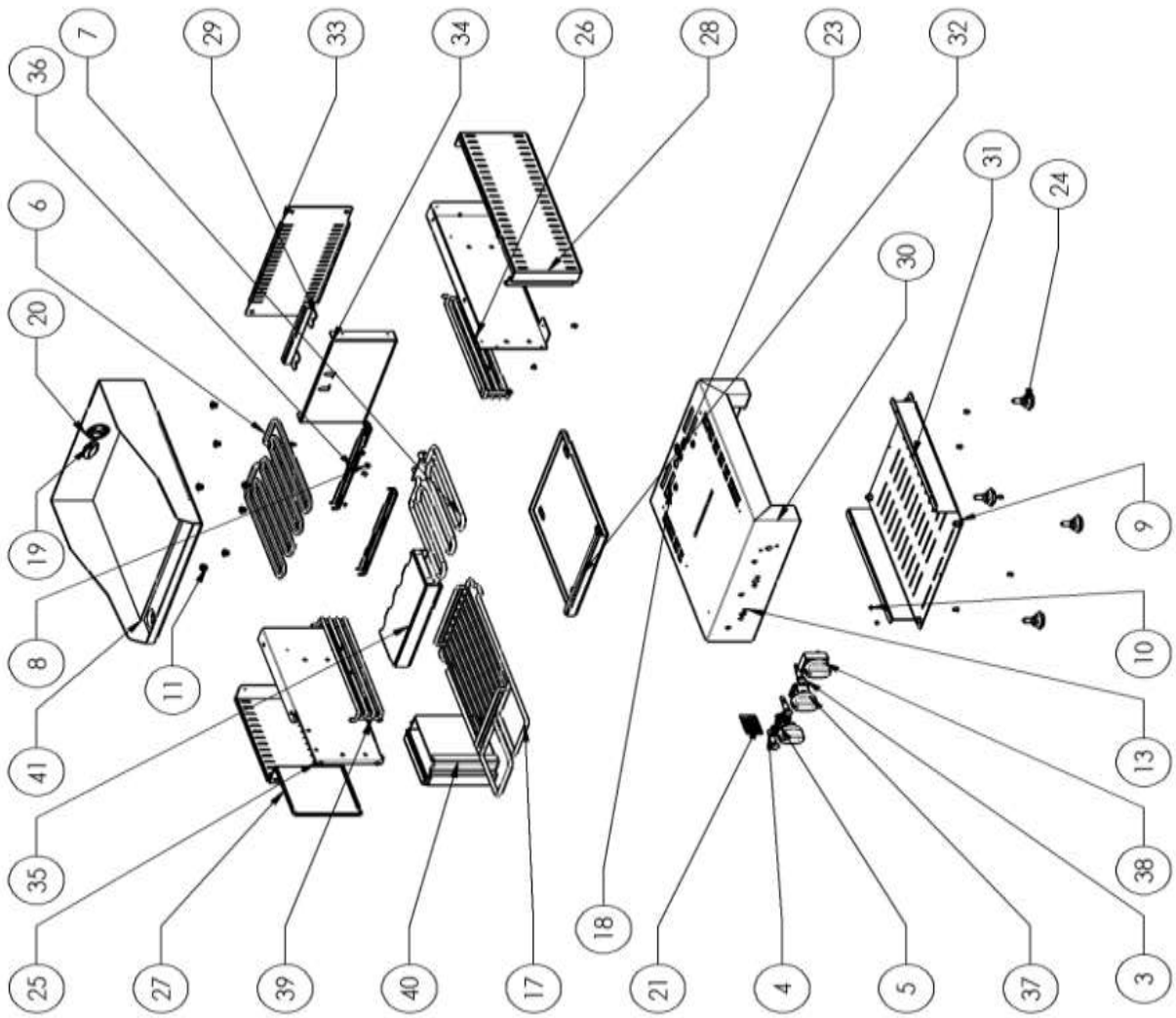

GT700 EXPLODED VIEW

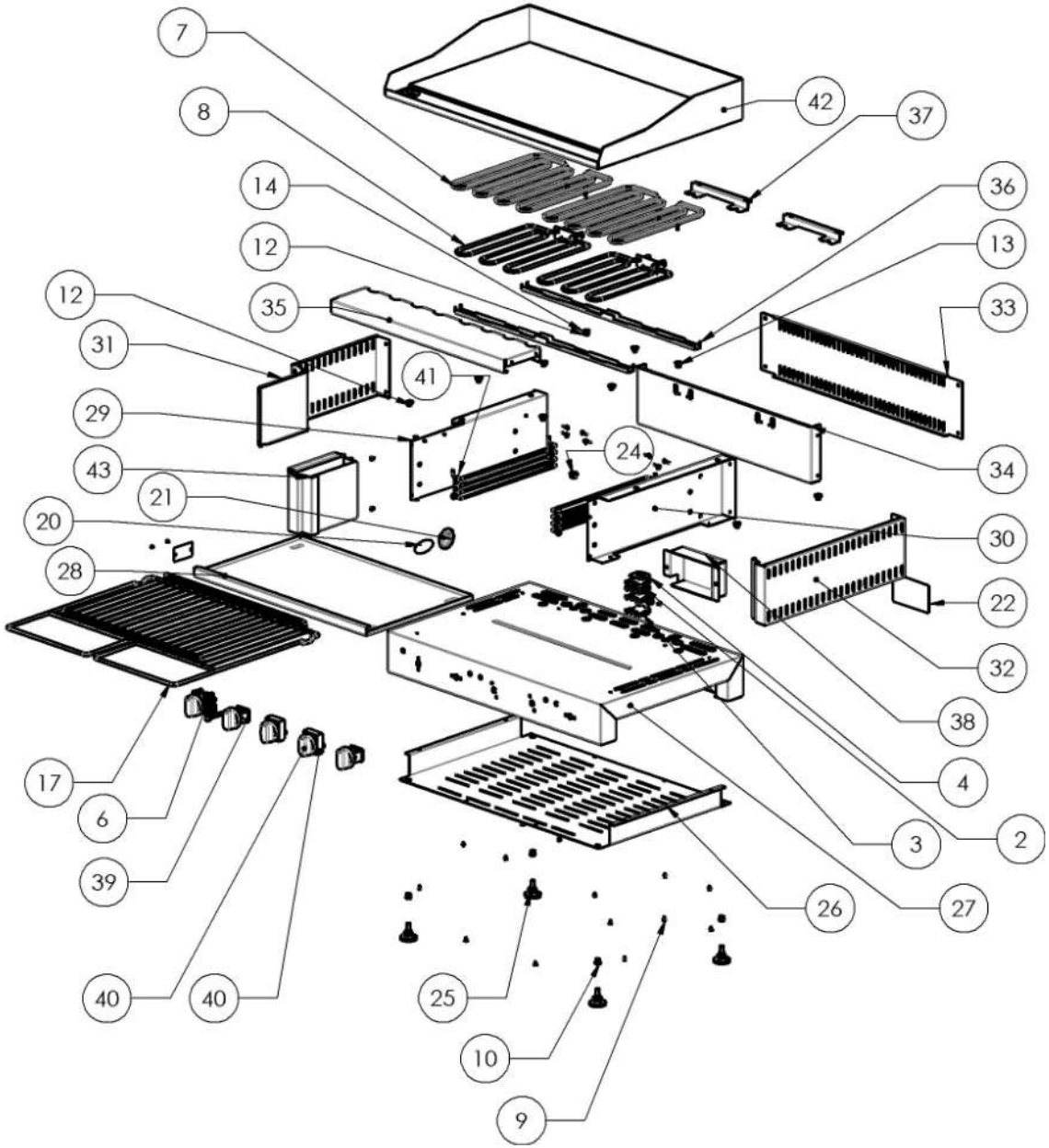

ITEM NO.	PART NUMBER	DESCRIPTION	QTY.
1	EC0128	5mm Eyelet Terminal	8
2	EC0427	Rail Mounted Terminal Block Red 41A	3
3	EC0428	Rail Mounted Terminal Block Blue 41A	1
4	EC0429	End Cap - Rail Mounted terminal block	1
5	ES0265	Pilot Light and Viton O-ring - Green, 10mm screwed (includes nut)	1
6	ES0282	Switch 2 Pos 8 Pole and Aluminium Knob	1
7	HC0158	Element 2300W 230V	2
8	HC0166	Element	2
9	MC0062	Screw - 8G x 3/8" self tapper, hardened, Torx	30
10	MC0279	Nutsert - M8 Thin Sheet	4
11	MC0283	Rivet - 73M5 4-1 Truss Head SS	10
12	MC0417	Nut M6 Steel Hex ZP	11
13	MC0557	Washer - 1/4" x 3/32" x 1/16" Spring ZP	11
14	MC0602	Washer - 1/4" x 5/8" OD x 1mm - SS Flat	11
15	MC0688	Nut - M4 SS	4
16	MC0699	Nut - M5 Stainless	1
17	MC0927	Rack With Bread Stop	1
18	MC0954	M4 Washer - Ø4 x Ø9 x 1mm	8
19	M60388	Earth Screw Assembly	1
20	NC0070	Label - Made in Australia, self adhesive	1
21	NC0071	Label - Gold Warranty, self adhesive	1
22	NC0079	Label - Colourbond Disconnection Warning	1
23	N50001	Rating Plate Assembly - Plain	1
24	PC0072	Bush Nylon Ø5-8 Inch	3
25	PS0094	Foot cw Nut Set	4
26	SS2636	Bottom Cover	1
27	SS2637	Control Box	1
28	SS2638	Crumb Tray	1
29	SS2639	Side Panel L/H Inner - Griddle Toaster	1
30	SS2640	Side Panel R/H Inner - Griddle Toaster	1
31	SS2641	Side Panel L/H Outer - Griddle Toaster	1
32	SS2642	Side Panel R/H Outer - Griddle Toaster	1
33	SS2647	Rear Cover- GT727	1
34	SS2648	Back Panel Inner - GT727	1
35	SS2649	Front Facia - GT727	1
36	SS2650	Element Clamp - GT727	2
37	SS2651	Thermostat Bulb Clamp - Griddle Toaster	2
38	SS2652	Junction Box - GT727	1
39	TS0020	285°C T-Stat with Aluminium Knob	2
40	TS0021	Energy Regulator & Aluminum Knob	2
41	VS0259	Side Rack Assembly	2
42	W50008	Plate Assembly	1
43	W50009	Griddle Toaster Grease Box - Weldment	1

ROBAND AUSTRALIA PTY LTD

G400 EXPLODED VIEW

ITEM NO.	PART NUMBER	DESCRIPTION	QTY.
1	EC0031	Terminal Block - Porcelain	1
2	EC0128	6mm Eyelet Terminal	2
3	EC0239	10A Cord	1
4	ES0264	Pilot Light and Viton O-ring - Amber, 10mm screwed (includes nut)	1
5	ES0265	Pilot Light and Viton O-ring - Green, 10mm screwed (includes nut)	1
6	ES0283	Rotary Switch & Al Knob	1
7	HC0158	Element 2300W 230V	1
8	MC0062	Screw - 8G x 3/8" self tapper, hardened, Torx	19
9	MC0279	Nutsert - M8 Thin Sheet	4
10	MC0283	Rivet - 73M6 4-1 Truss Head	2
11	MC0417	Nut M6 Steel Hex ZP	12
12	MC0557	Washer - 1/4" x 3/32" x 1/16" Spring ZP	8
13	MC0565	Screw M4 x 5 Button Head Torx ZP	4
14	MC0602	Washer - 1/4" x 5/8" OD x 1mm - SS Flat	16
15	MC0688	Nut - M4 SS	3
16	MC0695	Screw M4 x 25 Pan Hd Torx SS	1
17	MC0954	M4 Washer - Ø4 x Ø9 x 1mm	4
18	MS0388	Earth Screw Assembly	1
19	NS0001	Rating Plate Assembly - Plain	1
20	PC0072	Bush Nylon Ø5-8 Inch	1
21	PC0482	90° Cord Grip 10A & 15A Rubber Cords	1
22	PS0094	Foot c/w Nut Set	4
23	SS2651	Thermostat Bulb Clamp - Griddle Toaster	1
24	SS2668	Element Clamp - GT415	2
25	SS2750	Lower Cover	1
26	SS2751	Base	1
27	SS2752	Mid Panel	1
28	SS2753	Control Box	1
29	SS2754	Element Guard	1
30	TS0020	285°C T-Stat with Aluminium Knob	1
31	WS0006	Griddle Toaster Grease Box - Weldment	1
32	WS0012	Plate Assembly	1

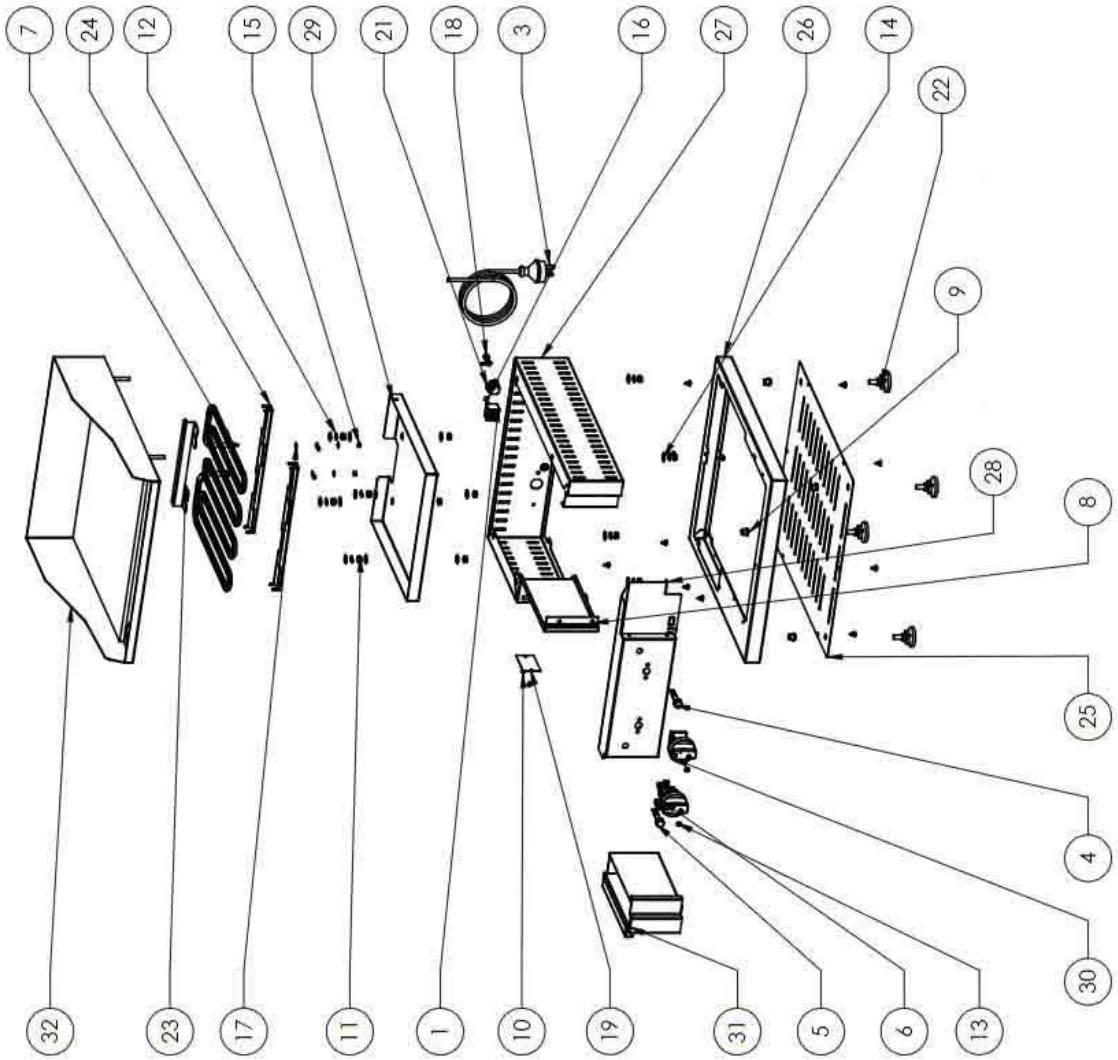

G700 EXPLODED VIEW

ITEM NO.	PART NUMBER	DESCRIPTION	QTY.
1	EC0427	Rail Mounted Terminal Block Red 41A	3
2	EC0428	Rail Mounted Terminal Block Blue 41A	1
3	EC0429	End Cap - Rail Mounted terminal block	1
4	552254	Pilot Light and Viton O-ring - Amber, 10mm screwed (includes nut)	3
5	552255	Pilot Light and Viton O-ring - Green, 10mm screwed (includes nut)	1
6	552252	Switch 2 Pos 8 Pole and Aluminium knob	1
7	HC0138	Element 2350W 230V	2
8	MC0002	Screw - 6/32 x 3/8" self tapping, flattened head, Tinx	36
9	MC0279	Nutsert - M6 Rib Sheet	4
10	MC0283	Rivet - 7/32" 4-1 Truss Head SS	2
11	MC0417	Nut M6 Steel Hex JP	16
12	MC0355	Washer - 1/4" x 3/32" x 1/16" Spring JP	11
13	MC0446	Screw M4 x 8 Button Head Torx JP	4
14	MC0402	Washer - 1/4" x 5/8" OD x 1mm - SS Flat	25
15	MS0380	Earth Screw Assembly	1
16	MS0001	Rating Plate Assembly - Plain	1
17	PC0072	Sure Nylon 6/6-8 inch	2
18	PS0864	Twist on Nut Set	4
19	SS2650	Element Clamp - G1727	2
20	SS2651	Thermostat Bulb Clamp - Griddle Toaster	2
21	SS2741	Lower Cover	1
22	SS2742	Base	1
23	SS2743	Mid Panel	1
24	SS2744	Control Box	1
25	SS2745	Element Guard	1
26	SS2746	Junction Box - G700	1
27	TS0020	32amp 3-Start with Aluminium Knob	2
28	WS0016	Griddle Toaster Storage Box - Assembled	1
29	WS0011	Plate Assembly	1

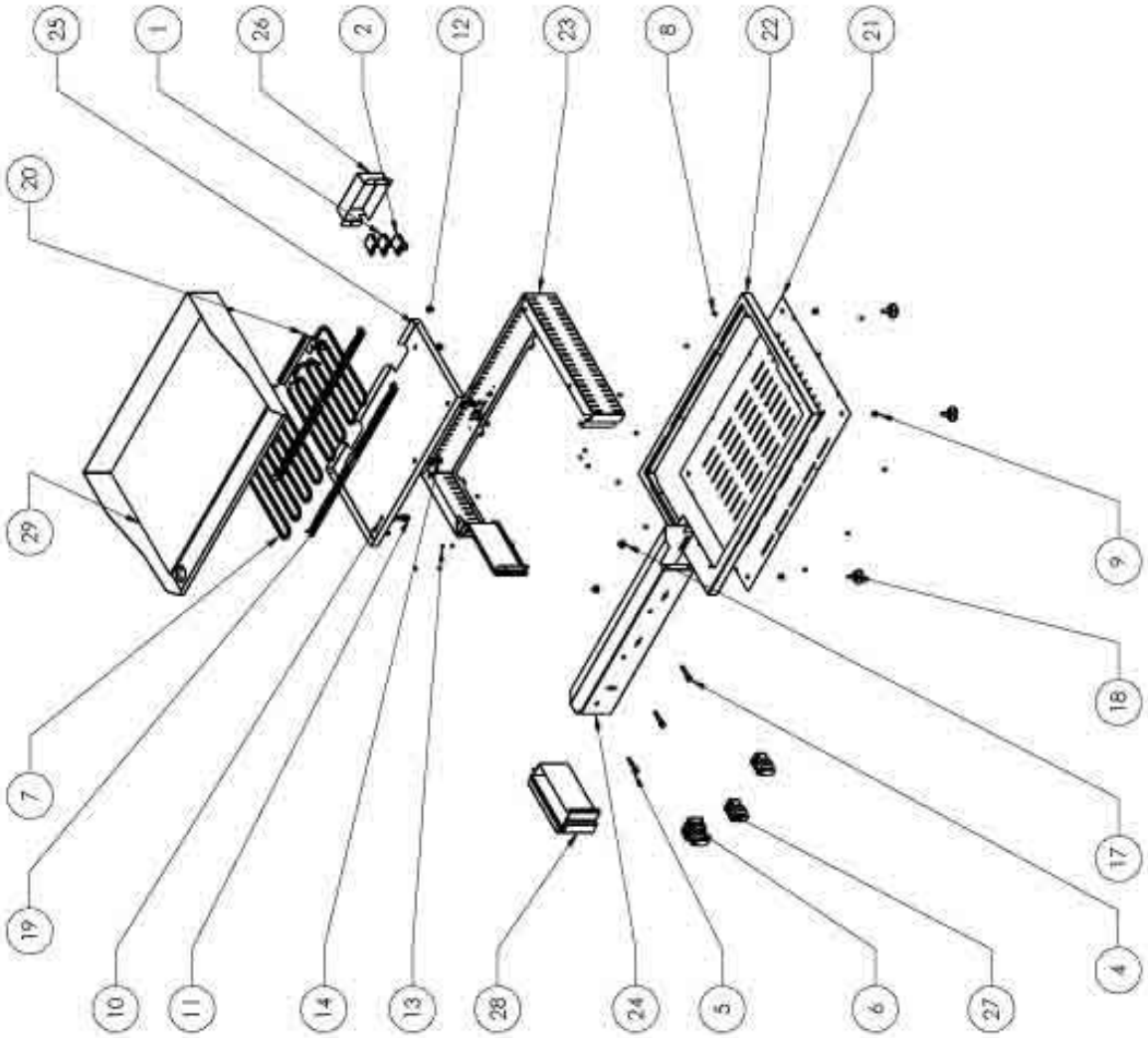

APPENDIX A

RESIDUAL CURRENT DEVICES (RCD'S)

Also known as Earth Leakage Protection systems an RCD is a protective device that automatically disconnects the live conductors of a circuit when an earth leakage current reaches a predetermined value.

Australian and International Standards detail when and where RCD's are to be used in electrical installations, but common practice in many countries is to use a 30mA RCD in general commercial applications. This is typically done because 30mA RCD's are readily available and are used in domestic installations.

For Commercial installations, and for socket-outlets providing power to commercial heating equipment (Toasters, Bains Marie, Grillers), 30mA RCD's are typically unsuitable unless they are protecting only one device. Higher rated RCD's should be considered if protecting multiple socket-outlets, giving appropriate consideration to the type of equipment being protected.

AS/NZS3000 2.5.2 gives the following warnings that should have been taken into consideration when an RCD circuit was installed.

> *To avoid unwanted tripping due to leakage currents and transient disturbances, care should be taken to ensure that the sum of the leakage currents of electrical equipment on the load side of an RCD is less than 1/3 of its rated residual current.*
>
> *To avoid excessive leakage current causing unwanted tripping where socket-outlets are protected by one RCD having a rated residual current not greater than 30mA, consideration should be given to the number of socket-outlets protected and the nature of electrical equipment likely to be connected to the socket-outlets.*

Tubular elements (such as those used in this unit) reaching temperatures greater than 110°C are subject to moisture absorption and therefore earth leakage current generation. Should the installation and use of this unit trip an RCD the unit will need to be run on a circuit without an RCD for approximately 30-60 minutes, after which time the elements should have dried out and the machine should function normally. If you are unable to locate a circuit without an RCD please contact your supplier or contact Roband or our Agent for alternative suggestions.

EC DECLARATION OF CONFORMITY

Manufacturer	Roband Australia 1 Inman Rd Cromer NSW, 2099 Australia
Model Type	Griddle / Griddle Toaster
Description	Griddle / Griddle Toaster
Date of first CE Marking	1st Sep 2010
Specific Models	G400, G400R, G700, GT400 & GT700

STANDARDS:

This machine is designed in compliance with

- Machinery Directive 2006/42/EC
- Low Voltage Directive 2006/95/EC
- EMC Directive 89/336/EEC including amendments to 93/68/EEC
- WEEE Directive 2002/96/EC (WEEE)
- Restriction of Hazardous Substances in Electrical and Electronic Equipment 2002/95/EC (RoHS)
- EN60335.1 Household and similar Electrical Appliances
- EN60335-2-48 Commercial Electric Toasters and Grillers
- EN55014.2: 1997 Electromagnetic compatibility. Requirements for household appliances, electric tools and similar apparatus. Immunity.

ENVIRONMENTAL:

This product is designed in order to contribute as little as possible to the quantity and noxious nature of waste and risk of pollution or other environmental contamination.

Packaging materials used in this machine are designed to be recyclable.

DECLARATION

I hereby declare under our sole responsibility that the product mentioned above to which this declaration relates complies with the above-mentioned standard(s).

Roband Australia has appointed Valera Ltd as our EU Authorised Representative of :
5-7 The Glade Business Centre, Eastern Ave, West Thurrock, Essex, RM203FH , UK.
Tel: 08 45 270 4321 Fax: 0845 270 4323 E-Mail : info@valera.co.uk

Signature of Authorised Person:_____ Date: 1st Sep 2010

Print Name: Mal Johnston Position: Director of Engineering

WARRANTY

Every care is taken to ensure that no defective equipment leaves our factory and all goods manufactured by us are guaranteed against defective workmanship and materials for a period of 12 months from the date of purchase. Roband Australia's obligations pursuant to this express warranty being limited to the repair or replacement of the defective goods or materials, at is option and subject to the terms contained within this Warranty statement. Where relevant, glass, Teflon® and lamps are **not** included in this warranty and RCD tripping due to moisture absorption by Tubular Heating Elements is not considered a warranty fault.

Generally, all goods claimed under this warranty must be returned to the factory or an authorized service agent, freight prepaid, for inspection. All parts deemed to be defective will be replaced, however, no claims will be entertained for second hand products, or parts damaged in transport, misused or modified in any way without our approval. For machines that are not considered to be portable (e.g. food bars, rotisseries, large hotplates and some bain maries), on site warranty service will be provided in capital city metropolitan areas only. In all other locations, the customer is responsible for all travelling time/service call costs and payment for this will be required prior to the commencement of the repair. The labour costs to actually repair the fault will be met by the company.

Any repairs or replacement of defective goods or materials pursuant to this warranty, must be authorized by Roband Australia prior to any action being taken. The company reserves the right to reject a claim for warranty if it is not completely satisfied with the circumstances under which it occurred and any other costs incurred for false claims or faults due to incorrect usage etc. are the responsibility of the claimant. Roband Australia Pty Ltd nor any subsidiary company or Agent shall be liable for loss of profit or damage to other equipment and property except where it is in breach of the guarantees provided in accordance with Schedule 2 of the Competition and Consumer Act 2010 (Cth) or the applicable legislation from time to time.

The goods come with guarantees that cannot be excluded under the Australian Consumer Law (ACL). You are entitled to a replacement or refund for a major failure and for compensation for any other reasonably forseeable loss or damage. You are also entitled to have the goods repaired or replaced if they fail to be of acceptable quality and the failure does not constitute a major failure.

Generally, authorized service agents are located in all areas which have authorized distribution dealers. For the name of your nearest Australian authorised service agent, please contact:

Roband Australia Pty Ltd

1 Inman Road, Cromer, NSW 2099

Warranty Number: 1800 268 848

Phone: (02) 9971 1788 Fax: (02) 9971 1336

All other countries please contact your selling Agent.

Please complete the following details and keep this card in a safe place.

NAME_____

ADDRESS_____

MODEL No:_____SERIAL No: _____DATE PURCHASE_____

NAME OF DEALER:_____

PLEASE RETAIN THIS SECTION FOR YOUR RECORDS

DO NOT POST

ROBAND® AUSTRALIA PTY LTD

OTHER LEADING PRODUCTS AVAILABLE:

Sycloid Toaster

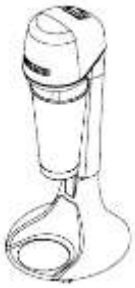

DRINK MIXERS

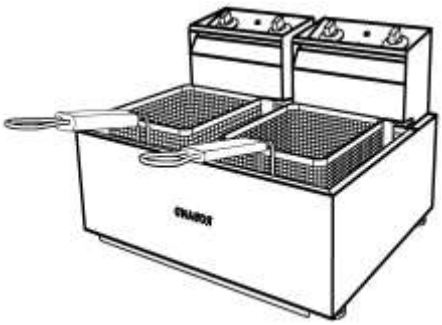

HIGH PERFORMANCE DEEP FRYERS

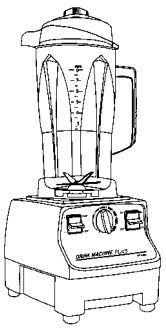

VITAMIX BLENDERS

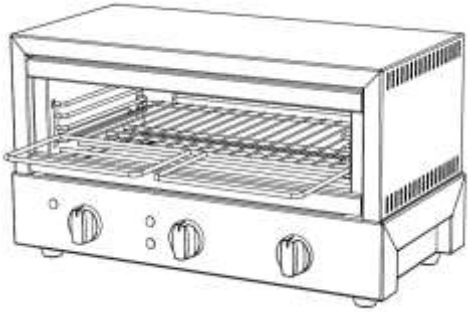

GRILLMAX TOASTERS

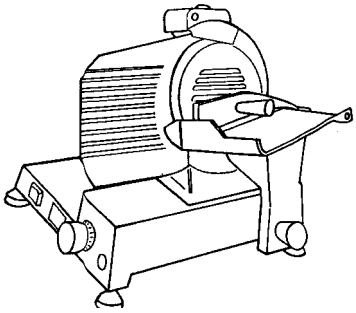

NOAW Slicers

Manufactured/Imported in Australia by:

ROBAND AUSTRALIA PTY LTD

Authorised Distributor/Agent