MANUFACTURED BY

ROBAND AUSTRALIA PTY LTD

OPERATING INSTRUCTIONS

DOUBLE PAN FRYERS

MODELS: F25, F25E, F28, & F28E.

Version 3

F25-UK

Version 1

Special Features:

Safety Over-Temperature Cutout as Standard
Advanced Control Safety Systems
Ultra-Durable Stainless Steel Elements
Superior Reliability & Longevity

These instructions cover the models of ROBAND® Double Pan Fryers listed above. Although there are slight variances between models, the installation, operation, care and maintenance procedure is the same for all.

Roband®

Roband Australia is a wholly Australian owned company and has been manufacturing quality commercial catering equipment for the food service industry for more than 50 years. Roband products are engineered and manufactured to the highest standards to provide functionality, reliability and durability, and our quality products are exported world-wide.

Included in the comprehensive ROBAND® range are Toasters, Fryers, Milkshake Mixers, Rotisseries, Food Display Cabinets and much more.

Roband Australia also acts as the Australian agents for Vitamix® Blenders, NOAW® Meat Slicers, RYNO Stainless Benching, Robalec™ Soup/Rice warmers and Dito Food Processors.

In addition to a vast range of machines, Roband Australia has its own line of commercial cookware and cutlery under the Robinox® brand name.

For a complete set of brochures please contact your nearest authorised dealer or contact Roband directly at our head office.

Roband Australia Pty Ltd
11 Inman Road
DEE WHY
NSW 2099
Australia
Telephone: 61 – 2 – 9971 1788
Facsimile: 61 – 2 – 9971 1336
E-mail: sales@roband.com.au
Website: www.roband.com.au

For additional Agents in other Countries please email Roband Head office.

International Agents

Canada:	Lessard Agencies Ph +1 416 766 2764
Europe:	Valera Ltd, (UK) 0845 270 4321 info@valera.co.uk
Fiji:	Hotel Equipment Ph +679 672 0666
Hong Kong:	Chung Wah Ph +852 2334 5411
New Zealand:	Roband New Zealand Ph +649 274 1354
Papua New Guinea:	Brian Bell Ph +675 325 5411
Saudi Arabia:	A S Al Jared Establishment Ph +996 2 6451 451
Singapore:	Jelco Private Ltd Ph +65 5611 988
Thailand:	Seven Five Distributors Ph +662 866 5869

© Copyright 2000 – Roband Australia Pty Ltd

All rights reserved. No part of this work may be reproduced or copied in any form or by any means, electronic or mechanical, including photocopying or posting to a website, without the written permission of the publisher. The material contained within this document is intended entirely for instructional purposes.

CONTENTS

INTRODUCTION **4**
GENERAL PRECAUTIONS **4**
PACKAGING **5**
COMPLIANCE **5**
C-Tick: 5
CE: 5
ACSS (Advance Control Safety System): 5
INSTALLATION **6**
OPERATION **8**
GENERAL SAFETY **10**
SAFETY FEATURES 10
GENERAL FIRE SAFETY 10
CLEANING, CARE & MAINTENANCE **11**
TROUBLESHOOTING **12**
*CIRCUIT DIAGRAM** *13*
Models F25, F25E, F28, F28E 13
SPECIFICATIONS **14**
EXPLODED DIAGRAM **15**
F25 15
F28 16
NOTES **17**
Tips for Healthy Frying *18*
TIPS ON DEEP FRYING CHIPS **19**
APPENDIX A **21**
Residual Current Devices (RCD's) 21
EC DECLARATION OF CONFORMITY **22**
Warranty *23*

INTRODUCTION

Congratulations on your purchase of this quality ROBAND® product. With proper care and management your new purchase will give you years of trouble free service.

By reading these instructions carefully you can ensure that this machine is used and maintained properly, helping your new investment to perform well for you now, and to continue performing in the many years to come.

GENERAL PRECAUTIONS

This machine must only be operated by qualified person(s) who are fully versed in the operating and safety instructions described in this manual. Servicepersons should be instructed to familiarise themselves with any and all safety instructions described in this manual prior to commencement of any maintenance or service.

In the case of new personnel, training is to be provided in advance. These machines should not be operated by persons (including children) with reduced physical, sensory or mental capabilities, or lack of experience or knowledge, unless they have been given supervision or instruction concerning the safe use of the appliance by a person responsible for their safety.

These machines are heating units, and as with any commercial heating unit the surfaces on these Fryers will get hot. Always be careful when near an operating fryer, and ensure that any risk to unwary customers or staff is minimised with additional signage if necessary. Due to the obvious heat hazard Roband recommends that these units be kept out of reach of children.

These Fryers are for use with oil. The machines are not designed for use with water for such task as cooking pasta, and any such misuse will void the warranty.

The machine should be disconnected from all power and allowed to cool before cleaning.

Roband will accept no liability if;

- Non-authorised personnel have tampered with the machine.
- The instructions in this manual have not been followed correctly.
- Non-original spare parts are used.
- The machine is not cleaned correctly, with the right product.
- There is any damage to the unit.

PACKAGING

All care is taken when packing and Roband ensures that every unit is functional and undamaged at the time of packaging.

The Package of these Fryers should include:
1) One Fryer (appropriate model)
2) Two Control Boxes (appropriate types)
3) Two Fryer Baskets
4) This manual
5) Packaging materials

Any damage to the machine as a result of freight must be reported to the Freight Company and to the agent responsible for the dispatch of said unit within three (3) days of receipt. No claims will be accepted or entertained after this period.

COMPLIANCE

C-Tick:

Roband® products have been designed and manufactured to comply with any and all specifications set out by the Australian Communications Authority (ACA) in regards to Electromagnetic Compatibility. As testament to such compliance these units bear the C-Tick symbol.

For further information contact the Australian Communications Authority, PO Box 13112, Law Courts, Melbourne VIC 8010.

CE:

Roband® products bearing the CE compliance mark have been designed and manufactured to comply with European Standards and Directives. A copy of the CE Declaration of Conformity is located at the back of these instructions.

ACSS (Advance Control Safety System):

The ACSS framework is a stringent and specific set of voluntary requirements aimed at the electrical safety, reliability and longevity of equipment used in the foodservice industry.

The ACSS framework has been developed as both a guide to the engineering and development of products as well as a guarantee to consumers that Roband equipment bearing this mark not only meets the requirements of the Australian Standards, they exceed them.

A unit bearing the ACSS mark is your guarantee that you are purchasing a machine built to far exceed the Australian standards. The unit has been designed to be safer, particularly from an electrical aspect, and last longer than similar units on the market today.

INSTALLATION

Remove all the packaging materials and tape, as well as any protective plastic from the machine. Clean off any glue residue left over from the protective plastic.

Place the fryer on a firm, level surface in the required position. The feet can be adjusted for an uneven surface. Take a moment to familiarise yourself with the general arrangement of the fryer before going any further. Notice the activating switch located beneath the control box. The round activating boss attached to the body of the fryer will activate this switch. Never remove the activator boss.

National Standards exist outlining the positioning, spacing and ventilation requirements when installing new appliances. These Standards should be consulted and new equipment should be installed accordingly. In any situation where specifications allow a distance of less than 100mm we would still recommend that a well-ventilated air gap of not less than 100mm be maintained. If the machine is near particularly heat-sensitive materials common sense should be employed in determining sufficient distancing.

The elements and controls are designed as separate components to the body and pans. These are referred to as the control boxes. The main switches, thermostats and pilot lights are located on the face of each control box. There are two control boxes on each fryer.

The control boxes can be tilted back and rested in the upright position or removed altogether from the fryer body. Once removed, the pans may then be removed by sliding your fingers beneath the lip and lifting them out.

Caution: Ensure pans are cooled before attempting to remove them.

Before connecting the fryer to the power supply ensure that **all** the controls are in the "**OFF**" position.

For models, F25 and F25T plug each control box of the fryer into a standard, single phase, 10Amp power point.

For models, F25E, F25ET, F28E and F28ET plug each control box of the fryer into a standard, single phase, 13Amp power point.

For models, F28 and F28T plug each control box of the fryer into a standard, single phase, 15Amp power point.

Please Note: Each control box **must** be connected to an individual power circuit.

We recommend the use of an RCD (Residual Current Device) rated at not less than 30mA for circuit protection when using these units. Note that if one RCD is used to protect multiple socket outlets, the RCD shall be appropriately rated so as to allow up to 30mA from these machines alone.

OPERATION

Place the pans in the fryer body. Place the control boxes in position and the element guards over the element in the bottom of each pan.

Fill the pans with the required volume of oil. Refer to the safety note below regarding “solid” oil. Refer to the specifications at the end of these instructions, for the correct volume of oil for your particular model. Never allow oil to fall below the minimum oil level as operation of the unit in this manner could result in a fire.

Rotate the main switch to the “ON” position. The green pilot light will illuminate, indicating that the power is on. Rotate the thermostat knob to select the desired cooking temperature.

For cooking, a setting of between 170° and 180°C should suffice but experience will dictate the best temperature for the particular food being cooked.

When the temperature has been set the amber pilot light will illuminate, indicating that heating is taking place. When the oil has reached the set temperature the amber pilot light will go out. The thermostat will then continue to cycle on and off, maintaining the set temperature. The amber pilot light will also cycle on and off with the thermostat.

Solid Oil: If using “**solid**” type cooking oil, this **must** be melted very slowly by turning the thermostat on to the lowest setting for about 10 to 15 seconds, then off for a similar period. Repeat this process until the level of **liquid** oil reaches the minimum oil level mark. This is to prevent the possibility of the oil igniting.

Extra Virgin Olive Oil: The flash point of Extra Virgin Olive Oil is considerably lower than the more refined Olive oils and should not be used for high temperature frying.

WARNING: Always turn both the thermostat and main switch “OFF”, and allow element to cool before lifting the element out of the oil.

WARNING: Immersing a hot element in oil could cause a fire.

Cooking Tip: For frozen foods, direct from freezer to fryer, allow 5° higher temperature or slightly longer cooking time. Always shake the cold water and ice from frozen foods before frying. As a general rule, for larger items of food, cook at a lower temperature for a longer time. For smaller items of food, cook at a higher temperature for a shorter time.

WARNING: Ensure that oil is changed or filtered regularly. Old or dirty oil has a lower flash point and is more prone to surge boiling.

WARNING: always be careful when cooking frozen or over-wet food products as these items are more prone to surge-boiling (where the “froth” on top of the oil increases and can lead to an overflow of boiling oil and water) and are more likely to result in the “spitting” of hot oil. It is always safer to fryer smaller batches of product (never more than 0.5Kg) as this will reduce the surging effect.

To obtain the optimum results from your fryer we recommend the following guidelines.

- If a solid type cooking oil is used, melt it slowly at the minimum temperature setting.
- Keep salt away from the cooking oil.
- Check your oil to food ratio, 6:1 oil to food is recommended.
- Filter the cooking oil regularly.
- Top up the cooking oil regularly.
- Never use copper or brass utensils in the cooking oil.
- Keep the fryer covered when not in use.

SAFETY

GENERAL SAFETY

This machine contains no user-serviceable parts. Roband Australia, one of our agents, or a similarly qualified person(s) should carry out any and all repairs. Any repair person(s) should be instructed to read the Safety warnings within this manual before commencing work on these units.

Steel cutting processes such as those used in the construction of this machine result in sharp edges. Whilst any such edges are removed to the best of our ability it is always wise to take care when contacting any edge.

Particular care should be taken to avoid contact with any steel edge, and warnings should be given in regards to the danger of such contact to any repair or maintenance person(s) prior to commencement of any servicing.

Do not remove any cover panels that may be on the machine.

This unit can get very hot, ensure everyone is aware that the machine is operating and take care to avoid contact with hot surfaces (refer to installation for guide to ventilation).

Always ensure the power cable is not in contact with hot parts of the machine when in use, and ensure that if the cord is damaged in any way that is replaced immediately.

Electricity is dangerous, and should only be handled by qualified professionals. It's your life – Don't risk it.

SAFETY FEATURES

All fryers in this range are equipped with a thermal overload.

The thermal overload's function is to cut power to the fryer when the oil temperature reaches 238°C, thus preventing the oil reaching flash point temperature.

If the thermal overload trips it can be reset by pushing the button on the rear of the control box. If the thermal cutout continues to trip there may be a fault with the thermostat and you should contact your nearest authorised service agent for further help.

Models F25-UK are also fitted with a Tilt Switch designed to cut all power if the element is tilted out of the oil or if the element box is removed.

GENERAL FIRE SAFETY

Before using any fryer adequate safety measures should be in place. Such measures should include, but not be limited to, having an appropriate fire extinguisher or fire blanket located nearby in case cooking oil ignites.

CLEANING, CARE & MAINTENANCE

Attention to regular care and maintenance will ensure long and trouble free operation of your fryer.

- The Fryer should be cleaned out daily, or more often if necessary.
- Ensure the power is off and the fryer is cool before attempting to drain the cooking oil or clean any part of the machine.
- Wipe the fryer down with warm soapy water using a **damp** sponge or cloth. **Do not** immerse the control boxes in water.
- Filter the cooking oil daily if the fryer is constantly in use.
- Empty and wash the drip tray at the bottom the fryer regularly. The tray is removed by simply sliding it out.

H HAZARD

Although every care is taken during manufacture to remove all sharp edges, care should be taken when cleaning to avoid injury.

Caution: Some cleaning agents can damage stainless steel, usually through prolonged use. For this reason we recommend cleaning with soapy water. Any damage to the unit through the use of harsh or improper cleaning agents is entirely the fault of the user.

Warning: No parts of this these units, with the exceptions of the oil pan and drip tray, should ever be immersed in water for cleaning or any other purposes.

Note: We recommend that all electrical appliances be inspected annually with reference to applicable Australian or local Standards to ensure that compliance with changing Standards is maintained. Such inspections should be carried out by a suitable person conversant with the latest Standard updates.

TROUBLESHOOTING

If the fryer does not function check the following points before calling for service.

- ✓ The control boxes are plugged in correctly & the power switched on.
- ✓ The On/Off switch is On.
- ✓ The power points are not faulty.
- ✓ The temperature has been set correctly and the overloads have not tripped. To reset a tripped temperature overload switch, press the red button behind the control box as indicated in the picture below. Frequent tripping of the overload may indicate a problem.

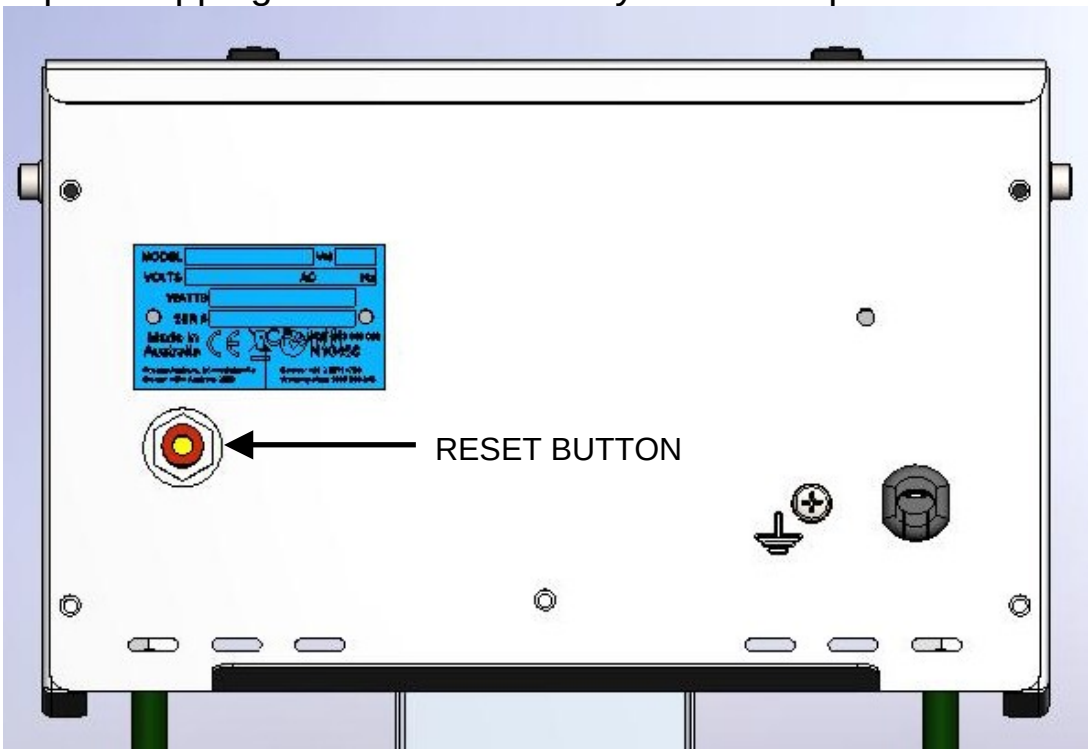

- ✓ The thermostat knobs are not loose or broken, rendering the thermostats inoperable.

CIRCUIT DIAGRAM*

Models F25, F25E, F28, F28E version 3-UK

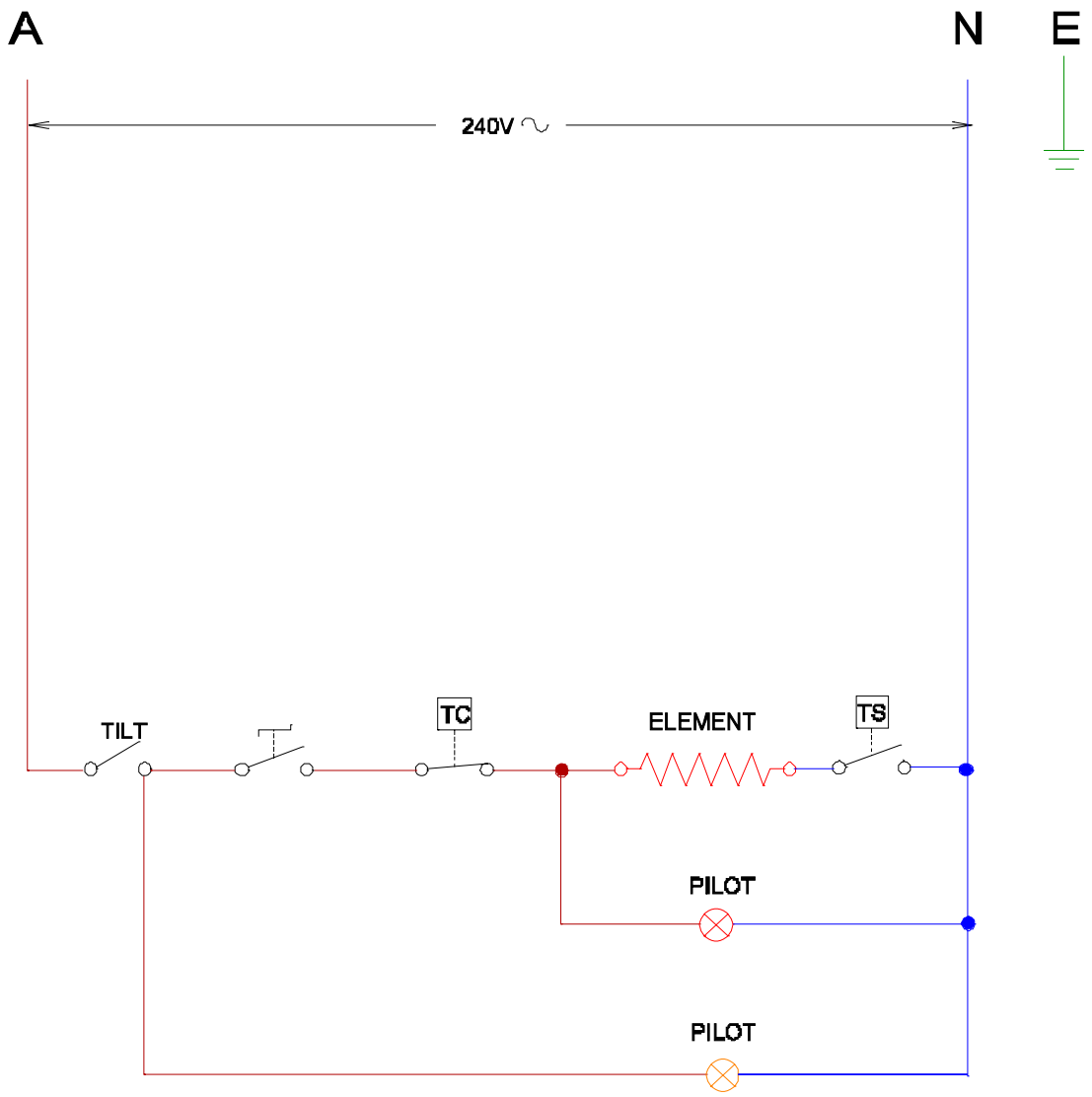

*Diagram is of a single control box. Each Double Pan Fryer contains two such control boxes. F25-UK includes an additional tilt switch in the active leg.

NOTE: Tilt switch for <u>UK Models ONLY</u>.
TC – Thermal cut-out
TS – Thermostat

***This circuit diagram has been provided for reference and to assist qualified service and repair agents only. Under no circumstances should a person not suitably qualified attempt repairs to any electrical equipment.**

SPECIFICATIONS

Model	Power Source	Power Consumption	Oil Volume	Nominal Dimensions		
				Width	Height	Depth
F28E	----------	2 x 3150 W	2 x 8 L	538mm	390mm	425mm
F28	---------- 220-240 Volts AC	2 x 3600 W	2 x 8 L	538mm	390mm	425mm
F25E	----------	2 x 3150 W	2 x 5 L	538mm	340mm	425mm
F25	---	2 x 2400 W	2 x 5 L	538mm	340mm	425mm
F25-UK		2 x 2735 - 3255 W	2 x 5 L	538mm	340mm	425mm

Constant Research & Development may necessitate machine changes at any time.

EXPLODED DIAGRAM

F25

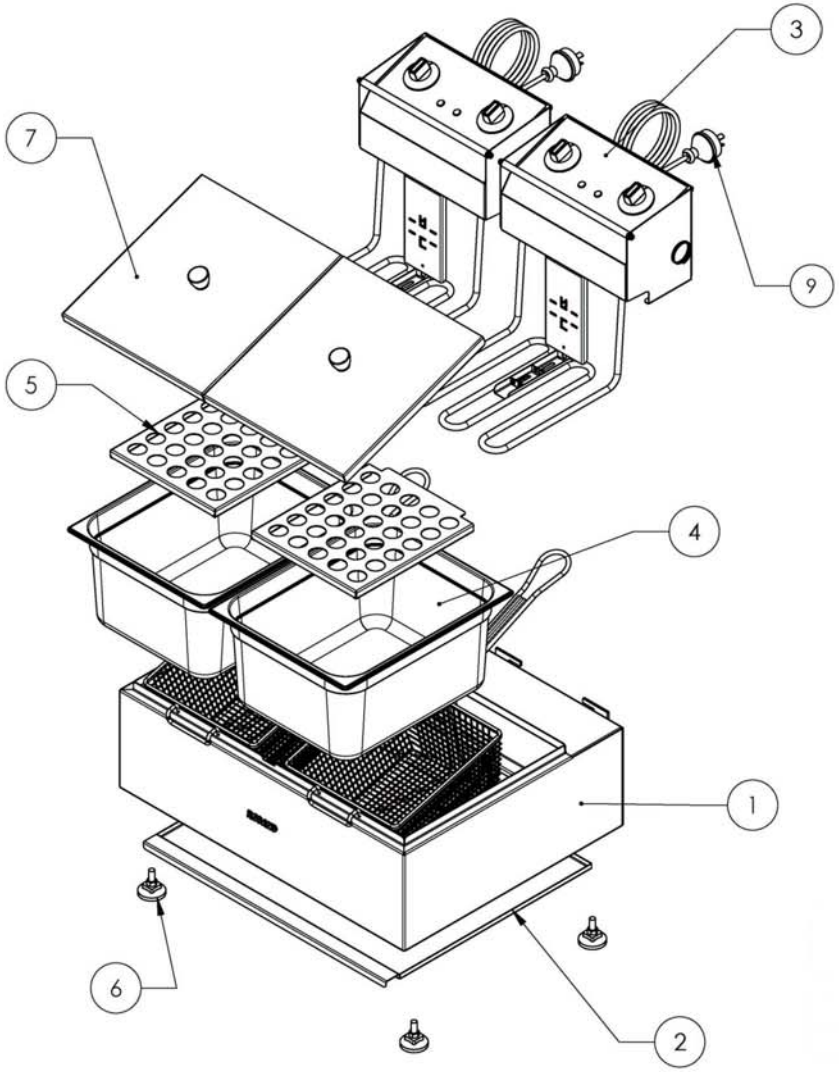

ITEM NO.	QTY.	PART NO.
1	1	SS0024 - Body Assembly
2	1	SS0446 - Drip Tray
3	2	VS0111 - Control Box Complete
4	2	Z12150
5	2	SS1205 - Element Guard - Slide On
6	4	PS0094 - Foot cw Nut Set
7	2	SS0018 - Lid with Knob & Screw
8	2	Roband
9	2	EC0239 - Plug and Cord - Black Elastomer 10amp

F28

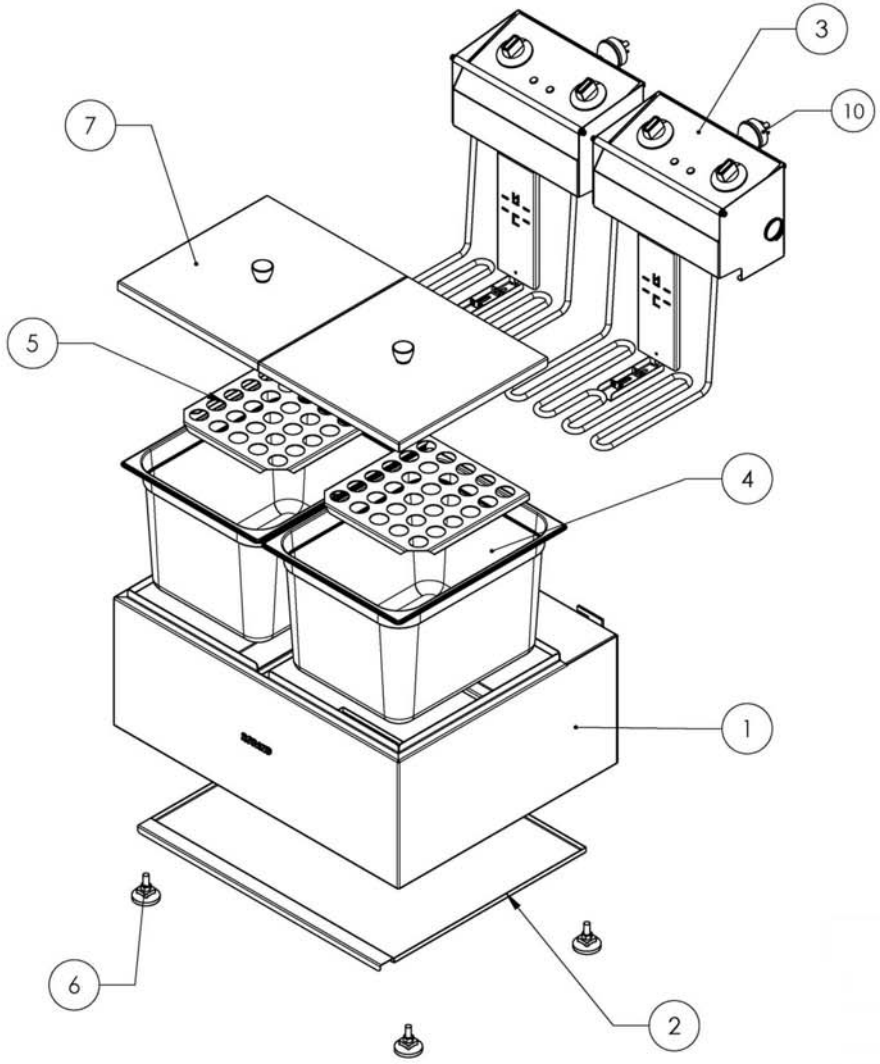

ITEM NO.	QTY.	PART NO.
1	1	SS0025 - Body Assembly
2	1	SS0446 - Drip Tray
3	2	VS0112 - Control Box Complete
4	2	Z12200
5	2	SS1189 - Element Guard - Slide On
6	4	PS0094 - Foot cw Nut Set
7	2	SS0018 - Lid with Knob & Screw
8	2	Roband
9	1	CC0069 - Top Insert
10	2	EC0306 - 15 Amp Black Thermoset Elastomer cord

NOTES

Record any preferred times or settings etc. here to act as a quick reference for other users.

TIPS FOR HEALTHY FRYING

Are you concerned about your customers' health? Would you like to improve the flavour and nutritional value of your fried product? And would you like to save money doing so? Then read on and take the first step towards a higher quality healthier product that actually can help save you money…

Saving Costs, Improving Oil Life and Increasing Efficiency

Food quality and operating efficiency is improved by cooking in regularly filtered oil. Long oil life can be achieved by frequently filtering the fat and oil inside the deep fryer. This allows the oil to work at greater efficiency for a longer time.

This improvement can be associated with increased efficiency; including power cost savings and a longer fry life for the fat or oil.

Several factors that shorten the fry life of the oil include the presence of water, emulsifiers, seasoning, light and detergent.

Various Types of Fats and Oils

Different types of oil or fat used to fry foods affect the overall nutritional quality of the finished product. Many of the various types of fats and oils available on the market are not suitable for cooking over long periods of time at high temperatures, as happens in deep-frying.

Tallow-based (Beef) Fats

The most commonly used fat due to its cheaper cost and relatively longer fry life. This oil is **not** recommended due to it's association with increased heart disease risk.

Liquid Vegetable Oils

Whilst most vegetable oils are recommended for cooking, many of them are not suitable for deep-frying. Higher temperatures break down the oil faster and by-products often have an off-flavour and that may also increase heart disease risk.

HARDENED/ CREAMED VEGETABLE OILS

These products may have a longer fry life than their liquid oil equivalents, but the hardening process increase heart disease due to the components added.

The Heart Foundation recommends frying oils that have a nutrient profile taking all these factors into account. These include:

1. Oils from specially bred seeds eg Sunola, Liquid Gold
2. Industry blends of fats and oils

TIPS ON DEEP FRYING CHIPS

1. Use thick, straight cut chips (greater than 13mm) or wedges

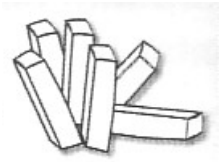

- Thin chips and crinkle chips absorb more oil and therefore use up more oil from the fryer
- If the chips are frozen, don't thaw. Water from thawed chips damages the oil

2. Cook at 180°C

- Food won't cook more quickly at temps above 180°C
- Higher temps damage the oil
- Damaged fat: - cooks more slowly
  - uses more electricity to cook the food
  - takes longer to get back up to temperature
- Lower temperatures produce greasy food
- Turn fryer to 140°C during quiet times to save power and save the oil

3. Cook chips in a separate fryer

- Fresh batter mix used for battered food, crumbs from crumb coatings, seasonings, sausages and seafood all damage the oil.
- If you have enough fryers, keep one fryer for chips only, this oil will last longer

4. Cook chips for 4 - 5 minutes

5. Avoid big drops in oil/fat temperature

- Big drops in temperature will damage the oil more quickly.
- Put small loads in the baskets
- If you have enough fryers, put baskets in alternate fryers.
- Keep fryers topped up with fresh oil. Don't top up whilst cooking food.

6. Drain chips well

- Vigorously shake the basket of cooked food twice and hang it for at least 20 seconds over the hot fryer. This returns some oil/ to the fryer

7. Look for signs of oil degradation

- If the oil is damaged (eg dark colour, smoking) discard it all.

8. Filter oil daily

- Use a funnel or a filtering machine
- The cost of a filtering machine will be offset by your savings on the oil
- Filtering extends the useful life of the oil
- Skim the surface of the oil frequently while cooking

9. Clean fryer frequently

- Detergent damages the oil. If you use detergent, rinse well after with a solution of white vinegar and water (1 cup of vinegar in a 20 litre bucket of water.) Finally rinse with water.
- Occasionally it may be necessary to fill the fryer with water and boil 15-30 minutes to help loosen any gum formed on the fryer.

10. Cover the fryer

- As light, dust and air damage oil, cover the fryer overnight and other times during the day when oil is cool.

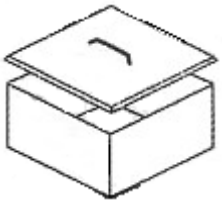

APPENDIX A

Residual Current Devices (RCD's)

Also known as Earth Leakage Protection systems an RCD is a protective device that automatically disconnects the live conductors of a circuit when an earth leakage current reaches a predetermined value.

Australian and International Standards detail when and where RCD's are to be used in electrical installations, but common practice in many countries is to use a 30mA RCD in general commercial applications. This is typically done because 30mA RCD's are readily available and are used in domestic installations.

For Commercial installations, and for socket-outlets providing power to commercial heating equipment (Toasters, Bains Marie, Grillers), 30mA RCD's are typically unsuitable unless they are protecting only one device. Higher rated RCD's should be considered if protecting multiple socket-outlets, giving appropriate consideration to the type of equipment being protected.

AS/NZS3000 2.5.2 gives the following warnings that should have been taken into consideration when an RCD circuit was installed.

> *To avoid unwanted tripping due to leakage currents and transient disturbances, care should be taken to ensure that the sum of the leakage currents of electrical equipment on the load side of an RCD is less than 1/3 of its rated residual current.*
>
> *To Avoid excessive leakage current causing unwanted tripping where socket-outlets are protected by one RCD having a rated residual current not greater than 30mA, consideration should be given to the number of socket-outlets protected and the nature of electrical equipment likely to be connected to the socket-outlets.*

Tubular elements (such as those used in this unit) reaching temperatures greater than 110°C are subject to moisture absorption and therefore earth leakage current generation. Should the installation and use of this unit trip an RCD the unit will need to be run on a circuit without an RCD for approximately 30-60 minutes, after which time the elements should have dried out and the machine should function normally. If you are unable to locate a circuit without an RCD please contact your supplier or contact Roband or our Agent for alternative suggestions.

EC DECLARATION OF CONFORMITY

Manufacturer	Roband Australia 11 Inman Rd Cromer NSW, 2099 Australia
Model Type	Fryers
Description	High Performance Fryer-Twin Pan
Date of first CE Marking	1st March 2008
Specific Models	F25, F25-UK

Standards:

This machine is designed in compliance with

- Machinery Directive 2006/42/EC
- Low Voltage Directive 2006/95/EC
- EMC Directive 89/336/EEC including amendments to 93/68/EEC
- WEEE Directive 2002/96/EC (WEEE)
- Restriction of Hazardous Substances in Electrical and Electronic Equipment 2002/95/EC (RoHS)
- EN60335.1 Household and similar Electrical Appliances
- EN60335-2-37 Commercial Electric Deep Fat Fryers
- EN55014.2: 1997 Electromagnetic compatibility. Requirements for household appliances, electric tools and similar apparatus. Immunity.

Environmental:

This product is designed in order to contribute as little as possible to the quantity and noxious nature of waste and risk of pollution or other environmental contamination.

Packaging materials used in this machine are designed to be recyclable.

Declaration:

I hereby declare under our sole responsibility that the product mentioned above to which this declaration relates complies with the above-mentioned standard(s).

Roband Australia has appointed Valera Ltd as our EU Authorised Representative of :

5-7 The Glade Business Centre, Eastern Ave, West Thurrock, Essex, RM203FH , UK.
Tel: 08 45 270 4321 Fax: 0845 270 4323 E-Mail : info@valera.co.uk

Signature of Authorised Person:_____ Date: 14th March 2008
Print Name: Gordon Thorpe Position: Director of Engineering

Warranty

Every care is taken to ensure that no defective equipment leaves our factory and all goods manufactured by us are guaranteed against faulty workmanship and materials for a period of 12 months from the date of purchase. Glass and lamps are **not** included in this warranty. Generally, all goods claimed under this warranty must be returned to the factory or an authorised service agent, freight prepaid, for inspection. Any part deemed to be defective will be replaced, however, no claims will be entertained for parts damaged in transport, misused or modified in any way without our approval. For machines that are not considered to be portable (e.g. food bars, rotisseries, large hotplates and some bain maries), on site warranty service will be provided in capital city metropolitan areas only. In all other locations, the customer is responsible for all travelling time/service call costs and payment for this will be required prior to the commencement of the repair. The labour costs to actually repair the fault will be met by this company.

This company reserves the right to reject a claim for warranty if it is not completely satisfied with the circumstances under which it occurred and any costs incurred for false claims or faults due to incorrect usage etc. are the responsibility of the claimant. Under no circumstances shall Roband Australia Pty Ltd or any subsidiary company or Agent be liable for loss of profit or damage to other equipment and property.

Generally, authorised service agents are located in all areas which have authorised distribution dealers. For the name of your nearest Australian authorised service agent please contact:

ROBAND AUSTRALIA PTY LTD
Warranty Number: 1800 268 848
Phone: (02) 9971 1788 Fax: (02) 9971 1336

All other countries please contact your selling agent.

Please complete the following details and keep this card in a safe place.

NAME: _____

ADDRESS: _____

MODEL No.: _____ SERIAL No.: _____ DATE PURCHASED: _____

NAME OF DEALER: _____

PLEASE RETAIN THIS SECTION FOR YOUR RECORDS

DO NOT POST

ROBAND AUSTRALIA PTY LTD

ALSO AVAILABLE FROM YOUR ROBAND DISTRIBUTOR

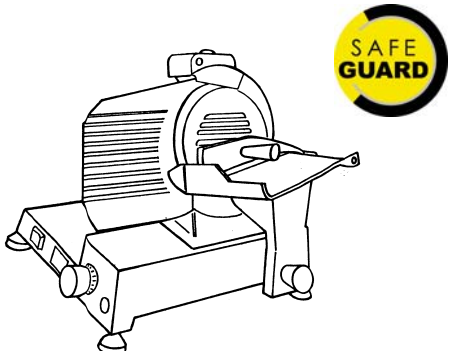

NOAW Slicers

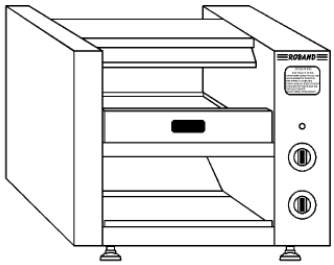

Conveyor Toasters

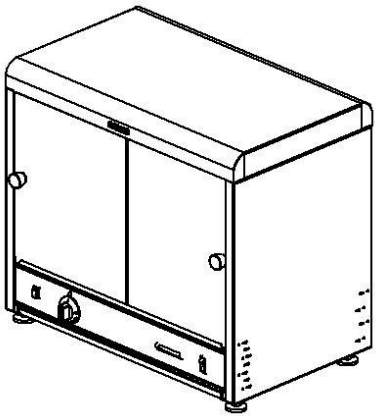

π-Plus
Pie & Food Warmers

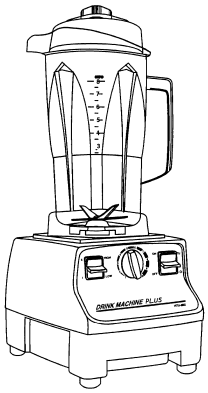

Worlds #1
Blender

Vitamix
Bar Blenders

Manufactured in Australia by
ROBAND AUSTRALIA PTY LTD

Authorised Distributor/Agent