Proudly Distributed By

ROBAND AUSTRALIA PTY LTD

OPERATING INSTRUCTIONS

DIPO INDUCTION COOKERS AND WARMERS

Models **DC23, DCP23, DWR04** **Version 1**

Includes

International models: **…-UK and …-F**

Special Features:

- High Performance Induction Technology
- Pan Tracing Technology
- High Reliability Electronics
- Aerogel Insulation (selected model)

CE

These instructions cover the models of **Dipo** Induction Cookers and Warmers only. Although there are slight variances between models, the installation, operation, care and maintenance procedure is the same for all.

4/11/2013

Roband® Australia is a wholly Australian owned company and has been manufacturing quality commercial catering equipment for the food service industry for more than 50 years. Roband products are engineered and manufactured to the highest standards to provide functionality, reliability and durability, and our quality products are exported world-wide.

Included in the comprehensive Roband® range are Toasters, Fryers, Milkshake Mixers, Rotisseries, Food Display Cabinets and much more.

Roband® Australia also acts as the Australian agents for Vitamix® Blenders, Noaw® Meat Slicers, Ryno® Stainless Benching, Ceado Juicers, Förje® Cookware, Robalec™ Soup/Rice Warmers, Robatherm Urns, Austheat® Fryers, Dipo Induction & Autofry Machines. Roband also has its own line of commercial cookware and cutlery under the Robinox® brand name.

For a complete set of brochures please contact your nearest authorised dealer or contact Roband directly at our head office.

Roband Head Office Sydney, Australia		
Roband Australia Pty Ltd	**Tel:**	+61 2 9971 1788
1 Inman Road	**Fax:**	+61 2 9971 1336
Dee Why NSW 2099	**Email:**	sales@roband.com.au
AUSTRALIA	**Web:**	www.roband.com.au

International Agents

For additional agents please email Head Office

Cyprus:	United Catering Equipment Supplies Ph: +357 777 777 24	**Singapore:**	Jelco Private Ltd Ph: +655 611 988
Fiji:	Hotel Equipment Ltd Ph: +679 672 0666	**Switzer-land:**	Burgi Infra Grill Ph: +41 418 554 552
Hong Kong:	Chung Wah Kitchen Machine Ltd Ph: +852 2334 5411	**Thailand:**	Seven Five Distributors Co Ltd Ph: +662 866 5858
Malaysia:	Allied Food Equipment Ph: +603 9133 5833	**United Arab Emirates:**	Boncafe Middle East LLC +9714 282 8742
Maldives:	Radiant Heat Maldives Pty Ltd Ph: +960 333 4845	**United Arab Emirates:**	Nisa Trading LLC +9714 396 6132
New Zealand:	Roband New Zealand Ph: +649 274 1354	**United Kingdom:**	Metcalfe Catering Equipment Ph +44 1766 830 456
Noumea:	Comptoir Materiel Professionnel Ph: +687 28 50 43	**USA:**	Condon & Fisher International Ph: +1 508 361 9226
Noumea:	CHR Import Ph: +687 92 83 79		
Papua New Guinea:	Brian Bell & Company Pty Ltd Ph: +675 325 5411		

© Copyright 2013 – Roband® Australia Pty Ltd

All rights reserved. No part of this work may be reproduced or copied in any form or by any means, electronic or mechanical, including photocopying or posting to a website, without the written permission of the publisher. The material contained within this document is intended entirely for instructional purposes.

CONTENTS

INTRODUCTION 1
PACKAGING 1
COMPLIANCE 1
GENERAL PRECAUTIONS 2
OVERVIEW OF INDUCTION 4
INSTALLATION 4
INSTALLATION continued… 5
OPERATION 6
SUITABLE POTS FOR INDUCTION COOKING 8
CLEANING, CARE & MAINTENANCE 9
TROUBLESHOOTING 10
SPECIFICATIONS 11
CIRCUIT DIAGRAM 12
CIRCUIT DIAGRAM 13
EC DECLARATION OF CONFORMITY 14
NOTES 15
WARRANTY 16

INTRODUCTION

Congratulations on your purchase of this quality **Dipo** product. With proper care and management your new purchase will give you years of trouble free service.

By reading these instructions carefully you can ensure that this machine is used and maintained properly, helping your new investment to perform well for you now, and to continue performing in the many years to come.

PACKAGING

All care is taken when packing and Roband ensures that every unit is functional and undamaged at the time of packaging.

The Package of these products should include:

1) One Dipo Induction unit (appropriate model)
2) Temperature probe (DCP23 ONLY)
3) This manual
4) Foam Packing

Any damage to the machine as a result of freight must be reported to the Freight Company and to the agent responsible for the dispatch of said unit within 24 hours of receipt. No claims will be accepted or entertained after this period.

CE COMPLIANCE

C-Tick:
Dipo products have been designed and manufactured to comply with any and all specifications set out by the Australian Communications Authority (ACA) in regards to Electromagnetic Compatibility. As testament to such compliance these units bear the C-Tick symbol.

For further information contact the Australian Communications Authority, PO Box 13112, Law Courts, Melbourne VIC 8010.

CE products bearing the CE compliance mark have been designed and manufactured to comply with European Standards and Directives. A copy of the CE Declaration of Conformity is located at the back of these instructions.

SAFETY

GENERAL PRECAUTIONS

- This machine must only be operated by qualified person(s) who are fully versed in the operating and safety instructions described in this manual.
- Operators should be instructed to familiarise themselves with any and all safety instructions described in this manual prior to commencement of any operation, maintenance or service.
- This appliance is not intended for use by persons (including children) with reduced physical, sensory or mental capabilities, or lack of experience and knowledge, unless they have been given supervision or instruction concerning use of the appliance by a person responsible for their safety.
- Children should be supervised to ensure that they do not play with the appliance.
- The machine should be disconnected from all power and allowed to cool to room temperature before handling, cleaning or service.
- This machine contains no user-serviceable parts. Roband Australia, one of our agents, or a similarly qualified person(s) should carry out any and all repairs. Any repair person(s) should be instructed to read the Safety warnings within this manual before commencing work on these units.
- If the supply cord is damaged, it must be replaced by the manufacturer, its service agent or similarly qualified persons in order to avoid a hazard.
- Do not remove any cover panels that may be on the machine, unless being repaired by authorized repairer. Sharp edges may exist inside the machine; repairers should take care when servicing the machine.
- Do not use for any applications outside the scope of these instructions
- Do NOT block the Air-Intake Panel as this may cause the unit to overheat.
- Do NOT insert any objects or tools into the air intake openings. Doing so may cause electric shock.
- These machines are heating units, and as with any commercial heating unit the surfaces on these cookers will get hot. Do NOT touch the surface of the ceramic plate as it may be hot from heat generated during cooking.
- Do Not heat empty pots or pans! Heating an empty pot or pan may cause the unit to overheat and enter “overtemp protection” mode where the unit will shut off. Empty pans will become extremely hot very quickly and could cause serious injury.
- Always be careful when near an operating Dipo Induction unit, and ensure that any risk to unwary customers or staff is minimised with additional signage if necessary.

- These machines should not be cleaned with the use of a spray applicator, water jet or any other method except those outlined in the Cleaning & Care section of these instructions.
- Do not immerse the unit, plug or cord in water or other liquid.
- Hot surfaces should be left well ventilated with an air gap of at least 100mm, though common sense should be used if the machine is near heat-sensitive materials.
- Always ensure the power cable is not in contact with hot parts of the machine when in use. Ensure that any damaged power cord is replaced before further use.
- Do NOT attempt to move the induction cooker while in use or while it is Hot.
- Do NOT heat any sealed cans on the induction cooker as they may explode
- Do NOT place any other objects on top of the cooker other than those used for cooking
- Do NOT use if you have a Pacemaker.
- Do NOT operate the cooker if it has been damaged in any way, or if the unit malfunctions. Return the unit to the nearest authorized service centre for examination or repair.

Roband will accept no liability if;

- Non-authorised personnel have tampered with the machine.
- The instructions in this manual have not been followed correctly.
- Non-original spare parts are used.
- The machine is not cleaned correctly, with the right product.
- There is any damage to the unit.

OVERVIEW OF INDUCTION

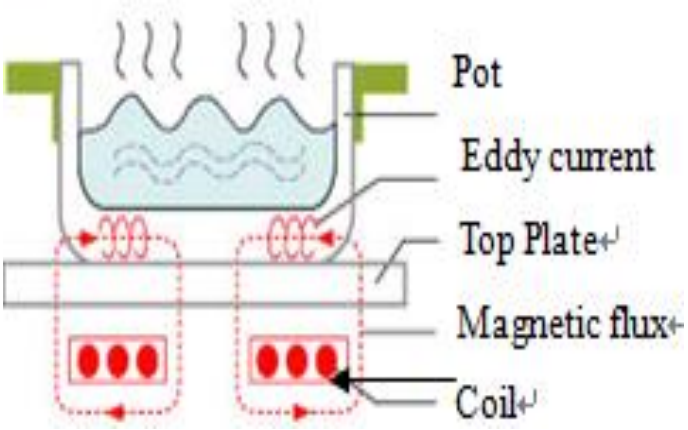

When the magnetic flux created at the coil passes through the metal pan placed on the top plate, eddy current are generated.

These eddy currents are then transformed into heat as they flow backwards and forwards through the cooking pan.

INSTALLATION

- Remove all the packaging materials and tape, as well as any protective plastic from the machine. Clean off any glue residue left over from the protective plastic using methylated spirit.
- Place the Dipo Induction unit on a firm, level surface in the required position. Ensure it is positioned at least 100mm away from the wall and other objects.
- Connect the Induction Cooker to standard, single phase, 10 Amp power point. We recommend that the electrical circuit supplying the power point be protected by an approved RCD earth leakage device. Ensure no water has splashed on the plug.
- National Standards exist outlining the positioning, spacing and ventilation requirements when installing new appliances. These Standards should be consulted and new equipment should be installed accordingly. In any situation where specifications allow a distance of less than 100mm we would still *recommend* that a well-ventilated air gap of not less than 100mm be maintained. If the machine is near particularly heat-sensitive materials common sense should be employed in determining sufficient clearance.
- Do NOT place the induction cooker in, on or near open flames, flammable liquids or high temperature surroundings
- Place additional signage and/or protection around the machine if a Hazard Assessment for the installation requires.
- Do not attach any other items to this machine, or use contrary to what is described in this manual.
- The use of any accessories not recommended by the manufacturer may cause injuries.

INSTALLATION CONTINUED…

- Do not place the Dipo Induction unit above or near other equipment that may give off heat.

DWR04 – Drop in Model

1. Cut an opening as shown in Figure 1.
2. For fan ventilation, 100mm clearance is required to all sides of the appliance

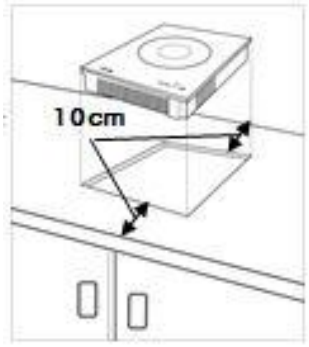

Figure 1

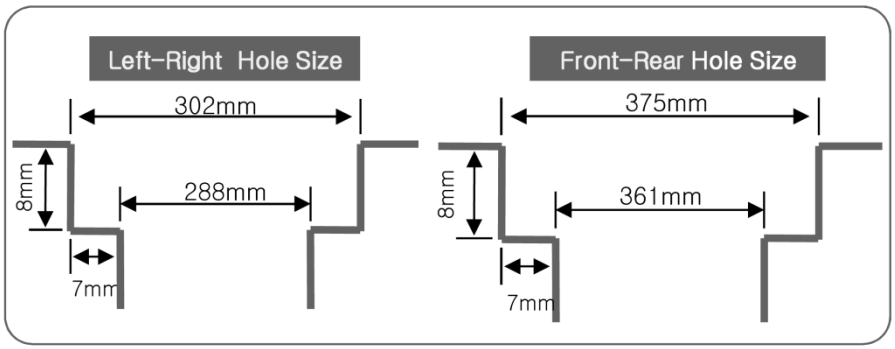

Figure 2

OPERATION

DC23

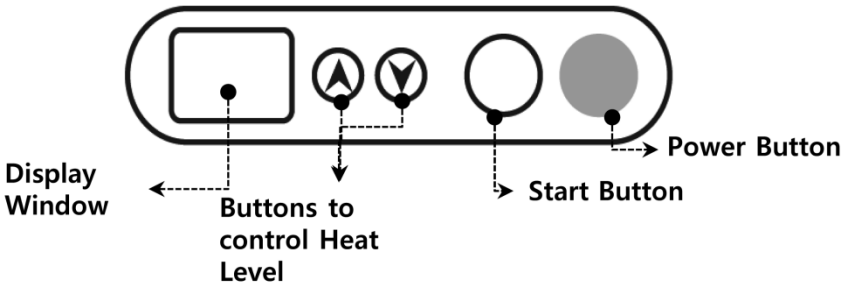

DCP23

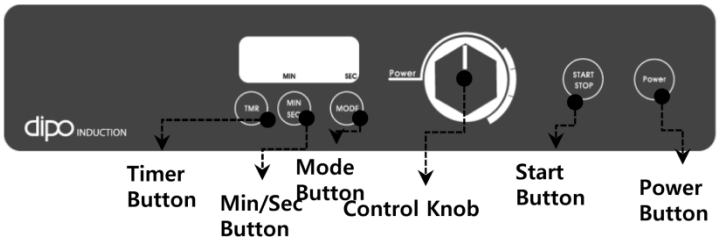

DWR04

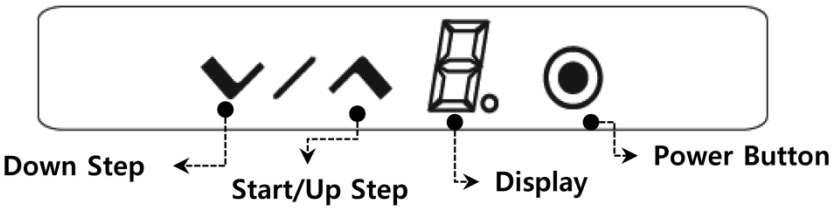

1. **Turning On -** To turn on the unit, plug the power cord into a 10A receptacle and press the power button.
2. **Place an appropriate vessel on the Ceramic Top Plate**
   - Must be placed in the center of the “target” on the Ceramic Top Plate
3. **Start Operation** - Press the start button to begin cooking. Using the up/down buttons or control knob select desired Cooking/Warming level 1-10. The higher the number, the higher the heat applied.
4. **Switching Off** – Press the Power button to turn the unit off and reset.
   - Maximum run time is 12hours. After 12hours the machine will automatically switch off. Press “Start” to continue cook/warm cycle.

<u>Timer Function only available on DCP23</u>

5. **Using Timer Function** – To activate Timer Function;
   - Press power button to turn machine on
   - Press Timer Button. At first, “720” will be displayed

- Press the “Min/Sec” button. “720” will blink. By turning the “Control Knob” the desired cooking time can be selected. (From 1sec, to 720min).
- To adjust in 1 second increments, press the Min/sec button once more and Seconds will blink. Use the knob to select the desired time.
- To begin timer cycle press Start Button.
- To control heat levels during timer cycle, press the timer button again then use the control knob to select the desired heat setting.
- At the end of the timer cycle the operation will stop. To restart timer sequence, press “Start” button again. The same power setting will be used as previous cycle.
- To change power levels, press the “Power Button”

Temperature Mode only available on DCP23

6. Temperature Mode
   - Press power button to turn machine on
   - Next press the “Mode” button. “000C” is displayed
   - Press the “Start” button. The display will show 40°C.
   - Set the desired cooking temperature by turning the “Control Knob”
   - The display will alternate between showing “Actual Temperature” and “Set Point Temperature”
   - When the “Set Point Temperature” has been reached, the display will stop alternating.

   If the Temperature sensor is not connected and the “Mode” button is pressed, the display will show error “E5”

Warning: Roband is not responsible for any damage to the equipment or injuries caused by misuse or negligence.

SUITABLE POTS FOR INDUCTION COOKING

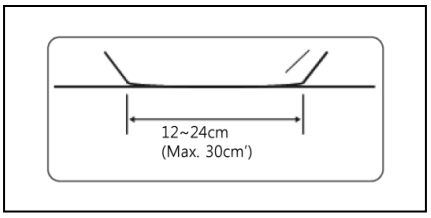

- **Base of Pot/Pan -** Pot/Pan Must Have Flat Bottom with no raised edges or deformities in the base
- **Size of Pot/Pan** – Diameter of pot/pan must be no less than 12cm and no larger than 30cm (max Ø24cm for DWR04)
- **Pan Material** – The base of pots/pans must be: Iron, Cast Iron, Enamelled Iron, Stainless Steel (Magnetic), Triple Bond Steel, and magnetic pots.

NOTE*: Only use pots that have Induction Cooker Markings*

- **Pans that Wont' work with Induction Cooker/Warmer;** Non-Ferrous Metal, Glass, Aluminium, Copper, Mesh for Grill, Concave Bottom Pans.

CLEANING, CARE & MAINTENANCE

Attention to regular care and maintenance will ensure long and trouble free operation of your Dipo. Although scheduled servicing is not required we do recommend you adopt a program of regular maintenance to ensure that the Dipo cooker is clean and functional and to avoid inadvertently damaging the unit.

Daily cleaning should be considered mandatory for all cooking equipment. In order to ensure the cooking plates are cleaned properly and to avoid damage the instructions below should be followed.

- **Allow Machine to cool to room temperature before cleaning.**
- Disconnect from power.
- Plate should be cleaned at the end of each day using a soft cloth dampened with only hot soapy water, with the machine turned OFF. **Do not under any circumstances use abrasive cleaning compounds or caustic cleaning agents.**
- **NEVER** put cold water or ice on hot plates at a medium to high temperature. This may cause the plates to crack due to the sudden change in temperature.
- **Do not use hard or sharp tools to clean the surface**.
- The stainless steel case can be cleaned using a damp cloth. A commercial Stainless Steel cleaner can be used where necessary.
- **If** the product has a removable air filter, this must be cleaned no less than once per week. It may be necessary to do this more frequently as necessary.
    - Filter is located underneath the unit. Slide it out to the front, clean with water and a mild detergent and allow to air dry before re-installing.
    - **ENSURE THAT AIR FILTER IS REPLACED BEFORE USE!**

MAINTAINING APPEARANCE OF THE STAINLESS

- For protection and cleaning of “brushed” stainless steel surfaces, it is best to use a cleaner that will both remove grease and dirt while protecting the surface from future marks. Whilst there are many possible products on the market, our tests have shown that the following products work well on brushed stainless surfaces.
    - Stainless Steel Polish (Water based) - Supplied by Clean Plus Detergents Pty Ltd
    - Simple Green Pro M cleaner – Supplied by Simple Green

TROUBLESHOOTING

Symptoms		Action
Display is Blank		Check that the unit is plugged in Check voltage at the power outlet
Power on, but Pan not heating		Check that the pan is suitable for induction cooking Check pan is positioned in the center of the top plate
Unit stops heating or output is lower than usual		Check products ventilation Check that the unit has not overheated and entered “Overtemp” mode. Check by measuring the temperature of the ceramic surface to see if it is abnormally hot. If so, switch off, check vents and contents of pot, then allow to cool before using again Check the timer set value Check if the 12 hour run time has been exceeded and press start again
Error Display Codes	U, 00	Make sure the Pan is a valid for Induction cooking Check that the pan has a flat bottom
	E4, E6	Turn off and unplug the unit, allow to cool, then plug back in and trying again
	E5	Check that the temperature sensor is connected to the product correctly “E5” means that the sensor is not connected
	E2, E3, E7	Turn off and unplug the unit, wait 1 minute, then plug back in and trying again
	E1, E8, E9	Contact service agent

SPECIFICATIONS

Model	DC23	DCP23	DWR04
Power Source	230 Volts AC	230 Volts AC	230 Volts AC
Power Frequency	50-60Hz	50-60Hz	50-60Hz
Power Consumption	2300 Watts	2300 Watts	400 Watts
Amps	10.0	10.0	1.8
Width mm	365	365	297
Height mm	115	115	80
Depth mm	450	455	370
Weight kg	7	7	5

Constant research and development may necessitate specification changes at any time.

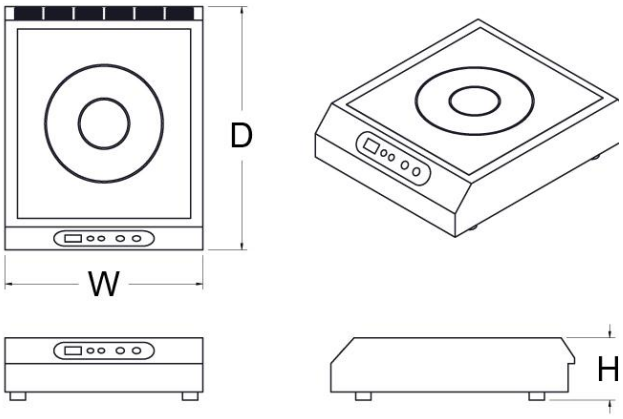

DC23

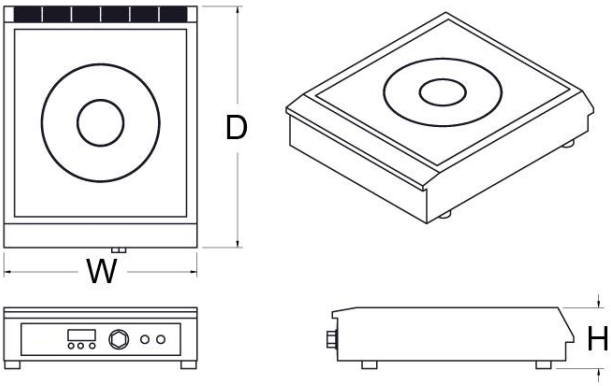

DCP23

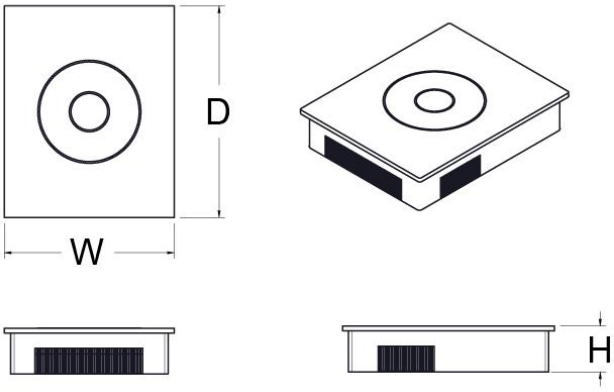

DWR04

CIRCUIT DIAGRAM

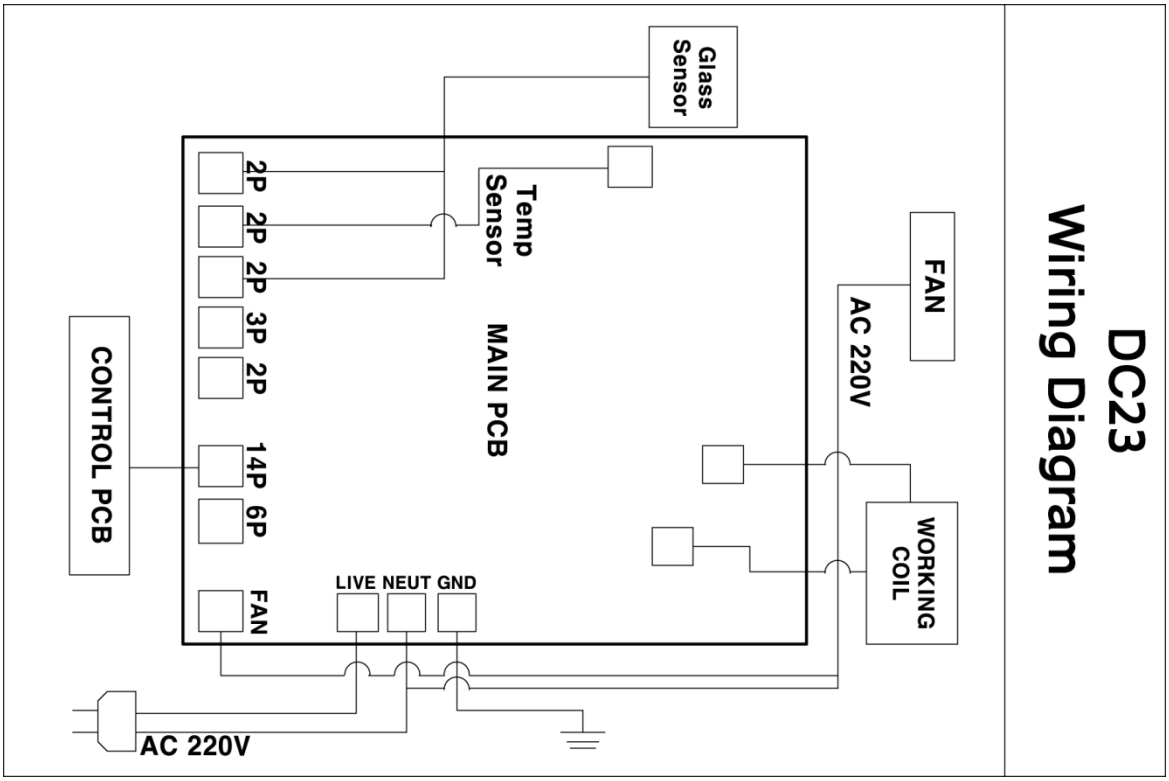

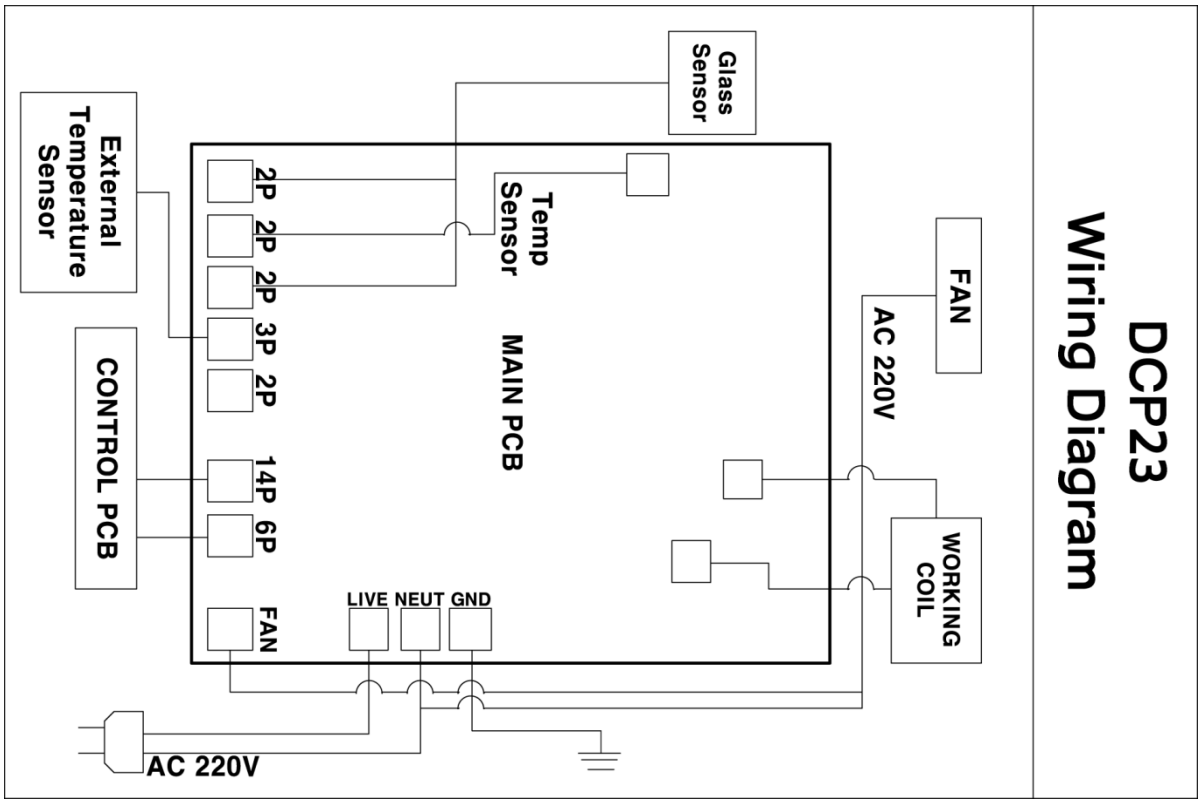

NOTE: This circuit diagram has been provided for reference and to assist qualified service and repair agents only. Under no circumstances should persons not suitably qualified attempt repairs to any electrical equipment.

CIRCUIT DIAGRAM

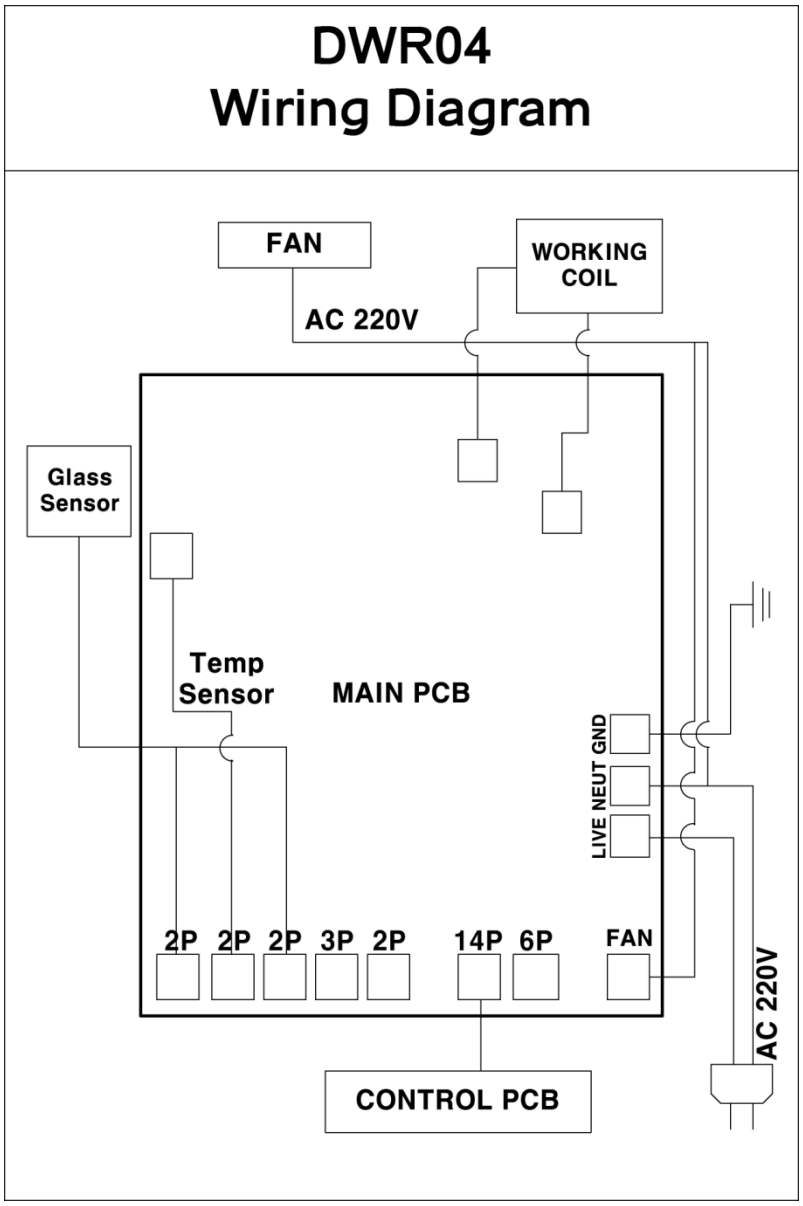

NOTE: This circuit diagram has been provided for reference and to assist qualified service and repair agents only. Under no circumstances should persons not suitably qualified attempt repairs to any electrical equipment.

ROBAND AUSTRALIA PTY LTD

EC DECLARATION OF CONFORMITY

Manufacturer	Roband Australia 1 Inman Rd Cromer NSW, 2099 Australia
Model Type	Dipo Induction Cooker & Warmer
Description	Induction Cooker and Warmer
Date of first CE Marking	1st June 2013
Specific Models	DC23, DCP23, DWR04

STANDARDS:

This machine is designed in compliance with

- Machinery Directive 2006/42/EC
- Low Voltage Directive 2006/95/EC
- EMC Directive 89/336/EEC including amendments to 93/68/EEC
- WEEE Directive 2002/96/EC (WEEE)
- Restriction of Hazardous Substances in Electrical and Electronic Equipment 2002/95/EC (RoHS)
- EN60335.1 Household and similar Electrical Appliances
- EN60335-2-48 Commercial Electric Toasters and Grillers
- EN55014.2: 1997 Electromagnetic compatibility. Requirements for household appliances, electric tools and similar apparatus. Immunity.

ENVIRONMENTAL:

This product is designed in order to contribute as little as possible to the quantity and noxious nature of waste and risk of pollution or other environmental contamination.

Packaging materials used in this machine are designed to be recyclable.

DECLARATION

I hereby declare under our sole responsibility that the product mentioned above to which this declaration relates complies with the above-mentioned standard(s).

Roband Australia has appointed Valera Ltd as our EU Authorised Representative of :
5-7 The Glade Business Centre, Eastern Ave, West Thurrock, Essex, RM203FH , UK.
Tel: 08 45 270 4321 Fax: 0845 270 4323 E-Mail : info@valera.co.uk

Signature of Authorised Person:_____ Date: 1st June 2013

Print Name: Mal Johnston Position: Director of Engineering

NOTES

WARRANTY

Every care is taken to ensure that no defective equipment leaves our factory and all goods manufactured by us are guaranteed against faulty workmanship and materials for a period of 12 months from the date of purchase. Glass, lamps and Teflon coatings are **NOT** included in this warranty. Generally, all goods claimed under this warranty must be returned to the factory or an authorised service agent, freight prepaid, for inspection. Any part deemed to be defective will be replaced, however, no claims will be entertained for parts damaged in transport, misused or modified in any way without our approval. For machines that are not considered to be portable (e.g. food bars, rotisseries, large hotplates and some bain maries), on site warranty service will be provided in capital city metropolitan areas only. In all other locations, the customer is responsible for all travelling time/service call costs and payment for this will be required prior to the commencement of the repair. The labour costs to actually repair the fault will be met by this company.

This company reserves the right to reject a claim for warranty if it is not completely satisfied with the circumstances under which it occurred and any costs incurred for false claims or faults due to incorrect usage etc. are the responsibility of the claimant. Under no circumstances shall Roband® Australia Pty Ltd or any subsidiary company or Agent be liable for loss of profit or damage to other equipment and property.

Generally, authorised service agents are located in all areas, which have authorised distribution dealers. For the name of your nearest Australian authorised service agent please contact:

ROBAND® AUSTRALIA PTY LTD

Warranty Number: 1800 268 848 (for Australian Residents)

Phone: +61 2 9971 1788 Fax: +61 2 9971 1336

Email: Warranty@roband.com.au

All other countries please contact your selling agent.

Please complete the following details and keep this card in a safe place.

NAME_____

ADDRESS_____

MODEL No:_____SERIAL No: _____DATE PURCHASE_____

NAME OF DEALER:_____

PLEASE RETAIN THIS SECTION FOR YOUR RECORDS

DO NOT POST

ROBAND® AUSTRALIA PTY LTD

OTHER LEADING PRODUCTS AVAILABLE:

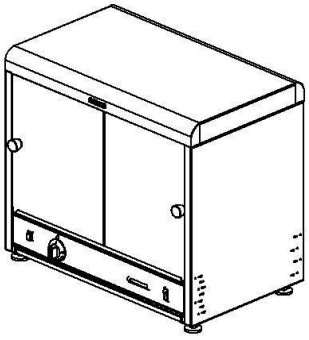

π-PLUS
PIE & FOOD WARMERS

DRINK MIXERS

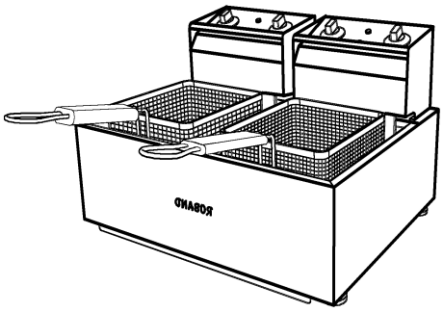

HIGH PERFORMANCE DEEP FRYERS

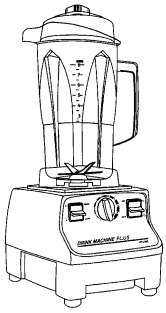

VITAMIX BLENDERS

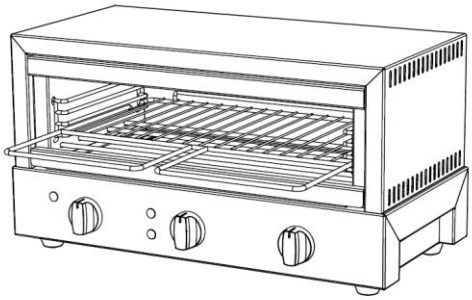

GRILLMAX TOASTERS

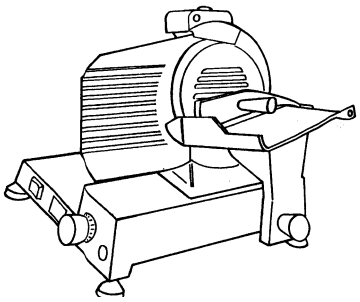

NOAW Slicers

Manufactured/Imported in Australia by:

ROBAND AUSTRALIA PTY LTD

Authorised Distributor/Agent