www.santos.fr

SANTOS®

Ideal appliance to make fresh fruit juices (lemons, oranges, and grapefruits)

Designed for all those in the trade offering on their menus fresh fruit juices, cocktails or smoothies...

Lever Juicer Evolution 70

CE RoHS COMPLIANT 2002/95/EC NSF

Internationally patented models

Lever Juicer -

Since 1954

The new lever juicer – evolution 70 is the result of 50 years worldwide experience on the fruit market.

Useful (removable squeezer and bowl), **high performance** (maximum juice extraction with the new helical squeezer) and **reliable**, this appliance allows you to make citrus juicer either in a glass or in a carafe.

High output: just cut your citrus half and press. You will extract easily from 20 to 50 litres per hour (5 to 10 gallons)

For use everywhere you need a fresh squeezed citrus juice: juices bars, health food stores, hotels, bars, restaurants, cafeterias, ice cream shops, institutions, hospitals...

Evolution 70

Performance – Easy to use

New squeezer

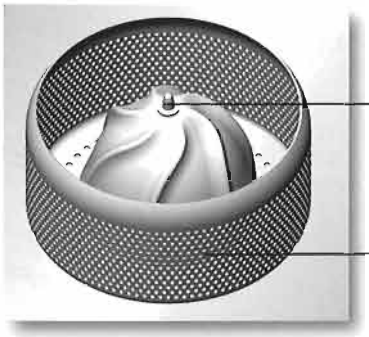

Special tip to squeeze all types of citrus: lemon, orange or grapefruit

Removable stainless steel perforated strainer with centrifugal action. It gives the right yield and pulpy juice.

Easier and less cleanings (centrifugal action)

Easy to use and clean:
removable stainless steel bowl, cone and cup

Technical data

- **Motor**

Single phase:	100-120 V - 50/60 Hz (350W) - **NSF** 220-240 V - 50/60 Hz (275W)
Speed:	1500 Rpm/min (50 Hz) 1700 Rpm/min (60 Hz)

- **Weight :**

Net : 13.5 Kg
Packed : 14.5 Kg

Appliance:

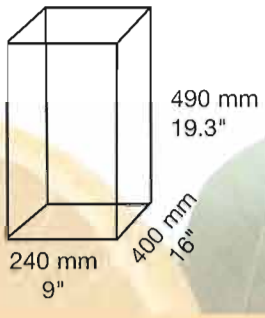

Shipping box:

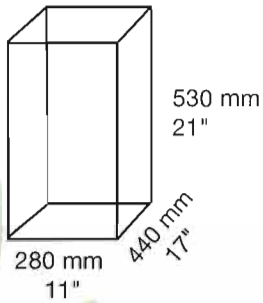

Safety – Standards – Hygiene

This juicer has been designed to comply with the most severe international safety and hygiene regulation in conformity with the standards, especially:

- Machinery directive 98/37/EC
- Electromagnetic compatibility 89/336/EEC
- Electrical equipment designed for use within certain voltage limits "low voltage" 73/23/EEC
- RoHS directive 2002/95/EC
- Harmonized European standards: EN 12100-10 and 2: 2004 – EN 60204-1: 2006 – EN 60335-1: 2002
- CE European standards
- GS (Germany) controlled by LNE laboratory **pending**
- NSF (USA)
- UL (USA) et cUL (Canada) **pending**

Electrical safety:

On/Off interlock switch in waterproof
All mechanical parts are ground (earth) connected
All equipment is 100% tested at the end of assembly (special electrical testing bay)

Thermal safety :

Motor protected by internal thermal detector

Acoustic safety:

The asynchronous motor is particularly silent

Hygiene:

All removable parts can be put in a dishwasher or easily cleaned with hot soapy water.

Lever Juicer Evolution 70

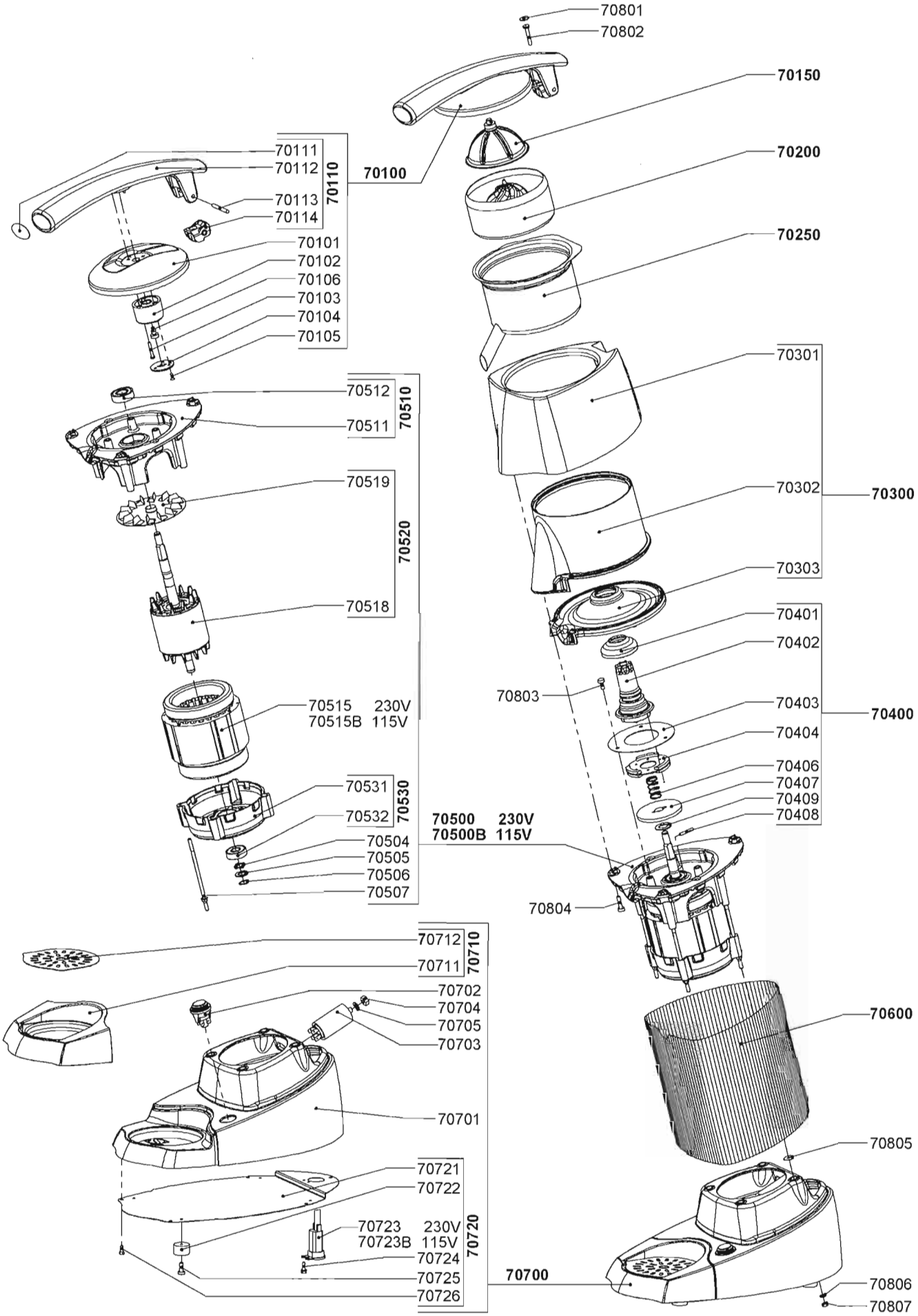

140 - 150, AVENUE ROGER SALENGRO - 69120 VAULX-EN-VELIN - LYON - FRANCE - TEL. 33 (0) 472 37 35 29 - FAX 33 (0) 478 26 58 21
Website: www.santos.fr - Email : santos@santos.fr

Imprimerie Ferreol 11/08