The Quiet One®

On-Counter Model: VM50031, In-Counter Model: VM51024

The ultimate blender with unparalleled sound reduction, exceptional beverage blends and improved speed of service.

Features

- Up to 4 times quieter than the competition due to innovative vibration dampening technology creates Vitamix quality drinks in a more enjoyable customer atmosphere.
- Magnetically secured floating sound enclosure is dramatically easier to clean and disassemble. No screws to damage the enclosure. No parts to lose.
- Variable speed control and automatic shut-off provide flexibility in creating endless recipes. The 6 program buttons with 34 optimized programs in memory provide operators with easy, consistent drinks every time. Custom blending programs can easily be created for signature drinks.
- Advance® container reduces blend and pour time, and has a longer blade life resulting in time and cost savings with improved customer experience.
- Designed for high performance and durability. Air management and powerful ~3 peak output HP motor reduces noise, improves reliability and reduces down time.

VM50031 pictured

Magnetically secured back cover makes it easy to clean.

Blueberry peach smoothie.

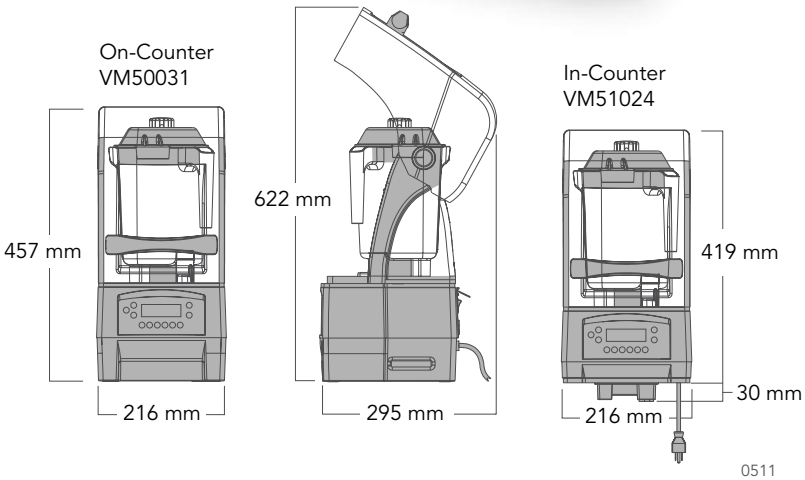

Specifications

Motor:	~3 peak output HP motor
Power:	1300 – 1500 Watts, 10 Amp
Includes:	1.4 litre high-impact, clear/ stackable Advance® container complete with Advance® blade assembly and lid compact enclosure

0511

All dimensions are nominal only.
Covered by 3 years warranty (1 year parts and labour followed by 2 years parts only).
Conditions apply. Refer to our Terms & Conditions of Trade.

Exclusive Distributor: ROBAND AUSTRALIA PTY LTD