Manufactured By

ROBAND AUSTRALIA PTY LTD

OPERATING INSTRUCTIONS

PIE WARMERS

Models **PM60, PM60G** **Version 1**

Special Features:

- Product Display Light
- Illuminated Sign Display
- Slimline Thermometer
- Stylish Design

These instructions cover the models of ROBAND® Pie Warmers only. Although there are slight variances between models, the installation, operation, care and maintenance procedure is the same for all.

19/11/2014

Roband® Australia is a wholly Australian owned company and has been manufacturing quality commercial catering equipment for the food service industry for more than 50 years. Roband products are engineered and manufactured to the highest standards to provide functionality, reliability and durability, and our quality products are exported world-wide.

Included in the comprehensive Roband® range are Toasters, Fryers, Milkshake Mixers, Rotisseries, Food Display Cabinets and much more.

Roband® Australia also acts as the Australian agents for Vitamix® Blenders, Noaw® Meat Slicers, Förje® Cookware, Robalec™ Soup/Rice Warmers, Robatherm Urns, Austheat® Fryers, Dipo Induction & Autofry Machines. Roband also has its own line of commercial cookware and cutlery under the Robinox® brand name.

For a complete set of brochures please contact your nearest authorised dealer or contact Roband directly at our head office.

Roband Head Office Sydney, Australia		
Roband Australia Pty Ltd	**Tel:**	+61 2 9971 1788
1 Inman Road	**Fax:**	+61 2 9971 1336
Dee Why NSW 2099	**Email:**	sales@roband.com.au
AUSTRALIA	**Web:**	www.roband.com.au

International Agents

For additional agents please email Head Office

Cyprus:	United Catering Equipment Supplies Ph: +357 777 777 24	**Switzer-land:**	Burgi Infra Grill Ph: +41 418 554 552
Fiji:	Hotel Equipment Ltd Ph: +679 672 0666	**Thailand:**	Seven Five Distributors Co Ltd Ph: +662 866 5858
Hong Kong:	Chung Wah Kitchen Machine Ltd Ph: +852 2334 5411	**United Arab Emirates:**	Boncafe Middle East LLC +9714 282 8742
Malaysia:	Allied Food Equipment Ph: +603 9133 5833	**United Arab Emirates:**	Nisa Trading LLC +9714 396 6132
Maldives:	Radiant Heat Maldives Pty Ltd Ph: +960 333 4845	**United Kingdom:**	Metcalfe Catering Equipment Ph +44 1766 830 456
New Zealand:	Roband New Zealand Ph: +649 274 1354	**USA:**	Condon & Fisher International Ph: +1 508 361 9226
Noumea:	Comptoir Materiel Professionnel Ph: +687 28 50 43	**USA:**	Condon & Fisher International Ph: +1 508 361 9226
Papua New Guinea:	Brian Bell & Company Pty Ltd Ph: +675 325 5411	**NETHERLA-NDS**	AKB Bert Muller Ph: +31 306 017 442
Singapore:	Allied Foodservice Equipment Ph: +65 62525880	**GREECE**	K&N Engineers Ltd Ph: +30 210 520 0440

© Copyright 2014 – Roband® Australia Pty Ltd

All rights reserved. No part of this work may be reproduced or copied in any form or by any means, electronic or mechanical, including photocopying or posting to a website, without the written permission of the publisher. The material contained within this document is intended entirely for instructional purposes.

CONTENTS

INTRODUCTION 1
GENERAL PRECAUTIONS 1
PACKAGING 2
COMPLIANCE 2
INSTALLATION 3
OPERATION 4
A GUIDE TO THE HEATING OF PIES 5
PRODUCT PLACEMENT 6
GENERAL SAFETY 7
CLEANING, CARE & MAINTENANCE 8
TROUBLESHOOTING 9
SPECIFICATION 9
CIRCUIT DIAGRAM 10
EXPLODED DIAGRAM 11
APPENDIX A 13
WARRANTY 16

INTRODUCTION

Congratulations on your purchase of this quality ROBAND® product. With proper care and management your new purchase will give you years of trouble free service.

By reading these instructions carefully you can ensure that this machine is used and maintained properly, helping your new investment to perform well for you now, and to continue performing in the many years to come.

GENERAL PRECAUTIONS

This machine must only be operated by qualified person(s) who are fully versed in the operating and safety instructions described in this manual. Servicepersons should be instructed to familiarise themselves with any and all safety instructions described in this manual prior to commencement of any maintenance or service.

In the case of new personnel, training is to be provided in advance. These machines should not be operated by persons (including children) with reduced physical, sensory or mental capabilities, or lack of experience or knowledge, unless they have been given supervision or instruction concerning the safe use of the appliance by a person responsible for their safety.

These machines are heating units, and as with any commercial heating unit the surfaces on these Pie Warmers will get hot. Always be careful when near an operating Pie Warmer, and ensure that any risk to unwary customers or staff is minimised with additional signage if necessary. Due to the obvious heat hazard Roband recommends that these units be kept out of reach of children. Do not allow children to play with these units.

The machine should be disconnected from all power and allowed to cool before cleaning. Any damaged plug or cord should be replaced before further use.

These machines should not be cleaned with the use of a water jet or any other method except those outlined in the Cleaning & Care section of these instructions.

Roband will accept no liability if;

- Non-authorised personnel have tampered with the machine.
- The instructions in this manual have not been followed correctly.
- Non-original spare parts are used.
- The machine is not cleaned correctly, with the right product.
- There is any damage to the unit.
- The machine has been modified in any way.

PACKAGING

All care is taken when packing and Roband ensures that every unit is functional and undamaged at the time of packaging.

The Package of this Pie Warmer should include:

1. One Pie Warmer
2. Four Shelves and two side racks
3. One Crumb Tray
4. Six Glass Panels (PM60G)
5. Five Glass Panels (PM60)
6. Packaging Inserts/Materials
7. This Manual
8. Four feet, knobs and screws

Any damage to the machine as a result of freight must be reported to the Freight Company and to the agent responsible for the dispatch of said unit within 24 hours of receipt. No claims will be accepted or entertained after this period.

COMPLIANCE

RCM:

Roband® products have been designed and manufactured to comply with any and all specifications set out by the Australian Communications and Media Authority (ACMA) in regards to Electromagnetic Compatibility. As testament to such compliance these units bear the RCM symbol.

For further information contact the Australian Communications Authority, PO Box 13112, Law Courts, Melbourne VIC 8010.

INSTALLATION

Remove all the packaging materials and tape, as well as any protective plastic from the machine. Clean off any glue residue left over from the protective plastic or tape using methylated spirit.

Place the warmer on a firm, level surface in the required position. As a precaution, it is recommended that all non-metal bench top surfaces be protected from heat with some form of insulation. A piece of masonite, sheet metal, laminate or similar material would be sufficient for this task.

Install the feet on the pie warmer, and adjust the feet individually to ensure the unit is level.

Take a moment to inspect the unit to make sure that it is undamaged as a result of any freight it may have been through. Familiarise yourself with the functioning of the switches. Turn all of the switches on and off a couple of times to ensure you are comfortable with their operation.

Before connecting the Pie Warmer to the power supply, ensure that the thermostat, the light switch and the main On/Off switch are in the "OFF" position.

Plug the pie warmer into a standard, single phase, 10Amp power point.

National Standards exist outlining the positioning, spacing and ventilation requirements when installing new appliances. These Standards should be consulted and new equipment should be installed accordingly. In any situation where specifications allow a distance of less than 100mm we would still recommend that a well-ventilated air gap of not less than 100mm be maintained. If the machine is near particularly heat-sensitive materials common sense should be employed in determining sufficient distancing.

Always ensure the power cable is not in contact with hot parts of the Pie Warmer when in use, and have any damaged power cord replaced immediately.

OPERATION

Actuate the Green rocker switch to the '1' (ON) position to turn on the unit. The switch should then illuminate to show that the machine is on.

The pie warmer is thermostatically controlled. Rotate the thermostat knob to select the desired operating temperature, usually about 85-90°C for pies and sausage rolls. The thermostat will then cycle on and off to maintain the set temperature. The orange pilot light (located above the thermostat knob) will also cycle on and off, indicating when the warmer is being heated and when the set temperature has been reached.

It is recommended that the pie warmer be pre-heated before placing food inside. As a guide, it is usually best to pre-heat the pie warmer for *at least* 20 minutes.

HAZARD Please note that the warmer should **not** be operated without the crumb tray in position.

It should be emphasised that **these units are designed as food warmers**. As such, they are designed for use with freshly baked or thawed refrigerated product.

While it is outside the scope of the design of these units to use them with frozen product it is highly recommended that, if frozen product is being used, the product be thawed before being put in the Pie Warmer. If frozen product is placed in these units significant time should be added to the preparation in order to produce the desired serving temperature.

Overall, the general conditions of the Australia New Zealand Food Standards Code should be met. At the time of writing these instructions, this standard states that food must be served below 5°C or above 60°C.

This pie warmer has the added feature of an interior light. The light will always be on whenever the pie warmer is on. The interior fluorescent light can be changed in the following manner;

- Access is gained to the fluorescent light by removing the cover for the illuminated sign. A Phillips head screwdriver will be required.
- Once the cover has been removed, slide out the sign to gain access to the light cavity.
- Rotate the fluorescent tube 90° upwards and the tube should slide out downwards.
- Insert a new tube in place and rotate it 90° downwards. Slide the sign back into place and screw the cover back on.

HAZARD Safety Note: When opening and closing the glass doors grip the knob with your fingertips and gently slide the doors. Do not use excessive force and avoid touching the glass whilst gripping the knob. Insulating gloves should be worn if these units are being operated at high temperatures (>110°C).

A GUIDE TO THE HEATING OF PIES

These units are best utilised for maintaining and displaying freshly cooked Pies, Pasties and Sausage Rolls. Best results will be achieved with freshly baked pies being placed into the pre-heated cabinet.

As most Pies sold now are pre-cooked and delivered either frozen or at room temperature the above circumstances are somewhat uncommon.

Approximate times for products to reach serving temperature when thawed (room temperature) foods are placed in a pre-heated unit are as follows

Meat Pies ..... 45-60 mins **Sausage Rolls** .....25-35 mins

Party Pies ..... 25-30 mins **Pasties/Pockets** .....20-30 mins

It is highly recommended that, if frozen pies are being used, the pies be thawed before being put in the Pie Warmer. If frozen product is heated in these units add *at least 1½ hours* to the preparation time.

Use of high temperatures to speed up the heating and preparation of frozen pies has several drawbacks;

- The external surfaces of the Pie Warmer will get exceedingly hot and present a greater hazard to unwary staff or customers.
- The extended cooking times for frozen pies will reduce the overall production capability of the Pie Warmer in that the daily quantity of pies that are able to be prepared will be reduced.
- Power consumption of the unit will increase, thereby costing more in electricity rates.

PRODUCT PLACEMENT

Due to the heat emission from the element the hottest shelves in the Pie warmer will be the bottom shelves. When new product is placed in the unit throughout the day it is recommended that these shelves be utilised to prepare the food more quickly.

Sausage rolls, Pasties
Sausage rolls, Pasties
Pies
Pies

Full Pie Warmer

Sausage rolls, Pasties
Sausage rolls, Pasties
Pies, Pizza Pockets
Empty

Partially Loaded Pie Warmer

If the unit is fully loaded it is desirable to have the tightest packed or most crowded shelf of products on the top shelves, as the tightly packed product can restrict the heat from rising to the food above. Restricting the heat convection in this manner will extend the times required to heat the rest of the product to serving temperatures.

SAFETY

GENERAL SAFETY

This machine contains no user-serviceable parts. Roband Australia, one of our agents, or a similarly qualified person(s) should carry out any and all repairs.

Steel cutting processes such as those used in the construction of this machine may result in sharp edges. Whilst any such edges are removed to the best of our ability it is always wise to take care when contacting any edge.

Do not remove any cover panels that may be on the machine.

Replace any damaged supply cord immediately.

This unit can get **very** hot. Ensure everyone is aware that the machine is operating and take care to avoid contact with hot surfaces. If operating at thermostat settings above 110°C provide and use heat-insulating gloves when opening doors.

SAFETY GLASS

The Toughened Safety Glass used in the ROBAND® Pie Warmers is about 5 times stronger than normal glass. In addition to this strength the toughened glass is able to handle high temperatures and it is designed to shatter into small, relatively harmless pieces in the event of breakage. These glass pieces can be collected carefully by hand without resulting in lacerations.

This type of glass has a rather unusual property as a direct result of its toughened nature. When the glass takes an impact that does not immediately shatter the piece, it “stores” that stress in the glass layers. This stress “storage” is invisible and unable to be measured, but it is there nonetheless.

The storing of a stress is only temporary. If the glass suffers a sufficient impact and the stress is stored, it will one day be released. There is no way to measure when this release will occur, it could be after a few minutes, or it could be years later. When the stored stress is released the glass will spontaneously shatter. This could occur at any time, even when the machine is off and nobody is near it.

On **extremely rare** occasions a glass door will “explode”. This is a rare but entirely normal property of the glass, and although pieces of shattered glass may travel several metres, if they do contact bare skin they should not cause injury (even if you are directly in front of the explosion). It is important that any contaminated product be thrown away.

The alternative to such safety glass is to have glass that can be very dangerous when broken, or worse, could chip off and fall onto the food within (without being noticed). It is the opinion of Roband Australia that Toughened glass is superior to both “Clear Float” and “Ceramic” glass with regards to function and safety. If glass doors are a concern a set of Stainless steel doors may be purchased as an alternative (contact your supplier).

CLEANING, CARE & MAINTENANCE

Attention to regular care and maintenance will ensure long and trouble free operation of your toaster. Although scheduled servicing is not required we do recommend you adopt a program of regular maintenance to ensure that the machine is clean and functional and to avoid inadvertently damaging the unit.

- Ensure the power is off and the Pie Warmer is cool before attempting to clean any part of the machine.
- Wipe the surfaces down with warm soapy water using a **damp** sponge or cloth. **Do not** immerse the unit in water or allow the ingress of water into the ventilation holes or controls. This unit is not suitable for cleaning with the aid of a water jet or similar system.
- Daily cleaning of the crumb tray is essential. The crumb tray may be removed by sliding it out from the unit. The crumb tray should be emptied and washed with warm soapy water.
- The glass should be cleaned daily with an appropriate cleaning agent for both aesthetic and hygienic reasons.
- Always ensure the power cable is not in contact with hot parts of the Pie Warmer when in use, and have any damaged power cord replaced immediately.

Note: If foil is used to cover the trays the foil should be replaced daily, and ventilation holes must be made every few centimetres to allow the food to be heated evenly throughout the unit.

Note: Some cleaning agents can damage stainless steel, usually through prolonged use. For this reason we recommend cleaning with soapy water. Any damage to the unit through the use of harsh or improper cleaning agents is entirely the fault of the user.

H HAZARD **CAUTION:** Handle glass with care when cleaning.

H HAZARD **CAUTION:** Although every care is taken during manufacture to remove all sharp edges, care should be taken when cleaning and handling the Pie Warmer to avoid injury.

TROUBLESHOOTING

If the Pie Warmer does not function check the following points before calling for service.

- ✓ The machine is plugged in correctly and the power switched on.
- ✓ The power point is not faulty.
- ✓ The thermostat is not in the “OFF” position.
- ✓ The thermostat knob is not loose or broken, rendering the switch inoperable.
- ✓ The Green on/off switch is not in the “OFF” position.

Only after all these points have been checked should you call for service.

SPECIFICATION

Model	**PM60G, PM60**
Power Source	220-240 Volts AC
Power Consumption	1313-1565 Watts
Nominal Dimensions;	
Width	652mm
Height	669mm
Depth	488mm

Constant Research & Development may necessitate machine changes at any time.

CIRCUIT DIAGRAM

MODEL: PM60, PM60G

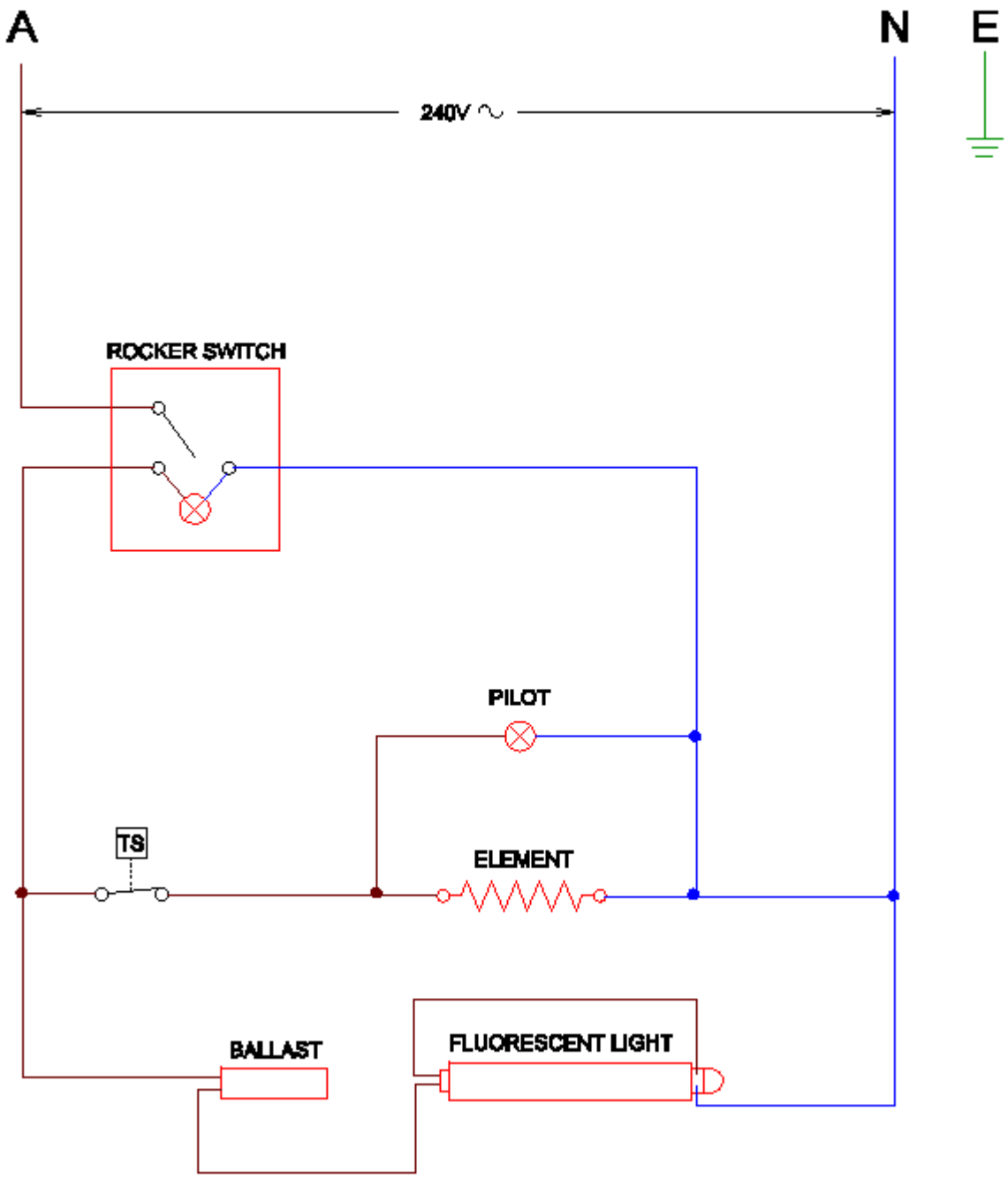

NOTE: This circuit diagram has been provided for reference and to assist qualified service and repair agents only. Under no circumstances should a person not suitably qualified attempt repairs to any electrical equipment.

Note: Wire from Ballast to Fluorescent Tube is red

Wire from one end of the tube to the other is red

EXPLODED DIAGRAM

MODEL: PM60G

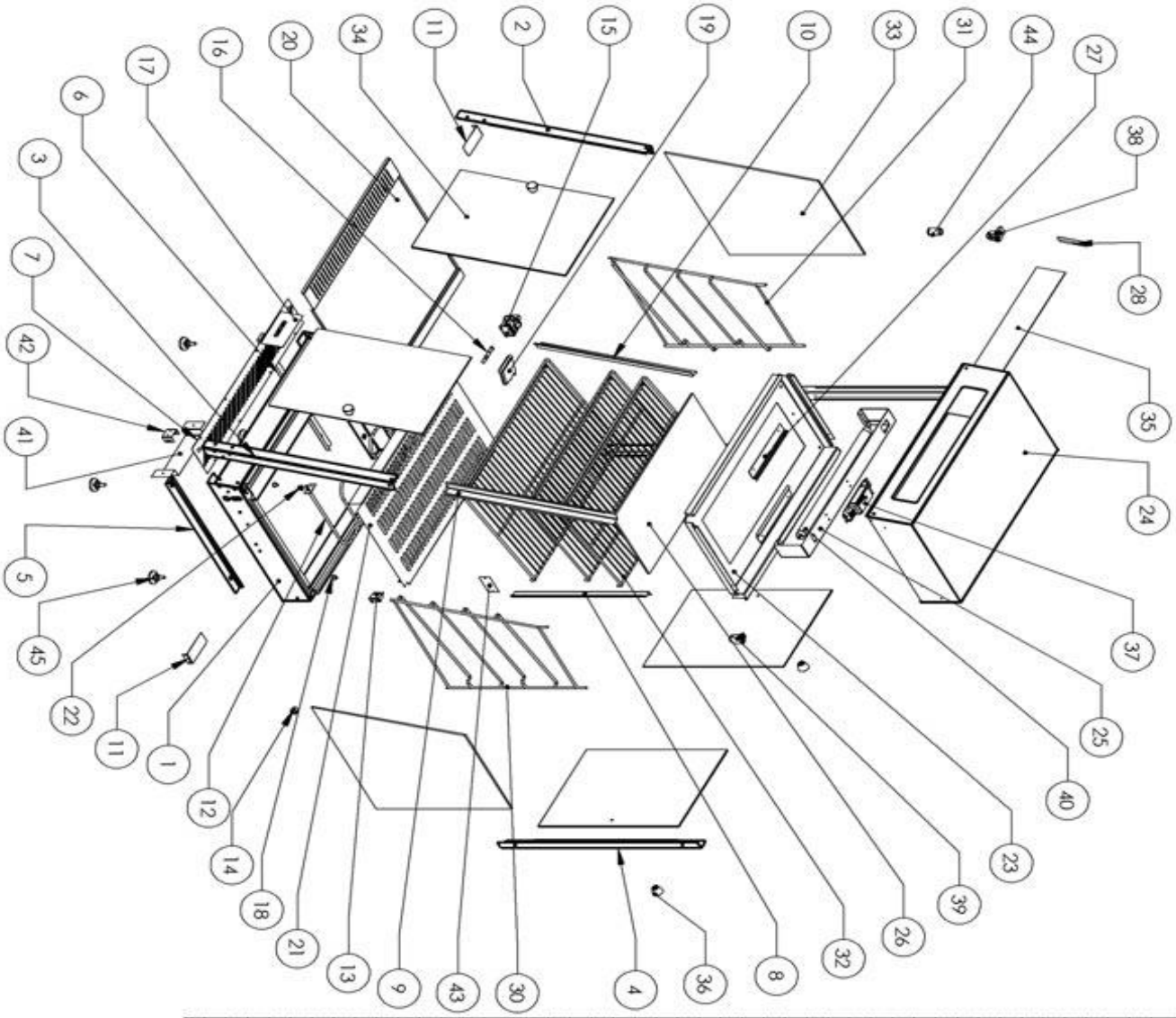

ITEM NO.	QTY.	PART NO.
1	1	SS1535 - Base Complete
2	1	SS1544 - LH Angle corner
3	1	SS1547 - RH Angle Corner
4	2	SS1551 - Straight Corner
5	1	SS1565 - RH Crumb Tray Guide
6	1	SS1566 - LH Crumb Tray Guide
7	1	SS1567 - Cntrl Box Bttm
8	2	SS1552 - Straight internal corner
9	1	SS1548 - Wire Angle
10	1	SS1545 - Non Wire Angle
11	2	SS1564 - Element Support
12	1	HC0043 - PA50 Element
13	1	EC0179 - Rocker-Green Indicating
14	1	PC0060 - Cord Clamp 10A
15	1	TS0003 - Thermostat 120° & Knob
16	1	EC0184 - Pilot - 6mm Amber, T120
17	1	NC0058 - Decal
18	4	MC0279 - Nutsert - M8 Thin Sheet
19	1	MC0524 - Thermometer Slimline 50-200
20	1	SS1563 - Crumb Tray
21	1	SS1562 - Element Baffle
22	1	PC0139 - Bush - Nylon Ø0.5inch
23	1	SS1553 - Ceiling Complete
24	1	SS1557 - Top Complete
25	1	SS1568 - Light Bracket
26	1	GC0094 - Ceiling Glass
27	1	SS1570 - Bracket Ceiling Glass Front
28	1	SS1571 - Ad Protector
29	2	MC0592 - Wire Rack Large
30	1	MC0593 - Side Rack RH
31	1	MC0594 - Side Rack LH
32	2	MC0591 - Wire Rack Small
33	2	GC0095 - Side Glass
34	4	GC0096 - Glass Door
35	1	PC0139 - Opal Sign Polycarb
36	4	PC0033 - Small Knob
37	1	EC0130 - Ballast
38	1	EC0123 - Fluro Lamp Holder & Start Base
39	1	EC0122 - Fluro Lamp Holder
40	1	EC0214 - Flouro Lamp
41	1	SS1543 - Bulb Protector
42	1	SS0942 - Thermostat & Thermometer Bulb Clip
43	1	NC0005 - Rating Plate Blue
44	1	EC0131 - Starter
45	4	PS0011 - Foot Set & Nuts

MODEL: PM60

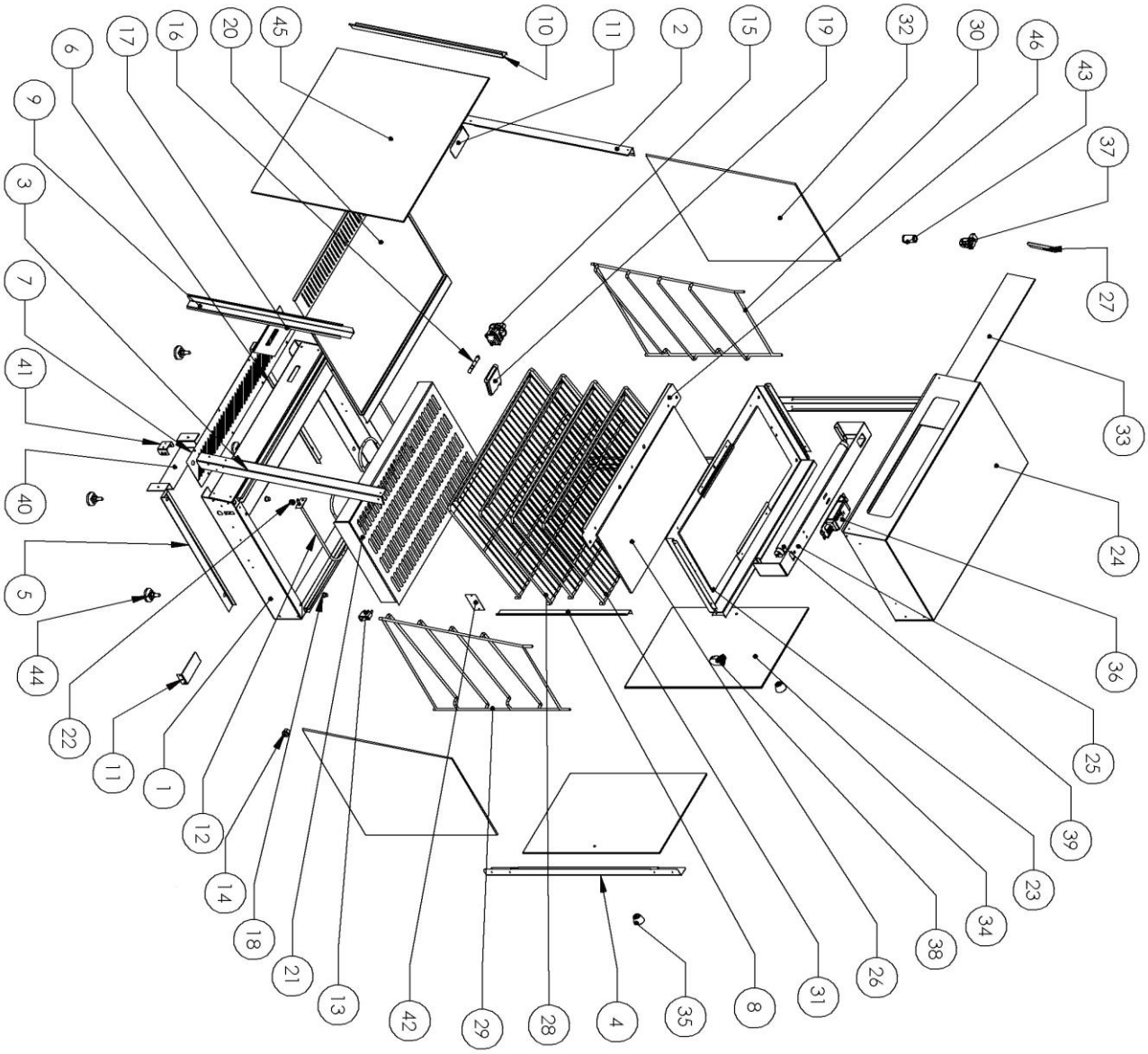

ITEM NO.	QTY.	PART NO.
1	1	SS1535 - Base Complete
2	1	SS1544 - LH Angle corner
3	1	SS1547 - RH Angle Corner
4	2	SS1551 - Straight Corner
5	1	SS1565 - RH Crumb Tray Guide
6	1	SS1566 - LH Crumb Tray Guide
7	1	SS1567 - Cntrl Box Bttm
8	2	SS1552 - Straight internal corner
9	1	SS1548 - Wire Angle
10	1	SS1545 - Non Wire Angle
11	2	SS1564 - Element Support
12	1	HC0043 - PA50 Element
13	1	EC0179 - Rocker-Green Indicating
14	1	PC0060 - Cord Clamp 10A
15	1	TS0003 - Thermostat 120° & Knob
16	1	EC0184 - Pilot - 6mm Amber, T120
17	1	NC0058 - Decal
18	4	MC0279 - Nutsert - M8 Thin Sheet
19	1	MC0524 - Thermometer Slimline 50-200
20	1	SS1563 - Crumb Tray
21	1	SS1562 - Element Baffle
22	1	PC0139 - Bush - Nylon Ø0.5inch
23	1	SS1754 - Ceiling Complete
24	1	SS1557 - Top Complete
25	1	SS1568 - Light Bracket
26	1	GC0094 - Ceiling Glass
27	1	SS1571 - Ad Protector
28	2	MC0592 - Wire Rack Large
29	1	MC0593 - Side Rack RH
30	1	MC0594 - Side Rack LH
31	2	MC0591 - Wire Rack Small
32	2	GC0095 - Side Glass
33	1	PC0139 - Opal Sign Polycarb
34	2	GC0096 - Glass Door
35	2	PC0033 - Small Knob
36	1	EC0130 - Ballast
37	1	EC0123 - Fluro Lamp Holder & Start Base
38	1	EC0122 - Fluro Lamp Holder
39	1	EC0214 - Flouro Lamp
40	1	SS1543 - Bulb Protector
41	1	SS0942 - Thermostat & Thermometer Bulb Clip
42	1	NC0005 - Rating Plate Blue
43	1	EC0131 - Starter
44	4	PS0011 - Foot Set & Nuts
45	1	GC0100 - Front Glass
46	1	SS1753 - Front Glass Support

APPENDIX A

RESIDUAL CURRENT DEVICES (RCD'S)

Also known as Earth Leakage Protection systems an RCD is a protective device that automatically disconnects the active conductors of a circuit when an earth leakage current reaches a predetermined value.

Although RCD's are mandatory in domestic installations, and in the final sub-circuits of residential-type areas, the Australian Standards quote that the requirement of an RCD does "not apply to a socket-outlet…..for the connection of fixed electric cooking appliances, such as ranges, ovens or hotplates"

In installations that are neither Domestic nor Residential-type, AS/NZS 3000 2.5.3.3 states that RCD's are needed only in situations where equipment may represent an increased risk of electric shock to the user, and there are many special comments related to the use of heating elements.

AS/NZS3000 2.5.2 gives the following warnings that should have been taken into consideration when an RCD circuit was installed.

> *To avoid unwanted tripping due to leakage currents and transient disturbances, care should be taken to ensure that the sum of the leakage currents of electrical equipment on the load side of an RCD is less than 1/3 of its rated residual current.*
>
> *To avoid excessive leakage current causing unwanted tripping where socket-outlets are protected by one RCD having a rated residual current not greater than 30mA, consideration should be given to the number of socket-outlets protected and the nature of electrical equipment likely to be connected to the socket-outlets.*

Tubular elements (such as those used in this unit) reaching temperatures greater than 110°C are subject to moisture absorption and therefore earth leakage current generation. Should the installation and use of this unit trip an RCD the unit will need to be run on a circuit without an RCD (as mentioned above) for approximately 30-60 minutes, after which time the elements should have dried out and the machine should function normally. If you are unable to locate a circuit without an RCD please contact your supplier, or if you prefer you can contact Roband and send the unit to one of our offices where we can run the machine on a suitable circuit free of charge (a return freight charge may apply).

NOTES

(Record any preferred times or settings etc. here to act as a quick reference for other users)

NOTES

(Record any preferred times or settings etc. here to act as a quick reference for other users)

WARRANTY

Every care is taken to ensure that no defective equipment leaves our factory and all goods manufactured by us are guaranteed against defective workmanship and materials for a period of 12 months from the date of purchase. Roband Australia's obligations pursuant to this express warranty being limited to the repair or replacement of the defective goods or materials, at is option and subject to the terms contained within this Warranty statement. Where relevant, glass, Teflon® and lamps are **not** included in this warranty and RCD tripping due to moisture absorption by Tubular Heating Elements is not considered a warranty fault.

Generally, all goods claimed under this warranty must be returned to the factory or an authorized service agent, freight prepaid, for inspection. All parts deemed to be defective will be replaced, however, no claims will be entertained for second hand products, or parts damaged in transport, misused or modified in any way without our approval. For machines that are not considered to be portable (e.g. food bars, rotisseries, large hotplates and some bain maries), on site warranty service will be provided in capital city metropolitan areas only. In all other locations, the customer is responsible for all travelling time/service call costs and payment for this will be required prior to the commencement of the repair. The labour costs to actually repair the fault will be met by the company.

Any repairs or replacement of defective goods or materials pursuant to this warranty, must be authorized by Roband Australia prior to any action being taken. The company reserves the right to reject a claim for warranty if it is not completely satisfied with the circumstances under which it occurred and any other costs incurred for false claims or faults due to incorrect usage etc. are the responsibility of the claimant. Roband Australia Pty Ltd nor any subsidiary company or Agent shall be liable for loss of profit or damage to other equipment and property except where it is in breach of the guarantees provided in accordance with Schedule 2 of the Competition and Consumer Act 2010 (Cth) or the applicable legislation from time to time.

The goods come with guarantees that cannot be excluded under the Australian Consumer Law (ACL). You are entitled to a replacement or refund for a major failure and for compensation for any other reasonably forseeable loss or damage. You are also entitled to have the goods repaired or replaced if they fail to be of acceptable quality and the failure does not constitute a major failure.

Generally, authorized service agents are located in all areas which have authorized distribution dealers. For the name of your nearest Australian authorised service agent, please contact:

Roband Australia Pty Ltd

1 Inman Road, Cromer, NSW 2099

Warranty Number: 1800 268 848

Phone: (02) 9971 1788 Fax: (02) 9971 1336

All other countries please contact your selling Agent.

Please complete the following details and keep this card in a safe place.

NAME_____

ADDRESS_____

MODEL No:_____SERIAL No: _____DATE PURCHASE_____

NAME OF DEALER:_____

PLEASE RETAIN THIS SECTION FOR YOUR RECORDS

DO NOT POST

ROBAND® AUSTRALIA PTY LTD

OTHER LEADING PRODUCTS AVAILABLE:

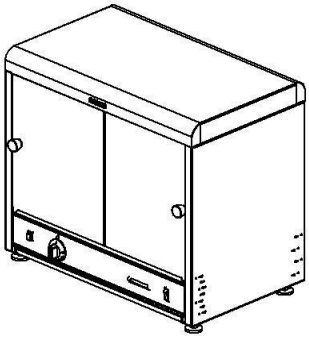

π-PLUS
PIE & FOOD WARMERS

DRINK MIXERS

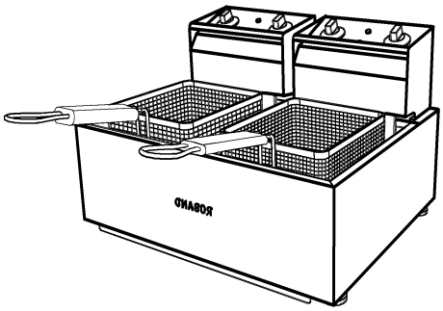

HIGH PERFORMANCE DEEP FRYERS

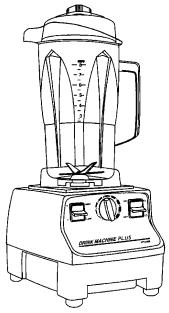

VITAMIX BLENDERS

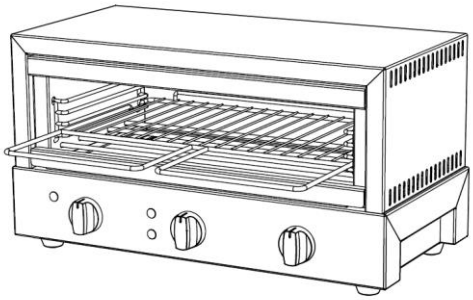

GRILLMAX TOASTERS

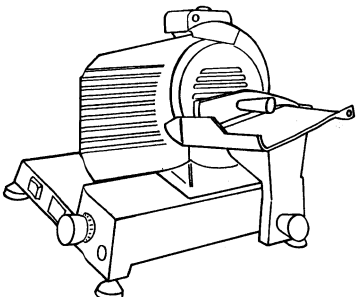

NOAW Slicers

Manufactured/Imported in Australia by:

ROBAND AUSTRALIA PTY LTD

Authorised Distributor/Agent