Manufactured By

ROBAND AUSTRALIA PTY LTD

OPERATING INSTRUCTIONS

PIE & FOOD WARMERS

Models	**40DT, 80DT**	**Version 1**
	83DT	**Version 2**
Special Models	**83DTS2**	**Version 1**

These instructions cover the models of ROBAND® Pie & Food Warmers only. Although there are slight variances between models, the installation, operation, care and maintenance procedure is the same for all.

8/09/2014

Roband® Australia is a wholly Australian owned company and has been manufacturing quality commercial catering equipment for the food service industry for more than 50 years. Roband products are engineered and manufactured to the highest standards to provide functionality, reliability and durability, and our quality products are exported world-wide.

Included in the comprehensive Roband® range are Toasters, Fryers, Milkshake Mixers, Rotisseries, Food Display Cabinets and much more.

Roband® Australia also acts as the Australian agents for Vitamix® Blenders, Noaw® Meat Slicers, Förje® Cookware, Robalec™ Soup/Rice Warmers, Robatherm Urns, Austheat® Fryers, Dipo Induction & Autofry Machines. Roband also has its own line of commercial cookware and cutlery under the Robinox® brand name.

For a complete set of brochures please contact your nearest authorised dealer or contact Roband directly at our head office.

Roband Head Office Sydney, Australia		
Roband Australia Pty Ltd	**Tel:**	+61 2 9971 1788
1 Inman Road	**Fax:**	+61 2 9971 1336
Dee Why NSW 2099	**Email:**	sales@roband.com.au
AUSTRALIA	**Web:**	www.roband.com.au

International Agents

For additional agents please email Head Office

Cyprus:	United Catering Equipment Supplies Ph: +357 777 777 24	**Switzer-land:**	Burgi Infra Grill Ph: +41 418 554 552
Fiji:	Hotel Equipment Ltd Ph: +679 672 0666	**Thailand:**	Seven Five Distributors Co Ltd Ph: +662 866 5858
Hong Kong:	Chung Wah Kitchen Machine Ltd Ph: +852 2334 5411	**United Arab Emirates:**	Boncafe Middle East LLC +9714 282 8742
Malaysia:	Allied Food Equipment Ph: +603 9133 5833	**United Arab Emirates:**	Nisa Trading LLC +9714 396 6132
Maldives:	Radiant Heat Maldives Pty Ltd Ph: +960 333 4845	**United Kingdom:**	Metcalfe Catering Equipment Ph +44 1766 830 456
New Zealand:	Roband New Zealand Ph: +649 274 1354	**USA:**	Condon & Fisher International Ph: +1 508 361 9226
Noumea:	Comptoir Materiel Professionnel Ph: +687 28 50 43	**USA:**	Condon & Fisher International Ph: +1 508 361 9226
Papua New Guinea:	Brian Bell & Company Pty Ltd Ph: +675 325 5411	**NETHERLA-NDS**	AKB Bert Muller Ph: +31 306 017 442
Singapore:	Allied Foodservice Equipment Ph: +65 62525880	**GREECE**	K&N Engineers Ltd Ph: +30 210 520 0440

© Copyright 2014 – Roband® Australia Pty Ltd

All rights reserved. No part of this work may be reproduced or copied in any form or by any means, electronic or mechanical, including photocopying or posting to a website, without the written permission of the publisher. The material contained within this document is intended entirely for instructional purposes.

CONTENTS

INTRODUCTION 1
GENERAL PRECAUTIONS 1
PACKAGING 2
COMPLIANCE 2
INSTALLATION 3
OPERATION 4
GENERAL SAFETY 5
CLEANING, CARE & MAINTENANCE 6
TROUBLESHOOTING 7
SPECIFICATION 8
CIRCUIT DIAGRAM 9
EXPLODED DIAGRAM 10
APPENDIX A 11
WARRANTY 12

INTRODUCTION

Congratulations on your purchase of this quality ROBAND® product. With proper care and management your new purchase will give you years of trouble free service.

By reading these instructions carefully you can ensure that this machine is used and maintained properly, helping your new investment to perform well for you now, and to continue performing in the many years to come.

GENERAL PRECAUTIONS

This machine must only be operated by qualified person(s) who are fully versed in the operating and safety instructions described in this manual.

Service persons should be instructed to familiarise themselves with any and all safety instructions described in this manual prior to commencement of maintenance.

In the case of new personnel, training is to be provided in advance. These machines should not be operated by persons (including children) with reduced physical, sensory or mental capabilities, or lack of experience or knowledge, unless they have been given supervision or instruction concerning the safe use of the appliance by a person responsible for their safety.

These machines are heating units, and as with any commercial heating unit the surfaces will get hot. Always be careful when near an operating Soup Kettle, and ensure that any risk to unwary customers or staff is minimised with additional signage if necessary. Due to the obvious heat hazard Roband recommends that these units be kept out of reach of children.

The performance of this unit cannot be guaranteed for operational use outside its design parameters.

The machine should be disconnected from all power and allowed to cool before cleaning.

Roband will accept no liability if;

- Non-authorised personnel have tampered with the machine.
- The instructions in this manual have not been followed correctly.
- Non-original spare parts are used.
- The machine is not cleaned correctly, with the right product.
- There is any damage to the unit.

PACKAGING

All care is taken when packing and Roband ensures that every unit is functional and undamaged at the time of packaging.

The Package of this Pie Warmer should include:

1) One Pie Warmer (appropriate model) – includes shelves and crumb tray
2) This Manual
3) Packaging Materials

Any damage to the machine as a result of freight must be reported to the Freight Company and to the agent responsible for the despatch of said unit within three (3) days of receipt. No claims will be accepted or entertained after this period.

COMPLIANCE

Roband® products have been designed and manufactured to comply with any and all specifications set out by the Australian Communications and Media Authority (ACMA) in regards to Electromagnetic Compatibility. As testament to such compliance these units bear the RCM symbol.

For further information contact the Australian Communications Authority, PO Box 13112, Law Courts, Melbourne VIC 8010.

INSTALLATION

Remove all the packaging materials and tape, as well as any protective plastic from the machine. Clean off any glue residue left over from the protective plastic or tape using methylated spirit.

Place the warmer on a firm, level surface in the required position. As a precaution, it is recommended that all non-metal bench top surfaces be protected from heat with some form of insulation. A piece of masonite, sheet metal, laminate or similar material would be sufficient for this task.

Before connecting the Pie & Food Warmer to the power supply, ensure that the thermostat is in the "OFF" position.

Plug the pie and food warmer into a standard, single phase, 10Amp power point.

Take care to ensure that the power cord cannot be damaged by coming into contact with the hot parts of the warmer during operation.

National Standards exist outlining the positioning, spacing and ventilation requirements when installing new appliances. These Standards should be consulted and new equipment should be installed accordingly. In any situation where specifications allow a distance of less than 100mm we would still recommend that a well-ventilated air gap of not less than 100mm be maintained. If the machine is near particularly heat-sensitive materials common sense should be employed in determining sufficient distancing.

OPERATION

The pie warmer is thermostatically controlled. Rotate the thermostat knob to select the desired operating temperature, usually about 85-90°C for pies and sausage rolls. The thermostat will then cycle on and off to maintain the set temperature. The pilot light will also cycle on and off, indicating when the warmer is being heated and when the set temperature has been reached.

It is recommended that the pie warmer be pre-heated before placing food inside. As a guide, pre-heat the pie warmer on the maximum temperature setting for 10 minutes. After this period return the thermostat to the desired operating temperature.

Please note that the warmer should **not** be operated without the crumb tray in position.

It should be emphasised that these units are designed as food warmers. As such, they are designed for use with freshly baked or refrigerated product.

While it is outside the scope of the design of these units to use them with frozen product it is highly recommended that, if frozen product is being used, the product be thawed before being put in the Pie Warmer. If frozen product is placed in these units significant time should be added to the preparation in order to produce the desired serving temperature.

Overall, the general conditions of the Australia New Zealand Food Standards Code should be met. At the time of writing these instructions, this standard states that food must be served below 5°C or above 60°C.

Due to the heat emission from the element and the thermal properties of air the hottest shelves in the Pie warmer will be the top and bottom shelves. When new product is placed in the unit throughout the day it is recommended that these top and bottom shelves be utilised to prepare the food more quickly.

If foil is used to line the drawers or shelves, the foil must be sufficiently perforated to allow unrestricted circulation of the heated air.

Please note: Heating is generated from the bottom of the unit. Consideration should be given when loading product into the pie warmer to allow spacing on the lower racks so that the hot air can rise through the lower shelves to the upper shelves. If foil is placed underneath the product and covers the whole shelf, then the ability for the hot air to rise is reduced and the uppermost shelves wont be as hot as intended. When using foil, ensure that sufficient area is free on each shelf for air to pass through.

ADDITIONAL OPERATION INSTRUCTIONS FOR SPECIAL MACHINES

Model: 83DTS2 - 85°C Thermostat with Thermal Protection and Element Baffle

The 83DTS2 has a lower temperature 85°C thermostat which will ensure that contents of the pie warmer cannot be overheated before serving. Additionally this special model has a thermal cut-out which is designed to limit the temperatures that the pie warmer can reach to 130°C.

The aluminium element baffle sits directly onto the element.

If the machine overheats for any reason and the thermal cut-out will be activated. The power light integrated inside the power switch will remain on but the amber heating light and element will be turned off. To reset, the pie warmer **must be turned off** and left to cool down. A qualified service technician should be contacted to repair the machine so that overheating will not occur again.

SAFETY

GENERAL SAFETY

This machine contains no user-serviceable parts. Roband Australia, one of our agents, or a similarly qualified person(s) should carry out any and all repairs. Any repair person(s) should be instructed to read the safety warnings within this manual before commencing work on these units.

Steel cutting processes such as those used in the construction of this machine result in sharp edges. Whilst any such edges are removed to the best of our ability it is always wise to take care when contacting any edge.

Do not remove any cover panels that may be on the machine.

This unit can get **very** hot. Ensure everyone is aware that the machine is operating and take care to avoid contact with hot surfaces.

Always ensure the power cable is not in contact with hot parts of the machine when in use.

Ensure that any damaged power cord is replaced before further use.

Keep out of reach of children.

CLEANING, CARE & MAINTENANCE

Attention to regular care and maintenance will ensure long and trouble free operation of your Pie Warmer.

Regular cleaning of the machine is essential. When cleaning, use warm soapy water and wipe with a **damp** sponge or cloth. All components are removable, as described below, to provide easy access.

- Ensure the power is off and the Pie Warmer is cool before attempting to clean any part of the machine.
- Wipe the surfaces down with warm soapy water using a **damp** sponge or cloth. **Do not** immerse the unit in water or allow the ingress of water into the ventilation holes or controls.
- For the 40DT and 80DT, the drawers can be removed by sliding them out.
- For the 83DT, the steel doors are removable. To remove them, lift them up, then slide them downwards and out.
- For the 83DT, the wire racks are removable once the steel doors have been removed
- Daily cleaning of the crumb tray is essential. The crumb tray may be removed by sliding it out from the unit. The crumb tray should be emptied and washed with warm soapy water.

Note: Some cleaning agents can damage stainless steel, usually through prolonged use. For this reason we recommend cleaning with soapy water. Any damage to the unit through the use of harsh or improper cleaning agents is entirely the fault of the user.

CAUTION: Although every care is taken during manufacture to remove all sharp edges, care should be taken when cleaning and handling the Pie Warmer to avoid injury.

TROUBLESHOOTING

If the Pie Warmer does not function check the following points before calling for service.

- ✓ The machine is plugged in correctly and the power switched on.
- ✓ The power point is not faulty.
- ✓ The thermostat is not in the “OFF” position.
- ✓ The thermostat knob is not loose or broken, rendering the switch inoperable.
- ✓ Check Appendix A on page 11 of this manual on RCD’s.
- ✓ Check Operation of Special Models (83DTS2) on page 4.

SPECIFICATION

Model	40DT	80DT	83DT
Power Source	220-240 Volts AC	220-240 Volts AC	220-240 Volts AC
Power Consumption	1050-1250 Watts	1050-1250 Watts	1050-1250 Watts
Nominal Dimensions			
Width	505mm	585mm	585mm
Height	360mm	485mm	485mm
Depth	320mm	350mm	350mm

Constant Research & Development may necessitate machine changes at any time.

CIRCUIT DIAGRAM

Models: 40DT, 80DT & 83 DT

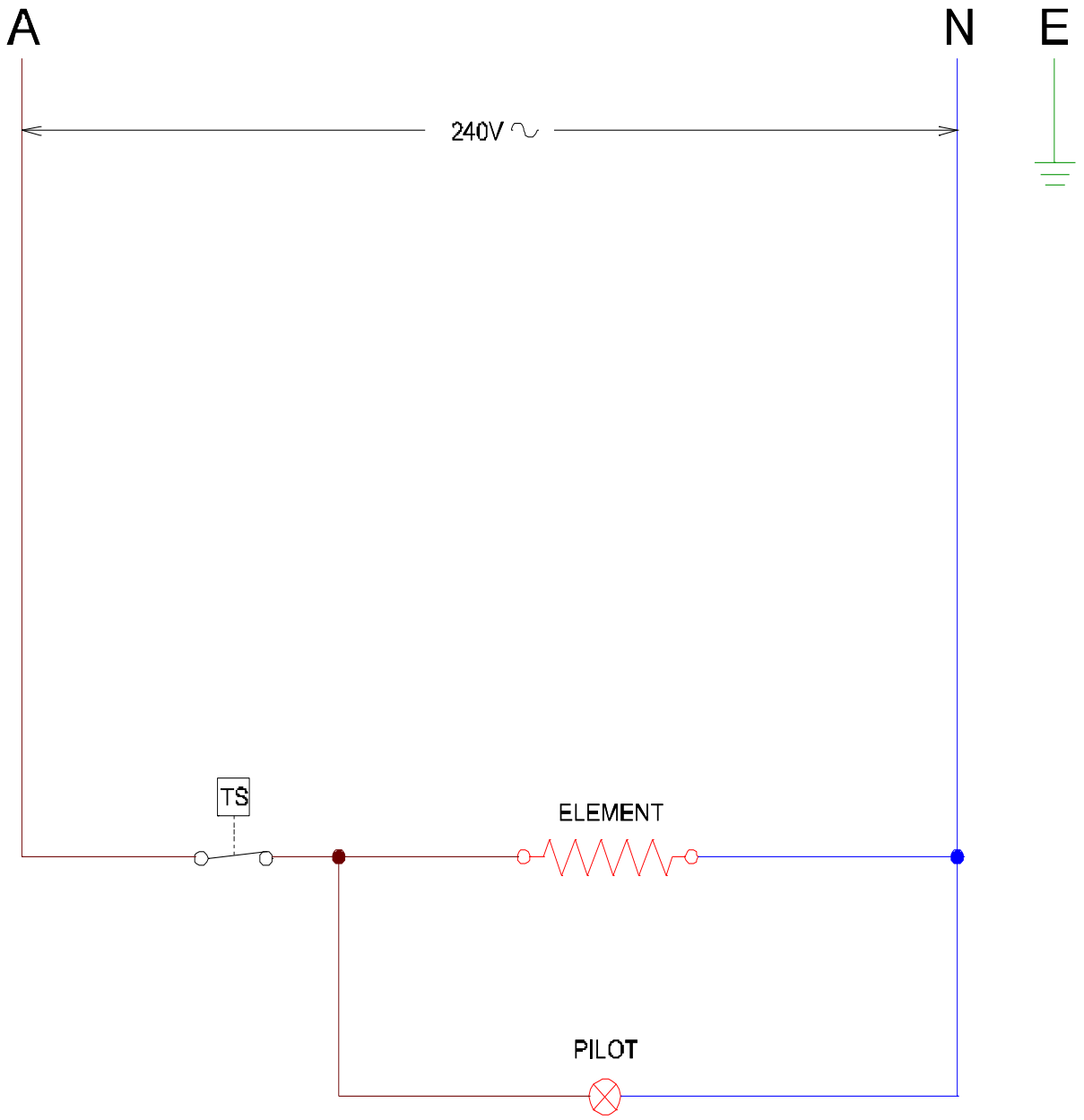

Note: This circuit diagram has been provided for reference and to assist qualified service and repair agents only. Under no circumstances should persons not suitably qualified attempt repairs to any electrical equipment.

EXPLODED DIAGRAM

40DT

ITEM NO.	QTY.	PART NO.
1	1	SS0945 - Control Box Assembly
2	1	SS0238 - Ctrl Box Bottom (40)
3	1	SS0228 - Body
4	1	SS1925 - Back Panel Assembly
5	2	SS0242 - Crumb Tray Runner
6	2	SS0948 - Side Panel Assembly
7	1	HC0042 - 40DT Element
8	1	PC0060 - Cord Clamp 10A
9	1	MS0030 - Thermometer & Retainer, Stem
10	1	MS0073 - Earth Tag Assembly
11	1	NC0011(old)- Roband Rating Plate
12	1	TS0001 - Thermostat 288° & Knob
13	1	MC0096 - Bezel
14	1	EC0010 - Pilot - 9mm Amber
15	4	SS0013 - Drawer Complete
16	1	SS0040 - Crumb Tray Assembly
17	1	EC0031 - Porcelain Steatite Terminal Block

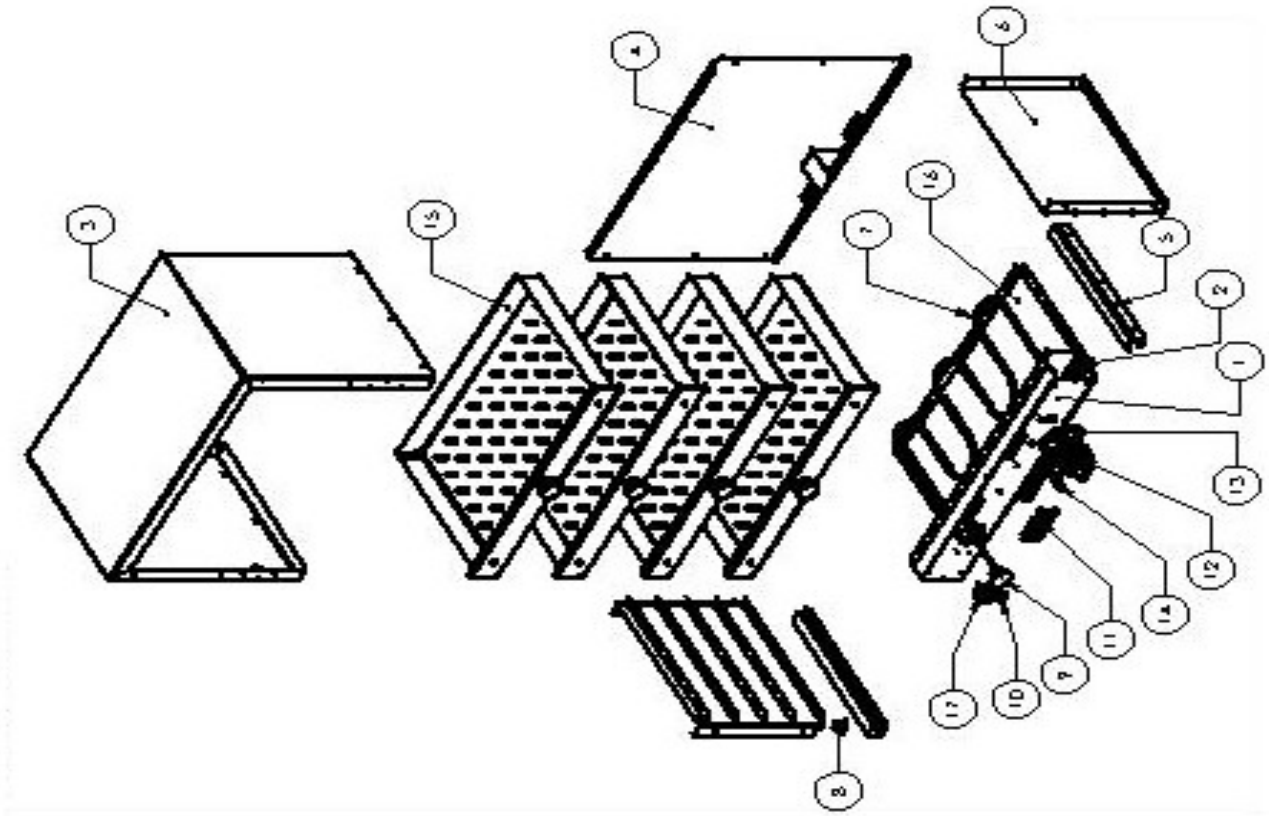

APPENDIX A

RESIDUAL CURRENT DEVICES (RCD'S)

Also known as Earth Leakage Protection systems an RCD is a protective device that automatically disconnects the active conductors of a circuit when an earth leakage current reaches a predetermined value.

Although RCD's are mandatory in domestic installations, and in the final sub-circuits of residential-type areas, the Australian Standards quote that the requirement of an RCD does "not apply to a socket-outlet…..for the connection of fixed electric cooking appliances, such as ranges, ovens or hotplates"

In installations that are neither Domestic nor Residential-type, AS/NZS 3000 2.5.3.3 states that RCD's are needed only in situations where equipment may represent an increased risk of electric shock to the user.

AS/NZS3000 2.5.2 gives the following warnings that should have been taken into consideration when an RCD circuit was installed.

> *To avoid unwanted tripping due to leakage currents and transient disturbances, care should be taken to ensure that the sum of the leakage currents of electrical equipment on the load side of an RCD is less than 1/3 of its rated residual current.*
>
> *To avoid excessive leakage current causing unwanted tripping where socket-outlets are protected by one RCD having a rated residual current not greater than 30mA, consideration should be given to the number of socket-outlets protected and the nature of electrical equipment likely to be connected to the socket-outlets.*

Tubular elements (such as those used in this unit) reaching temperatures greater than 110°C are subject to moisture absorption and therefore earth leakage current generation. Should the installation and use of this unit trip an RCD the unit will need to be run on a circuit without an RCD (as mentioned above) for approximately 30-60 minutes, after which time the elements should have dried out and the machine should function normally. If you are unable to locate a circuit without an RCD please contact your supplier, or if you prefer you can contact Roband and send the unit to one of our offices where we can run the machine on a suitable circuit free of charge (a return freight charge may apply).

WARRANTY

Every care is taken to ensure that no defective equipment leaves our factory and all goods manufactured by us are guaranteed against defective workmanship and materials for a period of 12 months from the date of purchase. Roband Australia's obligations pursuant to this express warranty being limited to the repair or replacement of the defective goods or materials, at is option and subject to the terms contained within this Warranty statement. Where relevant, glass, Teflon® and lamps are **not** included in this warranty and RCD tripping due to moisture absorption by Tubular Heating Elements is not considered a warranty fault.

Generally, all goods claimed under this warranty must be returned to the factory or an authorized service agent, freight prepaid, for inspection. All parts deemed to be defective will be replaced, however, no claims will be entertained for second hand products, or parts damaged in transport, misused or modified in any way without our approval. For machines that are not considered to be portable (e.g. food bars, rotisseries, large hotplates and some bain maries), on site warranty service will be provided in capital city metropolitan areas only. In all other locations, the customer is responsible for all travelling time/service call costs and payment for this will be required prior to the commencement of the repair. The labour costs to actually repair the fault will be met by the company.

Any repairs or replacement of defective goods or materials pursuant to this warranty, must be authorized by Roband Australia prior to any action being taken. The company reserves the right to reject a claim for warranty if it is not completely satisfied with the circumstances under which it occurred and any other costs incurred for false claims or faults due to incorrect usage etc. are the responsibility of the claimant. Roband Australia Pty Ltd nor any subsidiary company or Agent shall be liable for loss of profit or damage to other equipment and property except where it is in breach of the guarantees provided in accordance with Schedule 2 of the Competition and Consumer Act 2010 (Cth) or the applicable legislation from time to time.

The goods come with guarantees that cannot be excluded under the Australian Consumer Law (ACL). You are entitled to a replacement or refund for a major failure and for compensation for any other reasonably forseeable loss or damage. You are also entitled to have the goods repaired or replaced if they fail to be of acceptable quality and the failure does not constitute a major failure.

Generally, authorized service agents are located in all areas which have authorized distribution dealers. For the name of your nearest Australian authorised service agent, please contact:

Roband Australia Pty Ltd

1 Inman Road, Cromer, NSW 2099

Warranty Number: 1800 268 848

Phone: (02) 9971 1788 Fax: (02) 9971 1336

All other countries please contact your selling Agent.

Please complete the following details and keep this card in a safe place.

NAME_____

ADDRESS_____

MODEL No:_____SERIAL No: _____DATE PURCHASE_____

NAME OF DEALER:_____

PLEASE RETAIN THIS SECTION FOR YOUR RECORDS

DO NOT POST

ROBAND® AUSTRALIA PTY LTD

OTHER LEADING PRODUCTS AVAILABLE:

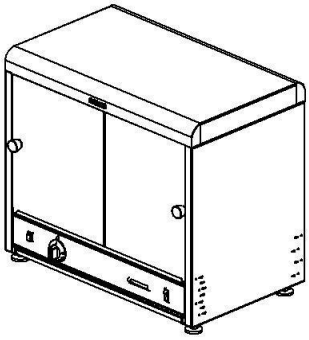

π-PLUS
PIE & FOOD WARMERS

DRINK MIXERS

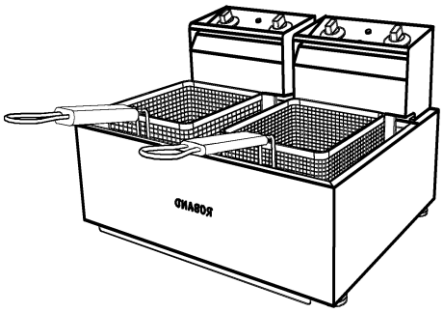

HIGH PERFORMANCE DEEP FRYERS

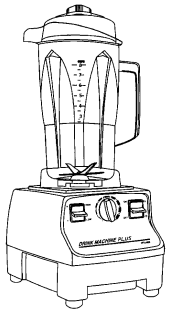

VITAMIX BLENDERS

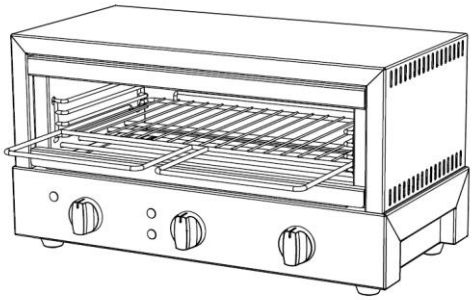

GRILLMAX TOASTERS

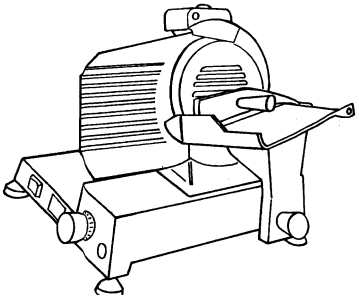

NOAW Slicers

Manufactured/Imported in Australia by:

ROBAND AUSTRALIA PTY LTD

Authorised Distributor/Agent