Manufactured By

ROBAND AUSTRALIA PTY LTD

OPERATING INSTRUCTIONS

VERTICAL TOASTERS

Models: **TC55 & TC66** **Version 6**

Includes

International models: **…-Bxx, …-Fxx, …-Gxx, …-Mxx**

Special Features:

- Multi-Slice Selection
- Advanced Control Safety Systems
- Ultra-Durable Stainless Steel Elements
- Easy Clean Crumb Tray
- Isolating Switch

These instructions cover the models of ROBAND® Vertical Toasters only. Although there are slight variances between models, the installation, operation, care and maintenance procedure is the same for all.

2/09/2016

Roband® Australia is a wholly Australian owned company and has been manufacturing quality commercial catering equipment for the food service industry for more than 50 years. Roband products are engineered and manufactured to the highest standards to provide functionality, reliability and durability, and our quality products are exported world-wide.

Included in the comprehensive Roband® range are Toasters, Fryers, Milkshake Mixers, Rotisseries, Food Display Cabinets and much more.

Roband® Australia also acts as the Australian agents for Vitamix® Blenders, Noaw® Meat Slicers, Förje® Cookware, Robalec™ Soup/Rice Warmers, Robatherm Urns, Austheat® Fryers, Dipo Induction & Autofry Machines. Roband also has its own line of commercial cookware and cutlery under the Robinox® brand name.

For a complete set of brochures please contact your nearest authorised dealer or contact Roband directly at our head office.

Roband Head Office

Sydney, Australia

Roband Australia Pty Ltd	**Tel:**	+61 2 9971 1788
1 Inman Road	**Fax:**	+61 2 9971 1336
Dee Why NSW 2099	**Email:**	sales@roband.com.au
AUSTRALIA	**Web:**	www.roband.com.au

International Agents

For additional agents please email Head Office

Belgium	Linum Europe Ph: +32 (0)56 35 92 96	**Noumea:**	Comptoir Materiel Professionnel Ph: +687 28 50 43
Fiji:	Hotel Equipment Ltd Ph: +679 672 0666	**Papua New Guinea:**	Brian Bell & Company Pty Ltd Ph: +675 325 5411
Germany	Lolsburg Ph: +49 93059878-0	**Singapore:**	Allied Foodservice Equipment Ph: +65 62525880
GREECE	K&N Engineers Ltd Ph: +30 210 520 0440	**South Africa**	Foodservice Solutions (Pty) Ltd Ph: +31 306 017 442
Hong Kong:	Chung Wah Kitchen Machine Ltd Ph: +852 2334 5411	**Thailand:**	Seven Five Distributors Co Ltd Ph: +662 866 5858
Italy	NOAW Ph: +39 0331 219723	**United Kingdom**	Metcalfe Catering Equipment Ph: +44 (0) 1766 830456
Malaysia:	Allied Food Equipment Ph: +603 9133 5833	**United Arab Emirates:**	Boncafe Middle East LLC +9714 282 8742
Maldives:	Radiant Heat Maldives Pty Ltd Ph: +960 333 4845	**United Arab Emirates:**	Nisa Trading LLC +9714 396 6132
New Zealand:	Roband New Zealand Ph: +649 274 1354	**U.S.A.**	Smart Kitchen Solutions Ph: +1 508 244 1365

© Copyright 2015 – Roband® Australia Pty Ltd

All rights reserved. No part of this work may be reproduced or copied in any form or by any means, electronic or mechanical, including photocopying or posting to a website, without the written permission of the publisher. The material contained within this document is intended entirely for instructional purposes.

CONTENTS

INTRODUCTION 1
GENERAL PRECAUTIONS 1
PACKAGING 2
COMPLIANCE 2
INSTALLATION 3
OPERATION 3
GENERAL SAFETY 5
CLEANING, CARE & MAINTENANCE 5
TROUBLESHOOTING 6
SPECIFICATIONS 6
CIRCUIT DIAGRAM 7
EXPLODED VIEW 8
EXPLODED VIEW 10
APPENDIX A 12
EC DECLARATION OF CONFORMITY 13
NOTES 14
NOTES 15
WARRANTY 16

INTRODUCTION

Congratulations on your purchase of this quality ROBAND® product. With proper care and management your new purchase will give you years of trouble free service.

By reading these instructions carefully you can ensure that this machine is used and maintained properly, helping your new investment to perform well for you now, and to continue performing in the many years to come.

GENERAL PRECAUTIONS

This machine must only be operated by qualified person(s) who are fully versed in the operating and safety instructions described in this manual. Operators should be instructed to familiarise themselves with any and all safety instructions described in this manual prior to commencement of any maintenance or service.

These machines are heating units, and as with any commercial heating unit the surfaces on these Toasters will get hot. Always be careful when near an operating Toaster, and ensure that any risk to unwary customers or staff is minimised with additional signage if necessary. Due to the obvious heat hazard Roband recommends that these units be kept out of reach of children. Do not allow children to play with these units.

These Toasters are for use with sliced bread and other bread products. The performance of this unit cannot be guaranteed for non-bread product, or for unusually thick or moist bread products.

In the case of new personnel, training is to be provided in advance. These machines should not be operated by persons (including children) with reduced physical, sensory or mental capabilities, or lack of experience or knowledge, unless they are being supervised or being instructed concerning the safe use of the appliance by a person responsible for their safety.

The machine should be disconnected from all power and allowed to cool before cleaning. Any damaged plug or cord should be replaced before further use.

These machines should not be cleaned with the use of a spray applicator, water jet or any other method except those outlined in the Cleaning & Care section of these instructions.

Roband will accept no liability if;

- Non-authorised personnel have tampered with the machine.
- The instructions in this manual have not been followed correctly.
- Non-original spare parts are used.
- The machine is not cleaned correctly, with the right product.
- There is any damage to the unit.

PACKAGING

All care is taken when packing and Roband ensures that every unit is functional and undamaged at the time of packaging.

The Package of these grills should include:

1) One Multi-Slice Toaster (appropriate model)
2) Crumb Tray
3) Packing Inserts
4) This manual

Any damage to the machine as a result of freight must be reported to the Freight Company and to the agent responsible for the dispatch of said unit within 24 hours of receipt. No claims will be accepted or entertained after this period.

COMPLIANCE

RCM:
Roband® products have been designed and manufactured to comply with any and all specifications set out by the Australian Communications and Media Authority (ACMA) in regards to Electromagnetic Compatibility. As testament to such compliance these units bear the RCM symbol.

For further information contact the Australian Communications Authority, PO Box 13112, Law Courts, Melbourne VIC 8010.

CE:
Roband® products bearing the CE compliance mark have been designed and manufactured to comply with European Standards and Directives. A copy of the CE Declaration of Conformity is located at the back of these instructions.

INSTALLATION

Remove all the packaging materials and tape, as well as any protective plastic from the machine. Clean off any glue residue left over from the protective plastic using methylated spirit.

Place the Toaster on a firm, level surface in the required position. As a precaution, it is recommended that all non-metal bench top surfaces be protected from heat with some form of insulation. A piece of masonite, sheet metal, laminate or similar material would be sufficient for this task.

Take a moment to inspect the unit to make sure that it is undamaged as a result of any freight it may have been through. Familiarise yourself with the functioning of the switches. Turn all of the switches on and off a couple of times to ensure you are comfortable with their operation.

Before connecting the Toaster to the power supply, ensure that the timer and the main On/Off switch are in the "OFF" position.

Plug the machine into a power outlet matching the plug type supplied.

Always ensure the power cable is not in contact with hot parts of the toaster when in use, and have any damaged power cord replaced immediately.

National Standards exist outlining the positioning, spacing and ventilation requirements when installing new appliances. These Standards should be consulted and new equipment should be installed accordingly. In any situation where specifications allow a distance of less than 100mm we would still recommend that a well-ventilated air gap of not less than 100mm be maintained. If the machine is near particularly heat-sensitive materials common sense should be employed in determining sufficient distancing.

We recommend the use of an RCD (Residual Current Device) rated at not less than 30mA for circuit protection when using these units. Note that if one RCD is used to protect multiple socket outlets, the RCD shall be appropriately rated so as to allow up to 30mA from these machines alone.

OPERATION

In all models the timer controls the elements. These toasters can be used to toast 2 or “all” (5 slices for TC55, 6 for the TC66) slices of toast. The rotary switch located on the front of the machine labelled accordingly controls the number of slices. The slots for cooking 2 slices are marked on the top of the toaster.

1. Turn the machine on by rotating the selector switch into the “On” position. The green pilot light should become illuminated to indicate that the power is on.
2. Select the number of slices you wish to cook using the selector switch as described above.
3. Set the desired cooking time with the timer. The amber pilot light will illuminate indicating that cooking is in progress. When the set time has elapsed the timer will sound a “Ding” and switch off the elements. At this time the amber pilot light will also be switched off.
4. Depress and hold the handle to remove the cooked toast.

As a guide, a cooking time of around 3 minutes should suffice if the toaster is cold and 2 minutes if it is hot (dependent on the type of bread used). Experience will dictate the most suitable cooking time. For more consistent results a warm up period without cooking is recommended.

When turning the slice selector to **more** slices (from 2 to all slices) the unit should be run for at least 5 minutes **without** toast to equalise the element temperatures. When switching to **less** slices it is recommended that the unit be left to cool down for at least 10 minutes, or alternatively that one extra slice be used to act as a barrier to any heat from elements which have not yet had time to cool.

Toasting with fresh bread (with a high moisture content) will adversely affect the quality of toast produced and will result in uneven toasting. Always toast with day old, non-refrigerated bread to achieve best results.

NOTE: It is important that when using the toaster the correct setting is used for the number of slices. For example if only 2 slices are put in the toaster but the toaster is set on all slices the toast will burn on one side. The reason for this is that the toast acts as an element separator and each slice being cooked should only be heated by the *one* element on either side.

SAFETY

GENERAL SAFETY

This machine contains no user-serviceable parts. Roband Australia, one of our agents, or a similarly qualified person(s) should carry out any and all repairs. Any repair person(s) should be instructed to read the Safety warnings within this manual before commencing work on these units.

Steel cutting processes such as those used in the construction of this machine result in sharp edges. Whilst any such edges are removed to the best of our ability it is always wise to take care when contacting any edge. Particular care should be taken when panels are removed (eg during servicing) as this may expose sharp edges.

Do not remove any cover panels that may be on the machine.

This unit can get very hot, ensure everyone is aware that the machine is operating and take care to avoid contact with hot surfaces. Hot surfaces should be left well ventilated with an air gap of at least 100mm, though common sense should be used if the machine is near heat-sensitive materials.

Always ensure the power cable is not in contact with hot parts of the machine when in use. Ensure that any damaged power cord is replaced before further use.

Do not clean this unit with the aid of a Spray Applicator or Water Jet.

Keep out of reach of children or the inept.

CLEANING, CARE & MAINTENANCE

Attention to regular care and maintenance will ensure long and trouble free operation of your toaster. Although scheduled servicing is not required we do recommend you adopt a program of regular maintenance to ensure that the Toaster is clean and functional and to avoid inadvertently damaging the unit.

- Ensure the power is off and the toaster is cool before attempting to clean any part of the machine.
- Wipe the toaster down with warm soapy water using a **damp** sponge or cloth. **Do not** immerse the toaster in water or allow the ingress of water into the ventilation holes or controls. **Do not** clean this unit with the use of a water jet.
- Daily cleaning of the crumb tray is essential. The crumb tray may be removed by sliding it out from the toaster. The crumb tray should be emptied and washed with warm soapy water.

- It is possible to turn the machine up side down and shake it gently in order to remove any remaining crumbs.

- When returning the unit to its operating position after cleaning, ensure once again that the power cord cannot contact hot surfaces of the machine.

WARNING: Although every care is taken during manufacture to remove all sharp edges, care should be taken when cleaning and handling the toaster to avoid injury.

CAUTION: Some cleaning agents can damage stainless steel, usually through prolonged use. For this reason we recommend cleaning with soapy water. Any damage to the unit through the use of harsh or improper cleaning agents is entirely the fault of the user.

TROUBLESHOOTING

If the toaster does not heat up check the following points before calling for service.

- ✓ The toaster is plugged in correctly and the power is switched on.
- ✓ The selector switch is in the “on” position.
- ✓ The power point is not faulty.
- ✓ The Slice Selector and timer are in the correct relative position.
- ✓ The Timer knob is not loose or broken, rendering the switch inoperable.
- ✓ Check Appendix A on page 11 of this manual on RCD’S

Only after all these points have been checked should you call for service.

SPECIFICATIONS

Model	Power Source	Power Consumption	Nominal Dimensions		
			Width	Height	Depth
TC55	220-240 Volts AC	2015 – 2400W	420mm	311mm	264mm
TC66	220-240 Volts AC	2350 - 2800W	420mm	311mm	264mm

CIRCUIT DIAGRAM

All Models

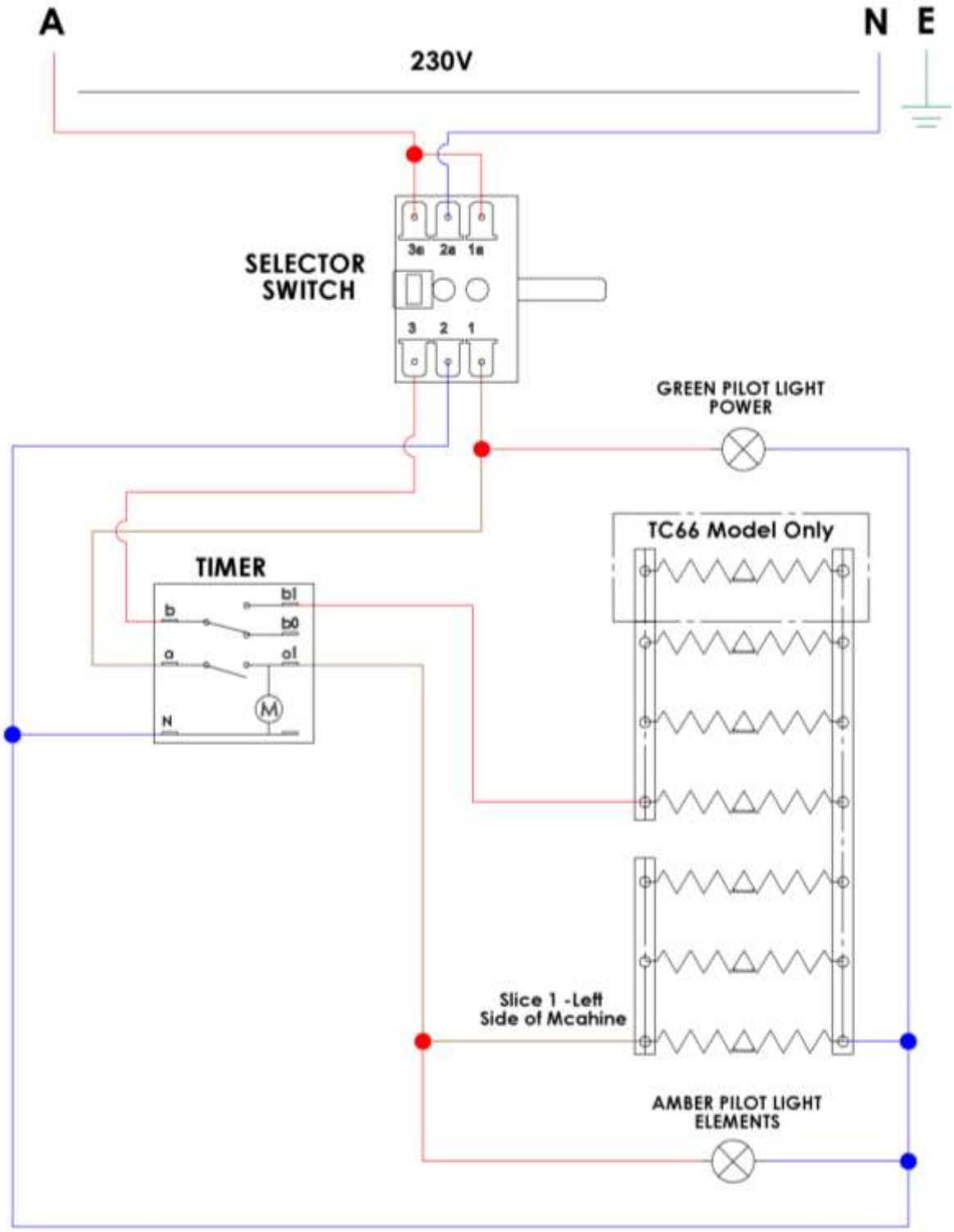

NOTE: This circuit diagram has been provided for reference and to assist qualified service and repair agents only. Under no circumstances should persons not suitably qualified attempt repairs to any electrical equipment.

EXPLODED VIEW

Model: TC55 V6

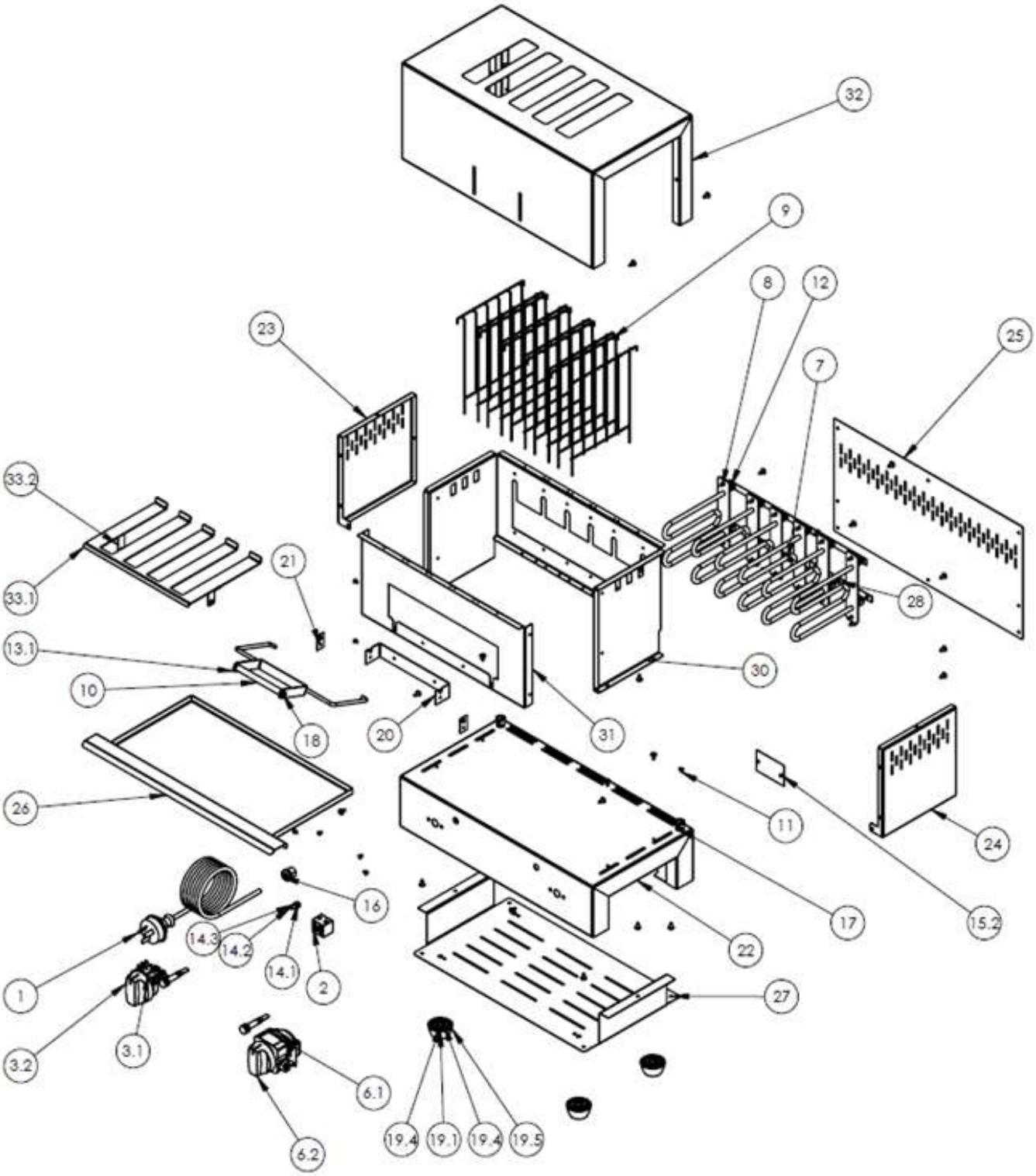

ITEM NO.	PART NUMBER	DESCRIPTION	QTY
1	EC0019	Plug & Cord Black 10A	1
2	EC0031	Terminal Block - Porcelain	1
3	ES0258	Rotary Switch & Al Knob	1
3.1	EC0209	Switch Rotary - 3 Pos - 3 Pole	1
3.2	MC0846	Roband Knob - 6mm - Aluminium	1
4	ES0264	Amber Pilot,'O' Ring & Nut	1
5	ES0265	Green Pilot, 'O' Ring & Nut	1
6	ES0286	6-Minute Electrical Timer (Invensys) and Aluminium Knob	1
6.1	EC0412	Timer Electric 6min Including Bell (Invensys)	1
6.2	MC0846	Roband Knob - 6mm - Aluminium	1
7	HC0133	Element - 400W 240V	6
8	MC0062	Screw - 8G x 3/8" self tapper, hardened, Torx	40
9	MC0070	Wire Guide - Toast	10
10	MC0085	Handle - Unplated	1
11	MC0283	Rivet - 73MS 4-1 Truss Head	8
12	MC0565	Screw M4 x 5 Button Head Torx ZP	12
13	MS0302	Lever Assembly - Plated	1
13.1	SS0139	Handle Bracket	1
13.2	MC0512	Lever Wire	1
14	MS0388	Earth Screw Assembly	1
14.1	MC0278	Washer - 3/16 Internal Star Shakeproof	1
14.2	MC0704	Screw - M5 x 10 - SS	1
14.3	MC0699	Nut - M5 Stainless	1
15	NS0001	Rating Plate Assembly - Plain	1
15.1	NC0005	Rating Plate	1
15.2	MC0283	Rivet - 73MS 4-1 Truss Head SS	2
16	PC0060	Cord Clamp - 10A	1
17	PC0139	Bush - Nylon Ø0.5inch	2
18	PC0180	Handle Insulating Bush	2
19	PS0129	Foot & Foot Cap Set (includes M6x16 Screws)	1
19.1	MC0405	Screw M6 x 16 Button Head Socket SS	4
19.2	PC0393	Appliance Foot Bung	4
19.3	MC0417	Nut M6 Steel Hex ZP	4
19.4	MC0902	Washer - 3/16 Internal Star Shakeproof	4
19.5	PC0392	Appliance Foot	4
20	SS0143	Lever Bracket	1
21	SS2155	Lever Keeper	2
22	SS2853	Control Box	1
23	SS2855	LH Side Panel	1
24	SS2856	RH Side Panel	1
25	SS2857	Rear Panel	1
26	SS2858	Crumb Tray	1
27	SS2859	Bottom Panel	1
28	SS2866	Busbar	2
29	SS1213	Busbar	1
30	SS2868	Rear Guts	1
31	SS2869	Front Guts	1
32	SS2871	Main Body	1
33	WS0015	Comb Assembly	1
33.1	SS2870	Comb	1
33.2	SS2863	Comb Bracket	2

EXPLODED VIEW

Model: TC66 V6

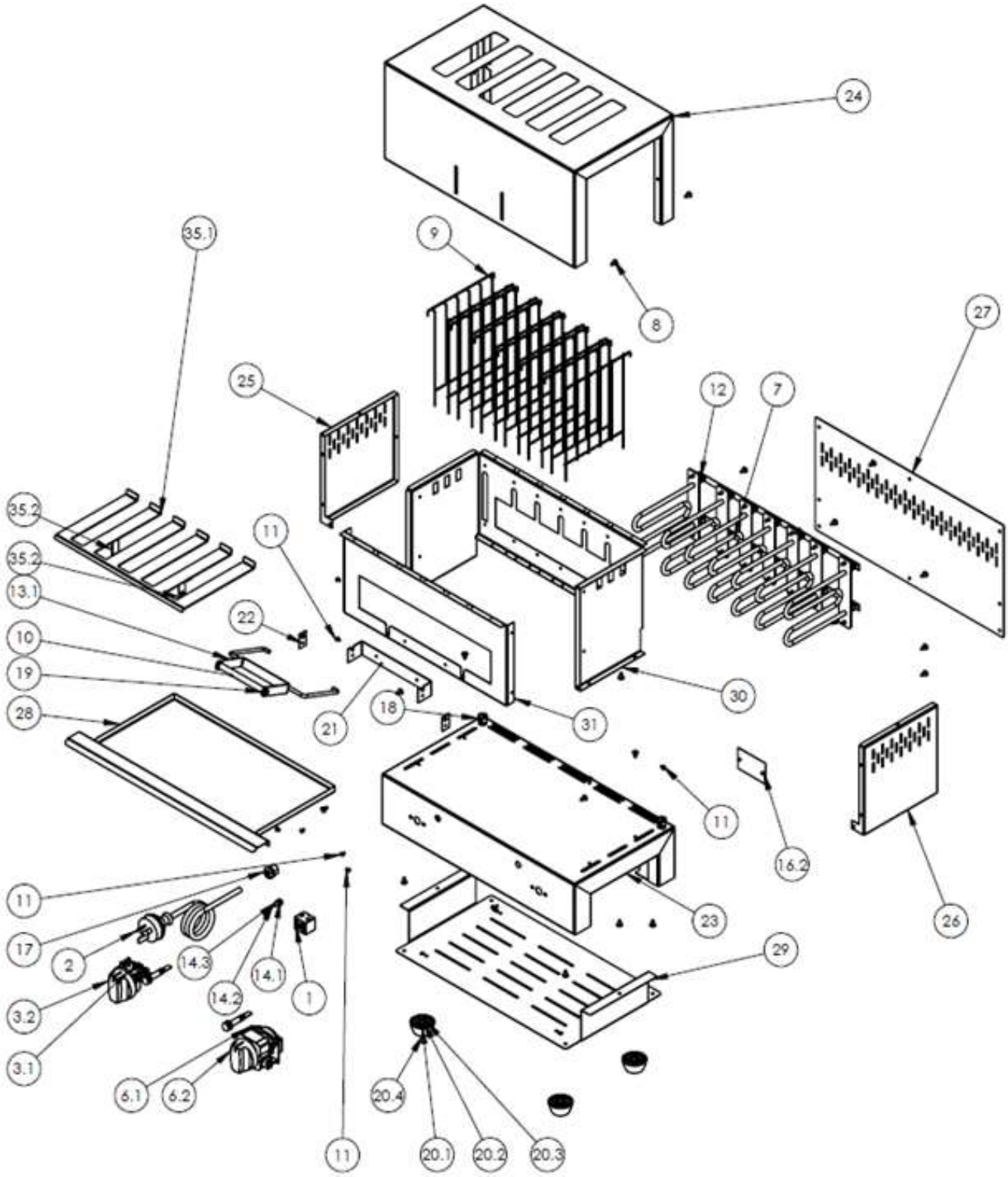

ITEM NO.	PART NUMBER	DESCRIPTION	QTY
1	EC0031	Terminal Block - Porcelain	1
2	EC0306	Plug & Cord - Black Elastomer 15Amp	1
3	ES0258	Rotary Switch & Al Knob	1
3.1	EC0209	Switch Rotary - 3 Pos - 3 Pole	1
3.2	MC0846	Roband Knob - 6mm - Aluminium	1
4	ES0264	Amber Pilot,'O' Ring & Nut	1
5	ES0265	Green Pilot, 'O' Ring & Nut	1
6	ES0286	6-Minute Electrical Timer (Invensys) and Aluminium Knob	1
6.1	EC0412	Timer Electric 6min Including Bell (Invensys)	1
6.2	MC0846	Roband Knob - 6mm - Aluminium	1
7	HC0133	Element - 400W 240V	7
8	MC0062	Screw - 8G x 3/8" self tapper, hardened, Torx	42
9	MC0070	Wire Guide - Toast	12
10	MC0085	Handle - Unplated	1
11	MC0283	Rivet - 73MS 4-1 Truss Head	8
12	MC0565	Screw M4 x 5 Button Head Torx ZP	14
13	MS0075	Lever Assembly	1
13.1	SS0139	Handle Bracket	1
13.2	MC0007	Lever Wire	1
14	MS0388	Earth Screw Assembly	1
14.1	MC0278	Washer - 3/16 Internal Star Shakeproof	1
14.2	MC0704	Screw - M5 x 10 - SS	1
14.3	MC0699	Nut - M5 Stainless	1
15	NC0043	15A or Greater Label	1
16	NS0001	Rating Plate Assembly - Plain	1
16.1	NC0005	Rating Plate	1
16.2	MC0283	Rivet - 73MS 4-1 Truss Head SS	2
17	PC0061	Cord Clamp 15A	1
18	PC0139	Bush - Nylon Ø0.5inch	2
19	PC0180	Handle Insulating Bush	2
20	PS0129	Foot & Foot Cap Set (includes M6x16 Screws)	1
20.1	MC0405	Screw M6 x 16 Button Head Socket SS	4
20.2	MC0417	Nut M6 Steel Hex ZP	4
20.3	MC0902	Washer - 3/16 Internal Star Shakeproof	4
20.4	PC0392	Appliance Foot	4
20.5	PC0393	Appliance Foot Bung	4
21	SS0143	Lever Bracket	1
22	SS2155	Lever Keeper	2
23	SS2853	Control Box	1
24	SS2854	Main Body	1
25	SS2855	LH Side Panel	1
26	SS2856	RH Side Panel	1
27	SS2857	Rear Panel	1
28	SS2858	Crumb Tray	1
29	SS2859	Bottom Panel	1
30	SS2860	Rear Guts	1
31	SS2861	Front Guts	1
32	SS0145	Busbar	1
33	SS2865	Busbar	1
34	SS2866	Busbar	1
35	WS0014	Comb Assembly	1
35.1	SS2862	Comb	1
35.2	SS2863	Comb Bracket	2

APPENDIX A

RESIDUAL CURRENT DEVICES (RCD'S)

Also known as Earth Leakage Protection systems an RCD is a protective device that automatically disconnects the live conductors of a circuit when an earth leakage current reaches a predetermined value.

Australian and International Standards detail when and where RCD's are to be used in electrical installations, but common practice in many countries is to use a 30mA RCD in general commercial applications. This is typically done because 30mA RCD's are readily available and are used in domestic installations.

For Commercial installations, and for socket-outlets providing power to commercial heating equipment (Toasters, Bains Marie, Grillers), 30mA RCD's are typically unsuitable unless they are protecting only one device. Higher rated RCD's should be considered if protecting multiple socket-outlets, giving appropriate consideration to the type of equipment being protected.

AS/NZS3000 2.5.2 gives the following warnings that should have been taken into consideration when an RCD circuit was installed.

> *To avoid unwanted tripping due to leakage currents and transient disturbances, care should be taken to ensure that the sum of the leakage currents of electrical equipment on the load side of an RCD is less than 1/3 of its rated residual current.*
>
> *To avoid excessive leakage current causing unwanted tripping where socket-outlets are protected by one RCD having a rated residual current not greater than 30mA, consideration should be given to the number of socket-outlets protected and the nature of electrical equipment likely to be connected to the socket-outlets.*

Tubular elements (such as those used in this unit) reaching temperatures greater than 110°C are subject to moisture absorption and therefore earth leakage current generation. Should the installation and use of this unit trip an RCD the unit will need to be run on a circuit without an RCD for approximately 30-60 minutes, after which time the elements should have dried out and the machine should function normally. If you are unable to locate a circuit without an RCD please contact your supplier or contact Roband or our Agent for alternative suggestions.

ROBAND AUSTRALIA PTY LTD

Declaration of Conformity

We the undersigned,

Manufacturer	**Roband Australia Pty Ltd**
Address	**1 Inman Road Cromer NSW 2099**
Country	**Australia**
Authorised Representative in EU	**Metcalfe Catering Equipment Ltd**
Address	**Haygarth Park, Blaenau, Ffestiniog, Gwynedd North Wales LL41 3Pf,**
Country	**United Kingdom**

Certify and declare under our sole responsibility the following equipment,

TC55, TC66

Conforms with the requirements of the following EU Directives,

EMC Directive 2004/108/EC
Low Voltage Directive 2006/95/EC
RoHS Directive 2011/65/EU
Machinery Directive, 2006/42/EC

Based upon the following specifications applied

EN55014.2:1997 Electromagnetic Compatibility. Requirements for household appliances, electric tools and similar apparatus. Immunity.
EN60335.1:2012 Household and similar electrical appliances - Safety.
EN60335.2.48:2008 Household and similar electrical appliances – Safety – Particular requirements for commercial electric grillers and toasters.

Signed:

Printed Name Shane Marshall
Position in organisation *Engineering Manager*
Roband Australia Pty Ltd

Date: **15th April 2016**

NOTES

This page has been intentionally left blank

NOTES

This page has been intentionally left blank

WARRANTY

Every care is taken to ensure that no defective equipment leaves our factory and all goods manufactured by us are guaranteed against defective workmanship and materials for a period of 12 months from the date of purchase. Roband Australia's obligations pursuant to this express warranty being limited to the repair or replacement of the defective goods or materials, at is option and subject to the terms contained within this Warranty statement. Where relevant, glass, Teflon® and lamps are **not** included in this warranty and RCD tripping due to moisture absorption by Tubular Heating Elements is not considered a warranty fault.

Generally, all goods claimed under this warranty must be returned to the factory or an authorized service agent, freight prepaid, for inspection. All parts deemed to be defective will be replaced, however, no claims will be entertained for second hand products, or parts damaged in transport, misused or modified in any way without our approval. For machines that are not considered to be portable (e.g. food bars, rotisseries, large hotplates and some bain maries), on site warranty service will be provided in capital city metropolitan areas only. In all other locations, the customer is responsible for all travelling time/service call costs and payment for this will be required prior to the commencement of the repair. The labour costs to actually repair the fault will be met by the company.

Any repairs or replacement of defective goods or materials pursuant to this warranty, must be authorized by Roband Australia prior to any action being taken. The company reserves the right to reject a claim for warranty if it is not completely satisfied with the circumstances under which it occurred and any other costs incurred for false claims or faults due to incorrect usage etc. are the responsibility of the claimant. Roband Australia Pty Ltd nor any subsidiary company or Agent shall be liable for loss of profit or damage to other equipment and property except where it is in breach of the guarantees provided in accordance with Schedule 2 of the Competition and Consumer Act 2010 (Cth) or the applicable legislation from time to time.

The goods come with guarantees that cannot be excluded under the Australian Consumer Law (ACL). You are entitled to a replacement or refund for a major failure and for compensation for any other reasonably forseeable loss or damage. You are also entitled to have the goods repaired or replaced if they fail to be of acceptable quality and the failure does not constitute a major failure.

Generally, authorized service agents are located in all areas which have authorized distribution dealers. For the name of your nearest Australian authorised service agent, please contact:

Roband Australia Pty Ltd

1 Inman Road, Cromer, NSW 2099

Warranty Number: 1800 268 848

Phone: (02) 9971 1788 Fax: (02) 9971 1336

All other countries please contact your selling Agent.

Please complete the following details and keep this card in a safe place.

NAME_____

ADDRESS_____

MODEL No:_____SERIAL No: _____DATE PURCHASE_____

NAME OF DEALER:_____

PLEASE RETAIN THIS SECTION FOR YOUR RECORDS

DO NOT POST

ROBAND® AUSTRALIA PTY LTD

OTHER LEADING PRODUCTS AVAILABLE:

Sycloid Toaster

DRINK MIXERS

HIGH PERFORMANCE DEEP FRYERS

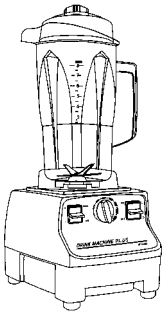

VITAMIX BLENDERS

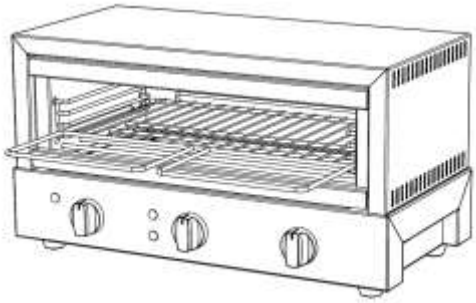

GRILLMAX TOASTERS

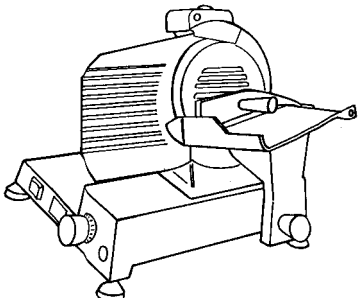

NOAW Slicers

Manufactured/Imported in Australia by:

ROBAND AUSTRALIA PTY LTD

Authorised Distributor/Agent