Vita-Prep® 3

Model: VM10089

Unmatched Performance in Commercial Kitchens

Professional chefs and culinary schools around the world trust the Vita-Prep® 3 for exceptional power, versatility and performance. From chopping delicate ingredients to blending tough purees, the Vita-Prep 3 is the only tool that's durable and capable of perfectly chopping, grinding, and blending it all.

VM10089 pictured

Features

- Powerful ~3 peak output HP motor delivers unmatched performance when pureeing, grinding, chopping and more
- Advanced cooling fan for optimum reliability during peak hours of operation
- 2.0 litre high-impact clear container with Wet blade assembly and lid
- Patented Tamper stick allows for control and easy processing of dense ingredients

Perfectly chop ingredients

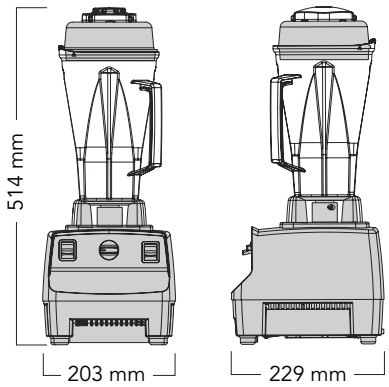

Specifications

Motor:	~3 peak output HP motor
Electrical:	Standard single phase 10 Amp plug, 220-240 V, 50/60 Hz, 1300 - 1500 Watts (load dependent)
Includes:	2.0 litre high impact, clear/stackable container, complete with Wet blade assembly, lid, Tamper stick and base

0511

All dimensions are nominal only.
Covered by 3 years warranty (1 year parts and labour followed by 2 years parts only).
Conditions apply. Refer to our Terms & Conditions of Trade.

Exclusive Distributor: ROBAND AUSTRALIA PTY LTD