Manufactured By

ROBAND AUSTRALIA PTY LTD

OPERATING INSTRUCTIONS

DRINK MIXERS

Models: **DM21 - Version 3**

Includes

Colours: **B, C, G, M, S, R, W,**

International models: **…-Gxx and …-Fxx**

Special Features:

- Cup activated switch
- Stainless steel mixing shaft and beaters
- 13,000 RPM motor

These instructions cover the models of ROBAND® Drink Mixers Assemblies only. Although there are slight variances between models, the installation, operation, care and maintenance procedure is the same for all.

10/08/2017

Roband® Australia is a wholly Australian owned company and has been manufacturing quality commercial catering equipment for the food service industry for more than 50 years. Roband products are engineered and manufactured to the highest standards to provide functionality, reliability and durability, and our quality products are exported world-wide.

Included in the comprehensive Roband® range are Toasters, Fryers, Milkshake Mixers, Rotisseries, Food Display Cabinets and much more.

Roband® Australia also acts as the Australian agents for Vitamix® Blenders, Noaw® Meat Slicers, Förje® Cookware, Robalec™ Soup/Rice Warmers, Robatherm Urns, Austheat® Fryers, Dipo Induction & Autofry Machines. Roband also has its own line of commercial cookware and cutlery under the Robinox® brand name.

For a complete set of brochures please contact your nearest authorised dealer or contact Roband directly at our head office.

Roband Head Office Sydney, Australia		
Roband Australia Pty Ltd	**Tel:**	+61 2 9971 1788
1 Inman Road	**Fax:**	+61 2 9971 1336
Dee Why NSW 2099	**Email:**	sales@roband.com.au
AUSTRALIA	**Web:**	www.roband.com.au

International Agents

For additional agents please email Head Office

Belgium	Linum Europe Ph: +32 (0)56 35 92 96	**Noumea:**	Comptoir Materiel Professionnel Ph: +687 28 50 43
Fiji:	Hotel Equipment Ltd Ph: +679 672 0666	**Papua New Guinea:**	Brian Bell & Company Pty Ltd Ph: +675 325 5411
Germany	Lolsburg Ph: +49 93059878-0	**Singapore:**	Allied Foodservice Equipment Ph: +65 62525880
GREECE	K&N Engineers Ltd Ph: +30 210 520 0440	**South Africa**	Foodservice Solutions (Pty) Ltd Ph: +31 306 017 442
Hong Kong:	Chung Wah Kitchen Machine Ltd Ph: +852 2334 5411	**Thailand:**	Seven Five Distributors Co Ltd Ph: +662 866 5858
Italy	NOAW Ph: +39 0331 219723	**United Kingdom**	Metcalfe Catering Equipment Ph: +44 (0) 1766 830456
Malaysia:	Allied Food Equipment Ph: +603 9133 5833	**United Arab Emirates:**	Boncafe Middle East LLC +9714 282 8742
Maldives:	Radiant Heat Maldives Pty Ltd Ph: +960 333 4845	**United Arab Emirates:**	Nisa Trading LLC +9714 396 6132
New Zealand:	Roband New Zealand Ph: +649 274 1354	**U.S.A.**	Smart Kitchen Solutions Ph: +1 508 244 1365

© Copyright 2015 – Roband® Australia Pty Ltd

All rights reserved. No part of this work may be reproduced or copied in any form or by any means, electronic or mechanical, including photocopying or posting to a website, without the written permission of the publisher. The material contained within this document is intended entirely for instructional purposes.

CONTENTS

INTRODUCTION 1
GENERAL PRECAUTIONS 1
PACKAGING 2
COMPLIANCE 2
INSTALLATION 3
OPERATION 4
OPERATIONAL TIPS 5
GENERAL SAFETY 6
CLEANING, CARE & MAINTENANCE 6
TROUBLESHOOTING 7
SPECIFICATIONS 7
CIRCUIT DIAGRAM 8
SPARE PARTS 9
NOTES 10
DECLARATION OF CONFORMITY 11
WARRANTY 12

INTRODUCTION

Congratulations on your purchase of this quality ROBAND® product. With proper care and management your new purchase will give you years of trouble free service.

By reading these instructions carefully you can ensure that this machine is used and maintained properly, helping your new investment to perform well for you now, and to continue performing in the many years to come.

GENERAL PRECAUTIONS

This machine must only be operated by qualified person(s) who are fully versed in the operating and safety instructions described in this manual. Servicepersons should be instructed to familiarise themselves with any and all safety instructions described in this manual prior to commencement of any maintenance or service.

In the case of new personnel, training is to be provided in advance. These machines should not be operated by persons (including children) with reduced physical, sensory or mental capabilities, or lack of experience or knowledge, unless they have been given supervision or instruction concerning the safe use of the appliance by a person responsible for their safety.

When moving the mixer, only hold or lift it by the body itself. **Do not carry or move the mixer by holding the motor spindle or the motor housing**. The motor spindle is aligned with a tolerance of 0.025mm before leaving the factory to ensure trouble free mixing and long motor bearing life.

The performance of this unit cannot be guaranteed for operational use outside its design parameters.

The machine should be disconnected from all power before cleaning.

Roband will accept no liability if;

Non-authorised personnel have tampered with the machine.

The instructions in this manual have not been followed correctly.

Non-original spare parts are used.

The machine is not cleaned correctly, with the right product.

There is any damage to the unit.

The machine has been modified in any way.

PACKAGING

All care is taken when packing and Roband ensures that every unit is functional and undamaged at the time of packaging.

The Package of this Drink Mixer should include:

1. One Drink Mixer (appropriate model)
2. One Stainless Steel Mixing Cup
3. This Manual

Any damage to the machine as a result of freight must be reported to the Freight Company and to the agent responsible for the despatch of said unit within 24 hours of receipt. No claims will be accepted or entertained after this period.

COMPLIANCE

RCM:
Roband® products have been designed and manufactured to comply with any and all specifications set out by the Australian Communications and Media Authority (ACMA) in regards to Electromagnetic Compatibility. As testament to such compliance these units bear the RCM symbol.

For further information contact the Australian Communications Authority, PO Box 13112, Law Courts, Melbourne VIC 8010.

CE:
Roband® products bearing the CE compliance mark have been designed and manufactured to comply with European Standards and Directives. A copy of the CE Declaration of Conformity is available at request.

ACSS (Advance Control Safety System) – Australia Only:

The ACSS framework is a stringent and specific set of voluntary requirements aimed at the electrical safety, reliability and longevity of equipment used in the foodservice industry.

The ACSS framework has been developed as both a guide to the engineering and development of products as well as a guarantee to consumers that Roband equipment bearing this mark not only meets the requirements of the Australian Standards, they exceed them.

A unit bearing the ACSS mark is your guarantee that you are purchasing a machine built to far exceed the Australian standards (and most International Standards). The unit has been designed to be safer, particularly from an electrical aspect, and last longer than similar units on the market today.

INSTALLATION

Remove all the packaging materials and tape, as well as any protective plastic from the machine. Clean off any glue residue left over from the protective plastic or tape using methylated spirit.

Place the mixer on a firm, level surface in the required position.

The DM21W, DM21R, DM21B & DM21C models plug into a standard, single phase, 10A Australian (Type I) power point.

The "-G" models plug into a standard 13A United Kingdom (Type G) power point.

The "-F" models plug into a standard 16A European (Type E or F) power point.

We recommend the use of an RCD (Residual Current Device) rated at not less than 30mA for circuit protection when using these units.

OPERATION

The mixer plugs into a standard, single phase power point. On the top of the mixer is an ON OFF / Speed control switch.

The unit is operated by a combination of two mechanisms; the control switch and the activating “switch rod”. Select the desired setting on the Control Switch by pressing the switch to either the “I” position (low speed) or the “II” position (high speed).

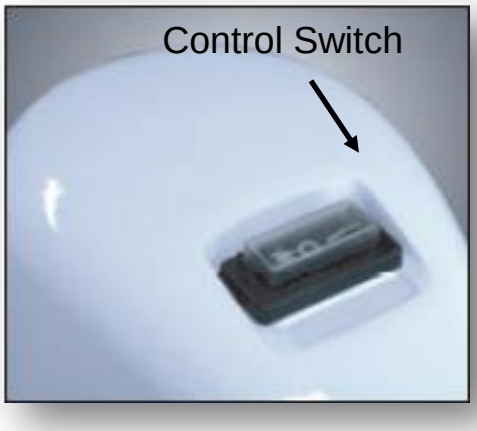

Placing the rim of the supplied mixing cup or a standard size 710mL (24 Fl.oz.) milk shake cup behind the top cup retainer (switch rod) and resting the bottom of the cup on the cup support will then start the mixing action.

It is the vertical movement of the “switch rod” (also known as the Actuator) that activates the mixing beater. Please note that it is important to ensure the cup rim is hooked behind the point of the shaft so that the cup will not slip off the actuating rod. (see picture)

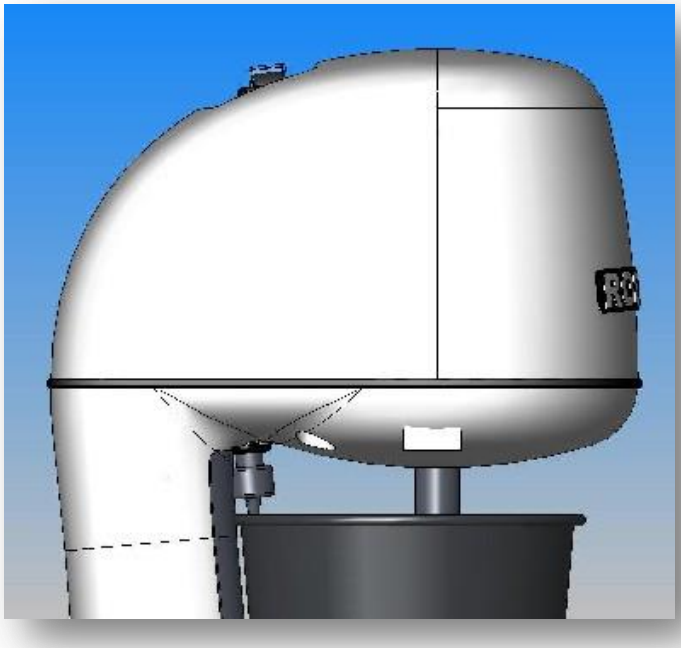

After the desired mixing duration, remove the cup by first lifting it then pulling it down and away from the motor spindle. The mixer is designed for a fluid volume of 180ml to 210ml. Increasing this volume could cause spillage, which may migrate into the switch, leading to possible electrical problems.

If small cups are to be used they will not be tall enough to activate the micro switch. In this case a “collar” is required for the mixing process. (Please contact your supplier for information on obtaining a collar if required). *Be very cautious when using a Collar*, as these tend to dent easily. A dent in a collar can make a sharp point on the bottom edge, which can chip the paint on the unit if it falls off the cup.

OPERATIONAL TIPS

MAKING A THICK, FROTHY SHAKE

For best results with the new Saturn Beater©, set the Control switch to "I" (Low speed). On low speed, the specially designed Saturn Beater will pull even more air into the milk and create a smoother, creamier drink using smaller volumes of ingredients.

Using an internationally registered design engineered to maximise the aeration of milkshakes and thick shakes, the Saturn Beater represents the best technology available in milkshake preparation. This deceptively simple component ensures that profits are maximised by getting more volume with less milk.

Notes to user: These units are not blenders and will not make thick shakes from chunks of frozen ice cream. If ice cream is used it is common for the beater to bite into the ice cream and drag it around, leaving a large amount unblended and increasing the chances of spillage. To make a thick shake it is required that **soft serve** or somewhat melted ice cream be used.

An important tip to remember is that the colder the milk used, the thicker the shake. Additionally, Light milk and Skim milk will froth more than full-cream milk.

ALTERNATE MIXING HEAD

While we recommend using the Saturn beater, we have included the parts for an alternate mixing head for those customers who feel they would get better results with a more typical beater assembly. On the right is a picture of how the parts are assembled on the mixer shaft.

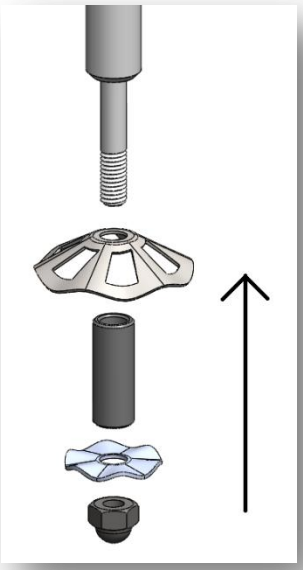

SAFETY

GENERAL SAFETY

This machine contains no user-serviceable parts. Roband Australia, one of our agents, or a similarly qualified person(s) should carry out any and all repairs.

Steel cutting processes such as those used in the construction of this machine result in sharp edges. Whilst any such edges are removed to the best of our ability it is always wise to take care when contacting any edge.

Do not remove any cover panels that may be on the product.

Do not use anything other than a recommended cup or collar to activate the switch.

It may be possible to actuate the switch while cleaning, for this reason we advise that you turn of the power to the mixer before commencing cleaning.

Never place your hand or any other object into the cup while in operation.

CLEANING, CARE & MAINTENANCE

Clean the motor spindle by placing warm water in the cup and then mixing. The rest of the machine can be cleaned after first switching off the speed control switch then disconnecting the power cord from the wall socket. The mixer can then be wiped down with a warm **damp** cloth. Pay particular attention to keeping the area around the switch rod and the switch rod itself clean. Do not immerse mixer in water. Keep the motor spindle, where it enters the motor housing, and the activating switch free from milk, flavouring and other drink residue. Do not use a water jet system for cleaning this appliance.

NEVER USE CHLORIDE BASED CLEANERS or “Sanitizers” on these machines. The Chloride ions will damage the bodies, resulting in oxidation of the aluminium and lifting/”bubbling” of the paint.

The Drink Mixer should be cleaned after each use.

Do not under any circumstances immerse the mixer in water.

Some cleaning agents can damage stainless steel and painted surfaces, usually through prolonged use. For this reason we recommend cleaning with soapy water. Any damage to the unit through the use of harsh or improper cleaning agents is entirely the responsibility of the user.

TROUBLESHOOTING

If the Drink Mixer does not function, please check the following points before calling for service.

- ✓ The machine is plugged in correctly and the power switched on.
- ✓ **The IEC plug is pushed firmly into its socket** – relocating the unit or cumulative vibrations may cause the socket to become loose – turn the machine on its side and push the IEC inlet plug firmly into the socket inside the base.
- ✓ The on off / speed control switch has been activated.
- ✓ The power point is not faulty.
- ✓ The cup actuates the switch correctly
- ✓ Select the alternative speed setting.

SPECIFICATIONS

All DM21 Models	
Power source	220-240 Volts AC
Power	150 Watts
Nominal Dimensions	
Width	210mm
Height	490mm
Depth	225mm

Constant research and development may necessitate specification changes at any time

CIRCUIT DIAGRAM

MODEL: DM21W, DM21R, DM21B

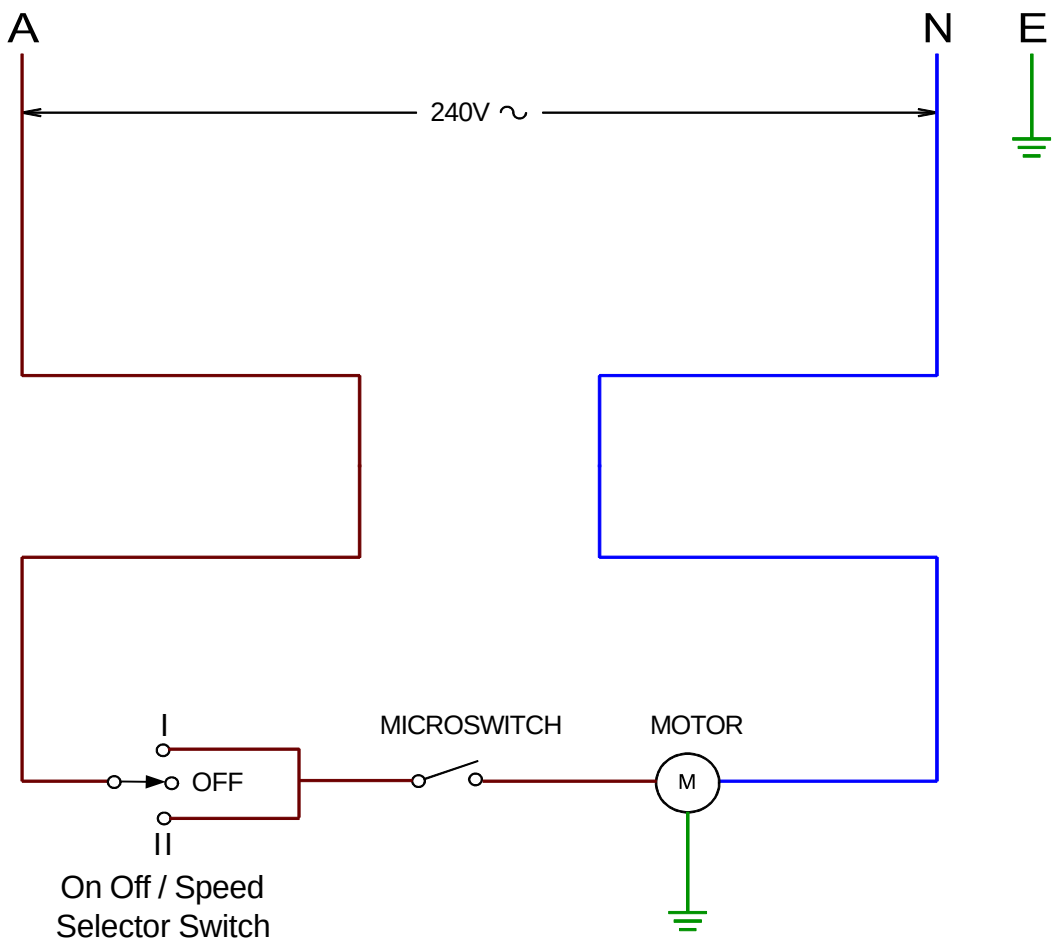

NOTE: This circuit diagram has been provided for reference and to assist qualified service and repair agents only. Under no circumstances should persons not suitably qualified attempt repairs to any electrical equipment.

SPARE PARTS

COMMON DM21 PARTS

PART NO	DESCRIPTION
EC0253	Micro Switch
EC0267	Plug & Cord 7.5A to IEC
EC0268	Mains Filter & IEC Socket
ES0214	Rocker Switch & Diode
ES0221	Motor Assembly Kit
MC0093	Clamp – Cable
MC0684	Mixer Cam

PART NO	DESCRIPTION
MC0687	3.2mm E-Clip
MS0001	SS Beaters, Spacer & Nut
PC0139	Nylon Bush - ½”
PC0291	Top Gasket
PC0292	Bearing Bush
PC0354	Saturn Beater
PC0365	Clamp – Cable, Nylon

ADDITIONAL PARTS FOR DM21B

PART NO	DESCRIPTION
PC0214	Cup Support – Black

PART NO	DESCRIPTION
PC0259	Blanking Plug – Black

ADDITIONAL PARTS FOR DM21R

PART NO	DESCRIPTION
PC0179	Cup Support – Red

PART NO	DESCRIPTION
PC0241	Blanking Plug - Red

ADDITIONAL PARTS FOR DM21W, DM21G, DM21M, DM21S

PART NO	DESCRIPTION
PC0290	Cup Support – White

PART NO	DESCRIPTION
PC0293	Blanking Plug – White

NOTES

This page is intentionally left blank. Please note your favourite settings here.

DECLARATION OF CONFORMITY

We the undersigned,

Manufacturer	**Roband Australia Pty Ltd**
Address	**1 Inman Road** **Cromer** **NSW 2099**
Country	**Australia**
Authorised Representative in EU	**Metcalfe Catering**
Address	**Haygarth Park, Blaenau Ffestiniog Gwynedd North Wales**
Country	**United Kingdom**

Certify and declare under our sole responsibility the following equipment,

DM21, DM21B, DM21C, DM21R, DM21W; **Includes international variants; …-Gxx, …-Fxx, …-Mxx**

Conforms with the requirements of the following EU Directives,

EMC Directive 2004/108/EC
Low Voltage Directive 2006/95/EC

RoHS Directive 2011/65/EU

Machinery Directive, 2006/42/EC

Based upon the following specifications applied;

EN55014.2:1997 Electromagnetic Compatibility. Requirements for household appliances, electric tools and similar apparatus. Immunity.

EN60335.1:2012 Household and similar electrical appliances - Safety.

EN60335.2.14 :2013 Household and similar electrical appliances – Safety – Particular requirements for kitchen machines.

Signed:

Printed Name Shane Marshall

Position in organisation *Engineering Manager*

Roband Australia Pty Ltd

Date: **2nd August 2016**

ROBAND AUSTRALIA PTY LTD

WARRANTY

Every care is taken to ensure that no defective equipment leaves our factory and all goods manufactured by us are guaranteed against defective workmanship and materials for a period of 12 months from the date of purchase. Roband Australia's obligations pursuant to this express warranty being limited to the repair or replacement of the defective goods or materials, at is option and subject to the terms contained within this Warranty statement. Where relevant, glass, Teflon® and lamps are **not** included in this warranty and RCD tripping due to moisture absorption by Tubular Heating Elements is not considered a warranty fault.

Generally, all goods claimed under this warranty must be returned to the factory or an authorized service agent, freight prepaid, for inspection. All parts deemed to be defective will be replaced, however, no claims will be entertained for second hand products, or parts damaged in transport, misused or modified in any way without our approval. For machines that are not considered to be portable (e.g. food bars, rotisseries, large hotplates and some bain maries), on site warranty service will be provided in capital city metropolitan areas only. In all other locations, the customer is responsible for all travelling time/service call costs and payment for this will be required prior to the commencement of the repair. The labour costs to actually repair the fault will be met by the company.

Any repairs or replacement of defective goods or materials pursuant to this warranty, must be authorized by Roband Australia prior to any action being taken. The company reserves the right to reject a claim for warranty if it is not completely satisfied with the circumstances under which it occurred and any other costs incurred for false claims or faults due to incorrect usage etc. are the responsibility of the claimant. Roband Australia Pty Ltd nor any subsidiary company or Agent shall be liable for loss of profit or damage to other equipment and property except where it is in breach of the guarantees provided in accordance with Schedule 2 of the Competition and Consumer Act 2010 (Cth) or the applicable legislation from time to time.

The goods come with guarantees that cannot be excluded under the Australian Consumer Law (ACL). You are entitled to a replacement or refund for a major failure and for compensation for any other reasonably forseeable loss or damage. You are also entitled to have the goods repaired or replaced if they fail to be of acceptable quality and the failure does not constitute a major failure.

Generally, authorized service agents are located in all areas which have authorized distribution dealers. For the name of your nearest Australian authorised service agent, please contact:

Roband Australia Pty Ltd

1 Inman Road, Cromer, NSW 2099

Warranty Number: 1800 268 848

Phone: (02) 9971 1788 Fax: (02) 9971 1336

All other countries please contact your selling Agent.

Please complete the following details and keep this card in a safe place.

NAME_____

ADDRESS_____

MODEL No:_____SERIAL No: _____DATE PURCHASE_____

NAME OF DEALER:_____

PLEASE RETAIN THIS SECTION FOR YOUR RECORDS

DO NOT POST

ROBAND® AUSTRALIA PTY LTD

OTHER LEADING PRODUCTS AVAILABLE:

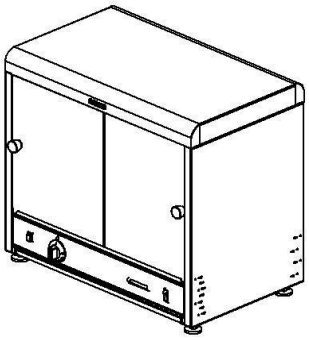

π-PLUS
PIE & FOOD WARMERS

DRINK MIXERS

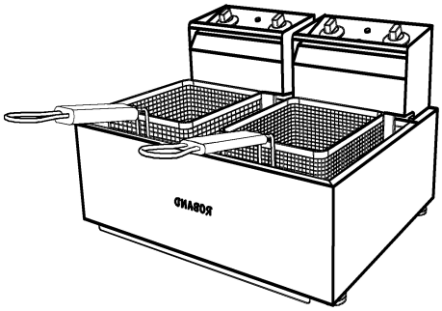

HIGH PERFORMANCE DEEP FRYERS

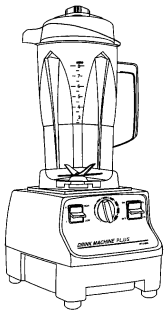

VITAMIX BLENDERS

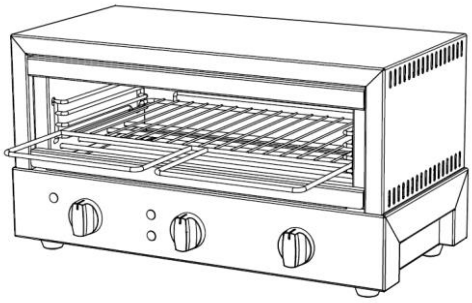

GRILLMAX TOASTERS

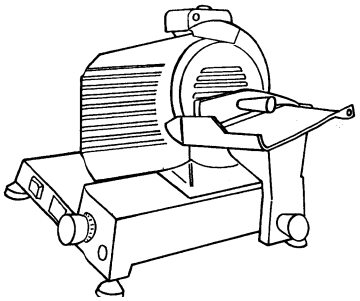

NOAW Slicers

Manufactured/Imported in Australia by:

ROBAND AUSTRALIA PTY LTD

Authorised Distributor/Agent