# Woodson Urn Models:
# W.Urn.10D
# W.Urn.20D
# W.Urn.30D

Due to continuous product research and development, the information contained herein is subject to change without notice

**Table of Contents**

General Recommendations ..... 2
General Safety ..... 2
Service ..... 2
Sharp Edges ..... 2
Power Cables ..... 2
Introduction ..... 3
General Precautions ..... 6
Setting Up ..... 7
Electrical Connection ..... 8
Operation ..... 9
General Recommendations ..... 9
Operating Instructions ..... 10
After Hours ..... 10
Over temperature cut-out ..... 10
Cleaning Procedure ..... 11
Maintenance ..... 12
Routines ..... 12
Stainless Steel Protection ..... 13
Water Damage ..... 14
Replacements ..... 15
Servicing and Replacement Information Line ..... 15
Troubleshooting ..... 16
Electrical Diagrams ..... 17
Warranty ..... 18
Appendix 1 – Australian Warranty and Importer/Distributor Contact Details 18
Australian Warranty Policy & Procedure ..... 18
Warranty Request Form ..... 23

Due to continuous product research and development, the information contained herein is subject to change without notice

## General Recommendations

**ATTENTION**

Carefully read this instruction booklet, as it contains important advice for safe installation, operation and maintenance. Keep this booklet on hand in a safe place for future reference by other operators or service technicians.

Do not store or use gasoline or other flammable vapours or liquids in the vicinity of this or any other appliance.

Only qualified personnel, specifically trained in the following instructions, can perform installation and service of the appliance:

***Disclaimer:***

**The manufacturer cannot be held responsible or liable for any injuries or damages of any kind occurred to persons, appliances or others, due to lack of conformity with the instructions indicated in this documentation.**

**The manufacturer also cannot be held responsible or liable for abuse, misuse and lack of conformity with the instructions indicated in this documentation in regards to installation, un-installation, operation, servicing or maintenance.**

**All appliances made by the manufacturer are delivered assembled and ready to install. Any installation, un-installation, servicing, maintenance and access or removal of any parts, panels or safety barriers that is not permitted, does not comply in accordance to this documentation, or not performed by a TRAINED AND AUTHORISED SPECIALISTS will result in the IMMEDIATE LOSS OF THE WARRANTY.**
**The manufacturer cannot be held responsible or liable for any unauthorized modifications. All modifications must be approved by the manufacturer in writing before initiating. All modifications or works performed to this appliance must be performed at all times by a TRAINED AND AUTHORISED SPECIALIST.**

## General Safety

### *Service*

Stoddart, one of our agents, or a similarly qualified person(s) should carry out any and all repairs, maintenance and services. Any repair person(s) should be instructed to read the safety warnings within this manual before commencing work on these units.
Do **NOT** remove any cover panels that may be on the appliance.

### *Sharp Edges*

Steel cutting processes such as those used in the construction of this appliance result in sharp edges. Whilst any such edges are removed to the best of our ability it is always wise to take care when contacting any edge. Particular care should be taken to avoid contact with any steel edge, and warnings should be given in regards to the danger of such contact to any repair or maintenance person(s) prior to commencement of any servicing.

### *Power Cables*

Ensure that any damaged power cord is replaced before further use.

## Introduction

Woodson Urns has been specifically designed to meet the rigorous demands of a busy food service operation, but is not meant to be used for continuous mass production of food.

Each Woodson Urn has been assembled and tested according to Stoddart's strict quality standards.

*Product Overview*

Configuration may vary according to model.

Specifications

*Technical Specifications*

| SPECIFICATIONS | | | |
|---|---|---|---|
| **Model** | **W.URN.10D** | **W.URN.20D** | **W.URN.30D** |
| Height | 480mm | 550mm | 645mm |
| Diameter | 240mm | 330mm | 330mm |
| Voltage | 220-240V, 50Hz | 220-240V, 50Hz | 220-240V, 50Hz |
| Power | 2200W | 2200W | 2200W |
| Connection | 10A Plug and Lead | 10A Plug and Lead | 10A Plug and Lead |
| Amps | 9.2 | 9.2 | 9.2 |
| Capacity | 10 Litres | 20 Litres | 30 Litres |
| | 35 cups (280ml) | 70 cups (280ml) | 105 cups (280ml) |

Due to continuous product research and development, the information contained herein is subject to change without notice

*Rating Plate*

The rating plate of the appliance contains identification and technical data and is located on the unit as shown below.

woodson

Made in Australia by:
**Tom Stoddart Pty Ltd**
ABN: 16 009 690 251
Phone: +617 3345 5011
service@stoddart.com.au
www.stoddart.com.au

Serial No: 123456789
Model No: W.URN.xx
Description: Woodson Urn
Date of Manufacture: 09/09/2012

Voltage: 220v- 240v 50 Hz
Rated Current Phase 1: 10 Amps
Protection: IPX3

DO NOT IMMERSE THIS PRODUCT IN WATER

**Sample Only**

Installation

***General Precautions***

Improper installation, adjustment, alteration, service or maintenance can cause property damage, injury or death.

- Read the installation, operating and maintenance instructions thoroughly before installation, maintenance or servicing this equipment.
- Do **NOT** use the appliance for other than its intended use.
- Do **NOT** store explosive substances such as aerosol cans with a flammable propellant in or near this appliance.
- Regulations require that all units be installed to the appropriate Australian standards.
- Regulations require that authorised persons carry out all electrical work.
- Only use this appliance with voltage specified on the rating label.

**WARNING!**

**Installation must comply with local electrical and health & safety requirements. Improper installation, adjustment, alteration, service or maintenance can cause property damage, injury or death.**

**ATTENTION**

**Ensure that a trained person installs this appliance.**

**Ensure the customer is trained on how to use the appliance.**

**Ensure the customer is given the manual**

***Setting Up***

*Handling*

- Use suitable means to avoid injury when moving this appliance.

*Site Preparation*

- The urn is to be placed on a suitable bench or worktop, at a comfortable working height. (850mm – 900mm)
- Ensure this appliance is placed on a level, stable work surface in an upright position.
- Allow an air gap between the appliance and other objects or surfaces. We recommend a minimum gap of 100mm for normal operational use (if the appliance is near any heat sensitive material we suggest you allow additional space). Please consult national and local standards to ensure that your appliance is positioned in accordance with any existing requirement.

*Unpacking*

- Check the appliance for damage before, during and after unpacking. If appliance is damaged, contact the dealer. Should any item have physical damage, report the details to the freight company and to the agent responsible for the despatch within seven (7) days of receipt. No claims will be accepted or processed after this period.
- Wear protective gloves to unpack the appliance from the box.
- The unit is supplied fully assembled.
- Remove all protective plastic film, tapes, ties and packers before installing and operating. Clean off any glue residue left over from the protective plastic film.
- Wipe all surfaces with a clean, sanitised cloth.

*First Time Operation*

- **Read the complete instruction manual before proceeding.**
- Plug the unit into a power source. Ensure the electrical cable is not damaged and does not hang over the counter, and the **"ON/OFF"** button is set to the **"OFF"** position.
- Your appliance is ready to use.

***Electrical Connection***

**WARNING!**

**This appliance must be installed in accordance with AS/NZS 60335.1**

*Information*

- The electrical supply shall comply with the rating plate data.
- The appliance is supplied with a plug and lead.
- Ensure that appliance is connected to a power point with compatible power rating.
- The appliance must be plugged directly into the power outlet. The use of extension leads or power boards are not to be used.
- The appliance should be earthed according to local electrical codes to prevent the possibility of electrical shock. It requires an earthed receptacle with separate electrical lines, protected by fuses or circuit breaker of the proper rating.
- If the supply cord is damaged, it **MUST** be replaced by the manufacturer, its service agent or similarly qualified persons in order to avoid a hazard. Power cable cannot be stretched or pressed during normal operation, service or anytime

**WARNING!**

**Some procedures in this manual require the power to the equipment to be turned off and isolated. Turn the power OFF at the power point and unplug the power supply lead by the plug body. If the power point is not readily accessible turn the equipment off at the isolation switch or the circuit breaker in the switchboard. Attach a yellow "CAUTION-DO NOT OPERATE" tag. This must be performed where relevant unless the procedures specify otherwise.**

**FAILURE TO DO SO MAY RESULT IN ELECTRIC SHOCK.**

## Operation

***General Recommendations***

When using any electrical appliance, safety precautions should always be observed.

Our appliances have been designed to give high performance. Hence, the appliance must be used exclusively for the purpose for which it has been designed.

Read these instrucitons carefully and retain for future reference

- All units **MUST** be installed according to the procedures stated in the installation section of this manual.
- This appliance should not be operated by person/s (including children) with reduced physical, sensory or mental capabilities, or lack of experience or knowledge, unless they have been given supervision or instruction concerning the safe use of the appliance by person/s responsible for their safety.
- In the case of new personnel, training is to be provided in advance.
- Do **NOT** use this appliance for any other purpose than its intended use.
- Do **NOT** store explosive substances such as aerosol cans with a flammable propellant in or near this appliance.
- The surfaces of this unit are **HOT** when in operation. Signage should be displayed for personnel and customers.
- This unit is **NOT** waterproof. Do **NOT** immerse the cord, plugs or the appliance in water or other liquids.
- Do **NOT** use appliance if power supply cord is damaged.
- If the power supply cord becomes damaged, it must be replaced by the manufacturer, an authorised service agent or similarly qualified persons to avoid a hazard.
- Do **NOT** use sharp objects to activate controls.
- If any fault is detected, disconnect the urn from the mains and call the service agent.
- Do **NOT** use the urn in an explosive atmosphere.
- The manufacturer declines any liability for damages to persons and/or things due and to an improper/wrong and/or unreasonable use of the appliance.
- Never switch ON the appliance if there is no water in the tank.
- Always use the appliance on a dry, level and heat-resistant surface away from any edges.
- The outside of the appliance gets very hot during boiling. Do not touch hot surface body to avoid scalding. Use handles or knobs.
- Do **NOT** remove the top cover while boiling. Scalding may occur if the lid is removed during the heating cycles.
- If the appliance is overfilled, boiling water may spill out of the unit when hot.
- Always empty completely all liquid before moving.

### *Operating Instructions*

Before using the appliance, first clean the tank, top cover and body, etc.

Fill the tank with cold water. There is a MAX line marked inside of the tank. Do **NOT** fill water over this mark.

Replace the cover and switch the unit on. The heating lamp indicator should now light up and the unit will begin to boil the water.

After about 35 minutes the water temperature will have reached 97 degrees and the auto-thermostat will switch off and automatically keep the water at the correct temperature.

**CAUTION!**

**The surfaces on this unit are hot!**

### *After Hours*

- The unit MUST be **switched OFF**.

### *Over temperature cut-out*

The appliance is fitted with a dry-protect thermal cut out. If this is activated, the appliance will turn itself off when there is no water in the tank. This can protect the heating elements and inner facility. The appliance must be unplugged before it can be reset. To reset the appliance, wait until the unit has been cooled down, then press the reset button at the bottom of the appliance. Once the reset button has been pressed, the appliance is now ready for use again.

This safety device may have been switched off during transport, if so reset the thermal cut-off following the above instructions.

If resetting this thermal cut out does not switch the unit back on, please contact the nearest authorised service facility for examination, repair or adjustment.

***Cleaning Procedure***

This appliance must be cleaned thoroughly after each use. This is in addition to weekly cleaning using vinegar to remove mineral deposits. If these deposits are not removed, pitting of the metal can occur and may result in damage to the appliance.

*Cleaning after use:*

1. Unplug from outlet when not in use and before cleaning.
2. Discard any remaining water and allow to cool down before cleaning.
3. DISCOLOURING OF THE WATER TANK

   This is caused by oxidizing of iron content in tap water. It can be removed by using a nylon brush and by following these simple steps:

   a. Cut a lemon into four, wrap the lemon in cloth and place inside the unit.
   b. Pour water up to the full water level indicator.
   c. Boil the water and let the mixture remain inside the unit for approximately 1 hour.
   d. Pour out the water and use a nylon brush to clean the inner part.
   e. To remove the smell of the lemon, boil water again, and dispose the water.
4. Lid and tank are washable with soap and water.
5. Use damp cloth to clean the body. Wipe it dry. Do not use abrasive materials to avoid scratches.

**CAUTION!**

**DO NOT spray Stainless Cleaner onto the heating surface.**

*External Surfaces*

- Clean the stainless steel and metal parts with warm (not hot) soapy water and a sponge.
- Rinse the stainless steel and metal parts with clean, fresh water.
- After cleaning, thoroughly wipe the stainless steel and metal parts dry with a soft cloth.

**WARNING!**

**The external surfaces of this unit are NOT waterproof, do NOT hose.**

**Some cleaning agents can damage stainless steel. For this reason we recommend cleaning with soapy water. Woodson do not take any responsibility for damage caused by the use of inappropriate cleaning agents.**
**In some areas, particularly seaside environments, stainless steel can be subject to surface discolouration or "tea staining". This can be removed with an appropriate cleaning agent which contains 10% sodium citrate. Ask your supplier of cleaning chemicals for a suitable brand.**

## Maintenance

***Routines***

*Schedules*

- To maintain optimal performance, maintenance and cleaning schedules must be regular and thorough.

*Inspection*

- Surfaces should be checked at least **once a week** for damage or deterioration.
- As part of the maintenance, a **qualified technician MUST** check the controls, mechanical parts and electrical wiring for damage, deterioration or need of adjustment.

*Faults*

- Not repairing small faults immediately can cause a complete breakdown. If any small faults occur, have them attended to promptly by a **qualified technician**.
- All faults should be reported to the distributor and manufacturer.

**WARNING!**

**If any electrical wires are damaged, the unit must NOT be switched ON until the parts have been fixed as injury or death can occur.**

***Stainless Steel Protection***

*Cleaning*

- For cleaning a stain on the surface of the stainless steel, check the cleaning section of the operation manual.
- All metal surfaces should be checked while cleaning for damage, scuffs or scapes as these can lead to rust and further damage to the product.

*Corrosion Protection*

- Stainless steel exhibits good resistance to corrosion however, if not properly maintained stainless steel could rust.
- Any sign of mild rust or corrosion should be thoroughly cleaned with warm soapy water and dried as soon as possible.
- **NEVER** use abrasive pads or cleaners for cleaning.
- Medium rust or corrosion can be treated by a commercial cleaning agent that contains citric/oxalic/nitric/phosphoric acid. Do **NOT** use cleaning agents with chlorides or other harsh chemicals as this can cause corrosion. A lemon slice or a few drops few drops of lemon juice added to the water can be used as a substitute**.** After treatment, wash with warm (not hot) soapy water and dry thoroughly.
- Thoroughly wipe the surfaces dry after cleaning and do NOT let water pool on the unit. Check crevices and folds for pooling.
- If an abrasive product is used while cleaning, thoroughly dry the unit and leave in an open or oxidised area for the stainless steel protective layer to replenish.
- When using, ensure all liquids and moisture is cleaned up straight away. Food liquids such as juices from vegetables and fruits should NOT be left on preparation surfaces.
- Do NOT leave items on the stainless steel such as cutting boards, rubber mats and bottles.

*Surface Finish*

- To protect the polish, stainless steel should be dried by wiping a dry soft cloth in the same direction as the grain.
- For **NON**-food contact surfaces, a light oil can be wiped on the surfaces with a cloth to enhance the stainless steel surface. Wipe in the direction of the grain.
- Some commercial stainless stain cleaners can leave residue or film on the metal; this may trap fine particles of food on the surface, thus deeming the surfaces not **food safe**.

***Water Damage***

*Information*

- Water damage to the electrical and mechanical parts of unit can occur through hosing on or around the appliance or immersing in water.
- Improper cleaning of the unit can lead to water damage. Check the cleaning section of the operation manual for more information.
- If water damage occurs allow the unit to dry and ensure the unit is checked by a **qualified technician** before switching the unit ON.
- All water damage that is not due to construction or mechanical faults is not covered by warranty.

**WARNING!**

**If any water damage occurs, the unit must NOT be switched ON.**

*Access to Electrical Wiring and Mechanical Parts*

**WARNING!**

**A qualified technician MUST perform maintenance of electrical or mechanical parts only**

**WARNING!**

**Switch the unit OFF at the main power supply before any maintenance or servicing.**

**CAUTION!**

**All due care has been taken in manufacturing, but there may be SHARP EDGES around the internal sections.**

***Replacements***

*Electrical Parts*

- All electrical parts can be replaced by the manufacturer.
- All electrical parts MUST be replaced by a **qualified technician**.

*Mechanical Parts*

- All mechanical parts can be replaced by the manufacturer.
- All mechanical parts MUST be replaced by a **qualified technician**.

***Servicing and Replacement Information Line***

**All Parts**
**Stoddart Manufacturing:**
Sales: 1300 791 954
Customer Service: 1300 307 289
Fax: (07) 3344 6166
Sales: fse@stoddart.com.au
Customer Service: service@stoddart.com.au
Spare Parts: spares@stoddart.com.au

## Troubleshooting

**WARNING!**

**Technician tasks only to be completed by qualified service people.**
**Check faults before calling service technician.**

**Task Type - (O) = Operator (T) = Technician Task**

| Problem | Possible Causes | Task | Possible Corrective Action |
|---|---|---|---|
| Not Heating | Unit not plugged in at the power socket. | O | Plug unit in at the power socket on the wall. |
| Not Heating | "On/Off" switch on power socket | O | Switch on power "on/off switch" on the power socket. |
| Not Heating | Thermal Cut out tripped | O | Depress button at rear |
| Urn too Cold | Temperature requires adjusting. | O | Adjust Thermostat |
| Urn too Hot | Temperature requires adjusting. | O | Adjust Thermostat |
| Urn not hot | Element failure. | T | Test & replace the element if necessary. |

Due to continuous product research and development, the information contained herein is subject to change without notice

## Electrical Diagrams

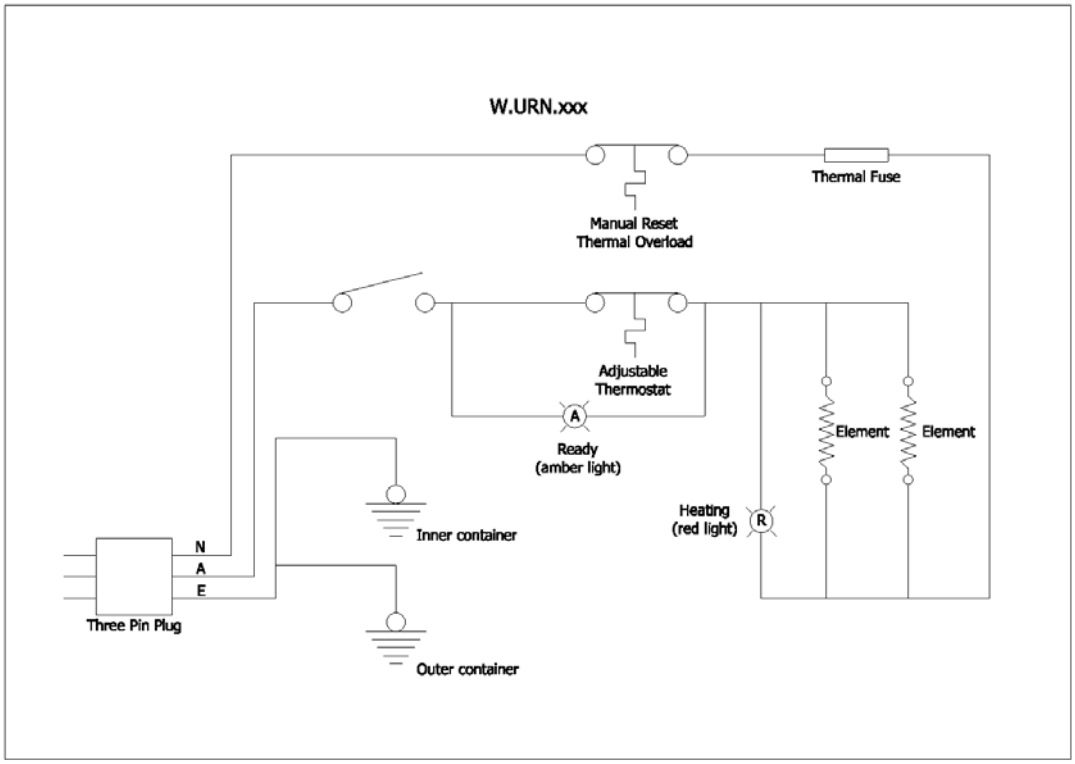

## Warranty

***Appendix 1 – Australian Warranty and Importer/Distributor Contact Details***

As the exclusive manufacturer and distributor of Woodson products in Australia, Stoddart Manufacturing (Stoddart) would like to congratulate you on your purchase of a Woodson product.

It should be noted by users of the product that it is not designed for household or domestic use and should not be used for this purpose.

This product is intended for commercial use, and in line with Australian electrical safety standards the following warnings are provided:

- This product is not intended for use by persons (including children) with reduced physical, sensory or mental capabilities, or lack of experience and knowledge, unless they have been given supervision or instruction concerning the use of the product by a person responsible for their safety. Children should be supervised to ensure that they do not play with the product.
- Users should also note that if the supply electricity cord is damaged in any way it should be replaced. Please contact Stoddart for parts and we will advise how to do this in order to avoid any electrical hazard.

***Australian Warranty Policy & Procedure***

**Stoddart is committed to providing a comprehensive and fair warranty for all of its equipment. The warranty incorporates a commercial manufacturers' warranty, together with the consumer warranty provisions of the National Consumer Protection Act (2009).**

*1. Commercial Warranty*

1.1 Stoddart warrants to the original purchaser ("**Customer**") of equipment manufactured or distributed by Stoddart that for **12 months** from the date of installation of the equipment by Customer (the "**Warranty Period**"), any defect in workmanship or material will, subject to clauses 1.2 and 3, be:

a) Repaired without charge; or
b) In respect of any **Major Failure** which cannot be repaired, replaced or the purchase money refunded.

1.2 Stoddart will not be liable for any associated loss, damage or compensation claim resulting from any defect in workmanship or material, and such liability is expressly excluded from the operation of clause 1.1.

*2. Consumer Warranty*

2.1 Subject to clause 3, equipment supplied by Stoddart to Customer for personal, domestic or household use or consumption comes with guarantees that cannot be excluded under the Australian Consumer Law. Customer is entitled to a replacement or refund for a **Major Failure** and compensation for any other reasonably foreseeable loss or damage. Customer is entitled to have the equipment repaired, or replaced if the equipment fails to be of an **Acceptable Quality** and that failure does not amount to a Major Failure.

*3. Warranty Clarification*

3.1 Customer acknowledges and agrees:

(i) A **Major Failure** occurs when the equipment suffers repeated and/or unexpected failure that cannot be repaired to Stoddart's satisfaction (acting reasonably) or which Stoddart considers (acting reasonably) renders the equipment unsafe or inoperable;

(ii) Stoddart can only warrant the equipment will be of an **Acceptable Quality** when Customer uses the equipment in accordance with Stoddart's manufacturer's instructions or user manual ("**Instructions**"). Acceptable Quality does not imply a lifetime guarantee for the equipment;

(iii) Certain components have a finite expected life, especially in a commercial or high-use environment. For example components such as refrigeration compressors, elements, thermostats/simmerstats, switches, fans, and temperature controllers can be expected to last up to **12 months** when used in accordance with the instructions;

(iv) In a commercial environment, components such as lamps, fluorescent tubes, light bulbs, glass, silicone seals, gaskets and plastic components will require regular replacement. This is not covered by warranty and is at Customer's cost;

(v) The life of equipment may be adversely affected by misuse, neglect, unauthorised alteration, incorrect installation, power surges, accident, use of inappropriate chemicals, flooding, and acts of God;

(vi) Proper maintenance and cleaning of equipment in accordance with the Instructions is essential to the equipment's effective operation;

(vii) On site warranty services are limited to sites within 50km from the nearest Stoddart authorised service agent and service agent's reasonable travel costs must be paid by Customer prior to the commencement of the repairs;

(viii) Additional labour costs will apply for service outside standard business hours of 8.00am to 4:30pm, Monday to Friday and on public holidays;

(ix) Stoddart cannot guarantee the performance of equipment made specifically to Customer's design or specifications. Stoddart will, where reasonably possible, draw any issues arising from Customer's design or specifications to Customer's attention during the commissioning and/or manufacturing process; and

(x) Customer must pay additional costs incurred by Stoddart as a result of Customer failing to provide suitable access to the equipment for inspection and service.

3.2 Stoddart's warranty liability under clauses 1 and 2 of these Terms exclude or do not cover:

a) The matters acknowledged by Customer in clause 3.1;

b) Situations where Stoddart is not satisfied (acting reasonably) the equipment or any part of the equipment has been used in accordance with the Instructions including misuse, neglect, unauthorised alteration, incorrect installation, power surges, accident, use of inappropriate chemicals, flooding, fire or act of God;

c) Any consequential loss, damage or expense arising directly or indirectly from use of the equipment otherwise than in accordance with the Instructions;

d) Any damage or malfunction arising from, or relating to, Customer's failure to properly maintain or clean the equipment in accordance with the Instructions;

e) Damage caused to equipment during transportation, which is outside Stoddart's standard delivery conditions.

f) Breakage or replacement of lamps, fluorescent tubes, light bulbs, glass, silicone seals, gaskets and plastic components.;

g) Maintenance, repair or other works not undertaken by a Stoddart authorised service agent

h) Where remote refrigeration is connected by a person other than Stoddart to equipment produced by Stoddart, Stoddart cannot accept claims for repair of TX valves and control components, as the

fault may arise from the installation of the remote refrigeration lines, equipment, and gas, by a party over which Stoddart has no control.

i) Transportation costs associated with transporting the equipment to a Stoddart authorised service agent where Stoddart considers (acting reasonably) that repairs cannot be undertaken on-site; and

j) Unless agreed to by Stoddart in writing to the contrary, warranty is not included in the sale price for goods sold to or installed in an overseas location.

*4. Warranty Claim Procedure*

The following procedure must be followed to claim under Stoddart's warranties:

a) Refer to the trouble-shooting section of the Instructions to establish the nature of the fault. Check the equipment is plugged-in, turned-on or has no other valid reason for not operating.

b) If step (a) does not overcome the issue, you should report the fault with the equipment to our service department (phone 1300 307 289 or fax 07 3344 6166). Our service department will assist you with further trouble-shooting. If our service department is unable to resolve the fault with the equipment they will request you complete a Stoddart Warranty Request Form and fax (fax 07 3344 6166) or email (service@stoddart.com.au) it to us.

c) To complete a Stoddart Warranty Request Form you will require the following information:

   i. Proof of purchase stating model number and date of purchase;
   ii. The serial number of the equipment (this is located on the ratings plate sticker);
   iii. A description of the fault/problem;
   iv. Your company details including the exact location of the equipment; and
   v. Any restrictions on times or methods of access to the equipment.

Stoddart will not arrange a warranty call out until it receives the above information from you in writing.

d) Upon receipt of a properly completed Stoddart Warranty Request Form, Stoddart will check its records to confirm whether the equipment is eligible for warranty repair. If warranty repair is required, Stoddart will issue an OFFICIAL AUTHORISATION NUMBER and details of work to be carried out by a Stoddart authorised service agent. This authorisation number MUST be obtained before any work is carried out. Stoddart will not accept invoices for work carried out without an official authorisation number or by an unauthorised service agent.

e) Customer must quote the official authorisation number on all correspondence and invoices relating to a warranty claim to ensure prompt processing by Stoddart.

f) Customer must pay all costs associated with a call-out for work that is not related to warranty repairs or outside Stoddart's Terms immediately.

*5. Timing of Warranty Services*

5.1 **Stoddart will comply with its warranty liabilities contained in these Terms in a timely manner.**

*6. General Maintenance and Repairs*

6.1 **The equipment must be repaired and maintained by a qualified technician. Stoddart's authorised service agents are experienced technicians who understand the equipment and carry commonly used spare parts. Contact Stoddart's national service number listed below for details of your nearest Stoddart authorised service agent.**

# WARRANTY REQUEST FORM

STODDART MANUFACTURING
FOOD SERVICE EQUIPMENT

Phone: (07) 3344 2444 Int: +617 3344 2444
Phone: 1300 307 289
Fax: (07) 3344 6166 Int: +617 3344 6166
Email: service@stoddart.com.au

To ensure we can provide the best possible service we require you to complete this form. Make, model and serial number, along with other essential information. To secure a call, you must also have an account with Stoddart or complete the credit card details below.
**THIS FORM MUST BE COMPLETED OR WARRANTY CANNOT BE PROCESSED**

Name of contact person on site: _____ Date: / /

Business/Organisation name: _____

Street Address: _____

Suburb: _____ State: _____ Post Code: _____

Phone (Site): _____ Mob: _____

Equipment Type: _____ Brand: _____

Model/PNC no.: _____ Serial no.: _____

Location (large sites only): _____ Open: _____ Close: _____

Date of purchase: _____

Company purchased from: _____

(please provide a copy of your tax invoice or delivery docket as proof of purchase)

Description of fault: _____

_____

_____

Has the following been checked (tick box if appropriate and checked)?

Electrical power supply ☐ Gas ☐ Water Supply ☐

Name of person requesting warranty (please print): _____

**CREDIT CARD DETAILS** – Required as security against chargeable work (see note below)

Card type: Visa ☐ Mastercard ☐

Cardholder name: _____ Card no.: _____

Signature: _____ Expiry Date: _____

**PLEASE NOTE:** Warranty call-outs take place Mondays to Fridays between 8.00 and 16.30 (except public holidays). Any calls outside these times will be subject to penalty rates. Certain items such as glass components and light fittings are not covered under warranty. Claims for non-covered parts, no faults found, travel over 50km or other items outside our standard terms and conditions will be chargeable. Any chargeable items will be COD terms – payable onsite.

**CREDIT CARD INFORMATION MUST BE PROVIDED AS SECURITY AGAINST FALSE WARRANTY CALL-OUTS. FAILURE TO DO SO WILL RESULT IN REQUEST BEING UNATTENDED. NORMAL BUSINESS HOURS ARE 8AM – 4.30PM MONDAY TO FRIDAY**