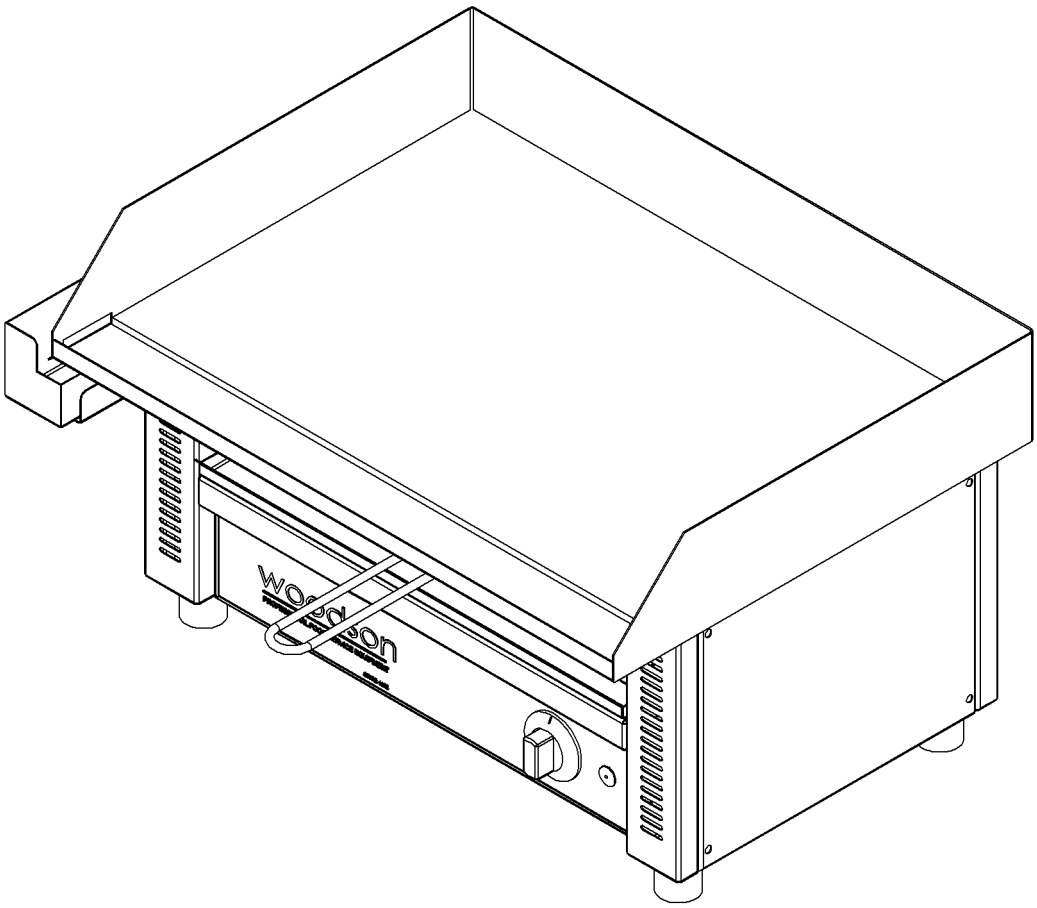

WOODSON GRIDDLE & LARGE GRIDDLE

Models WGDT60, WGDT65 & WGDT75

FEATURES
✓ Ideal for cooking foods such as hamburgers, steak, eggs, bacon, pancakes etc. with the added advantage of toasting on the under griddle rack
✓ Combined hot plate griddle with toaster
✓ Stainless steel construction
✓ Integrated splashback
✓ 12mm thick steel cooking plate
✓ Twin thermostat control for two side-by-side elements
✓ 520mm x 330mm plate size (WGDT60) or 671 x 484mm plate size (WGDT75)
✓ Easy-clean removable crumb tray
✓ Detachable side-mounted drain gutter

Due to continuous product research and development, the information contained herein is subject to change without notice

Table of Contents

General Recommendations 3
General Safety 3
Service 3
Sharp Edges 3
Power Cables 3
Introduction 4
Product Overview 4
Specifications....5
Technical Specifications 5
Technical/Connection Diagram 6
WDGA50 6
WGDA60 7
Installation 8
Installation 9
General Precautions 9
Setting Up 10
Handling....10
Site Preparation 10
Unpacking 10
First Time Operation....10
Electrical Connection 11
Operation....12
General Recommendations 12
Operating Instructions....13
Operation 13
After Hours....13
Cleaning Procedure 13
Grill Plate....13
Grease Drawer....13
External Surfaces 13
Maintenance....15
Routines....15
Schedules....15
Log Books....15
Inspection 15
Faults....15
Stainless Steel Protection....16
Cleaning....16
Corrosion Protection 16
Surface Finish 16
Water Damage 17
Information 17
Access to Electrical Wiring and Mechanical Parts 17
Replacements....18
Electrical Parts 18
Mechanical Parts 18
Servicing and Replacement Information Line 18
Troubleshooting....19

Due to continuous product research and development, the information contained herein is subject to change without notice

Electrical Diagrams 20
WGDA50 20
WGDA60 21

Spare Parts/ Assembly Diagram 22
WGDA50 22
WGDA60 23

Warranty..... 24
Appendix 1 – Australian Warranty and Importer/Distributor Contact Details 24
Australian Warranty Policy & Procedure..... 24
WARRANTY REQUEST FORM..... 26

General Recommendations

ATTENTION

Carefully read this instruction booklet, as it contains important advice for safe installation, operation and maintenance. Keep this booklet on hand in a safe place for future reference by other operators or service technicians.

Do not store or use gasoline or other flammable vapours or liquids in the vicinity of this or any other appliance.

Qualified personnel, specifically trained in the following instructions, can perform installation and service of the machine:

Disclaimer:

The manufacturer cannot be held responsible or liable for any injuries or damages of any kind occurred to persons, appliances or others, due to lack of conformity with the instructions indicated in this documentation.

The manufacturer also cannot be held responsible or liable for abuse, misuse and lack of conformity with the instructions indicated in this documentation in regards to installation, un-installation, operation, servicing or maintenance.

All appliances made by the manufacturer are delivered assembled and ready to install. Any installation, un-installation, servicing, maintenance and access or removal of any parts, panels or safety barriers that is not permitted, does not comply in accordance to this documentation, or not performed by a TRAINED AND AUTHORISED SPECIALISTS will result in the IMMEDIATE LOSS OF THE WARRANTY.
The manufacturer cannot be held responsible or liable for any unauthorized modifications. All modifications must be approved by the manufacturer in writing before initiating. All modifications or works performed to this appliance must be performed at all times by a TRAINED AND AUTHORISED SPECIALISTS.

General Safety

Service

Stoddart, one of our agents, or a similarly qualified person(s) should carry out any and all repairs, maintenance and services. Any repair person(s) should be instructed to read the safety warnings within this manual before commencing work on these units.
Do not remove any cover panels that may be on the appliance.

Sharp Edges

Steel cutting processes such as those used in the construction of this appliance result in sharp edges. Whilst any such edges are removed to the best of our ability it is always wise to take care when contacting any edge. Particular care should be taken to avoid contact with any steel edge, and warnings should be given in regards to the danger of such contact to any repair or maintenance person(s) prior to commencement of any servicing.

Power Cables

Ensure that any damaged power cord is replaced before further use.

Introduction

The Woodson Griddle and Large Griddle have been specifically designed to meet the rigorous demands of a busy food service operation. The Woodson WGDA50 and WGDA60 are ideal for frying foods such as burgers, bacon, eggs, steaks etc.

Each Woodson Griddle and Large Griddle has been assembled and tested according to Stoddart's strict quality standards.

Product Overview

Configuration may vary according to model.

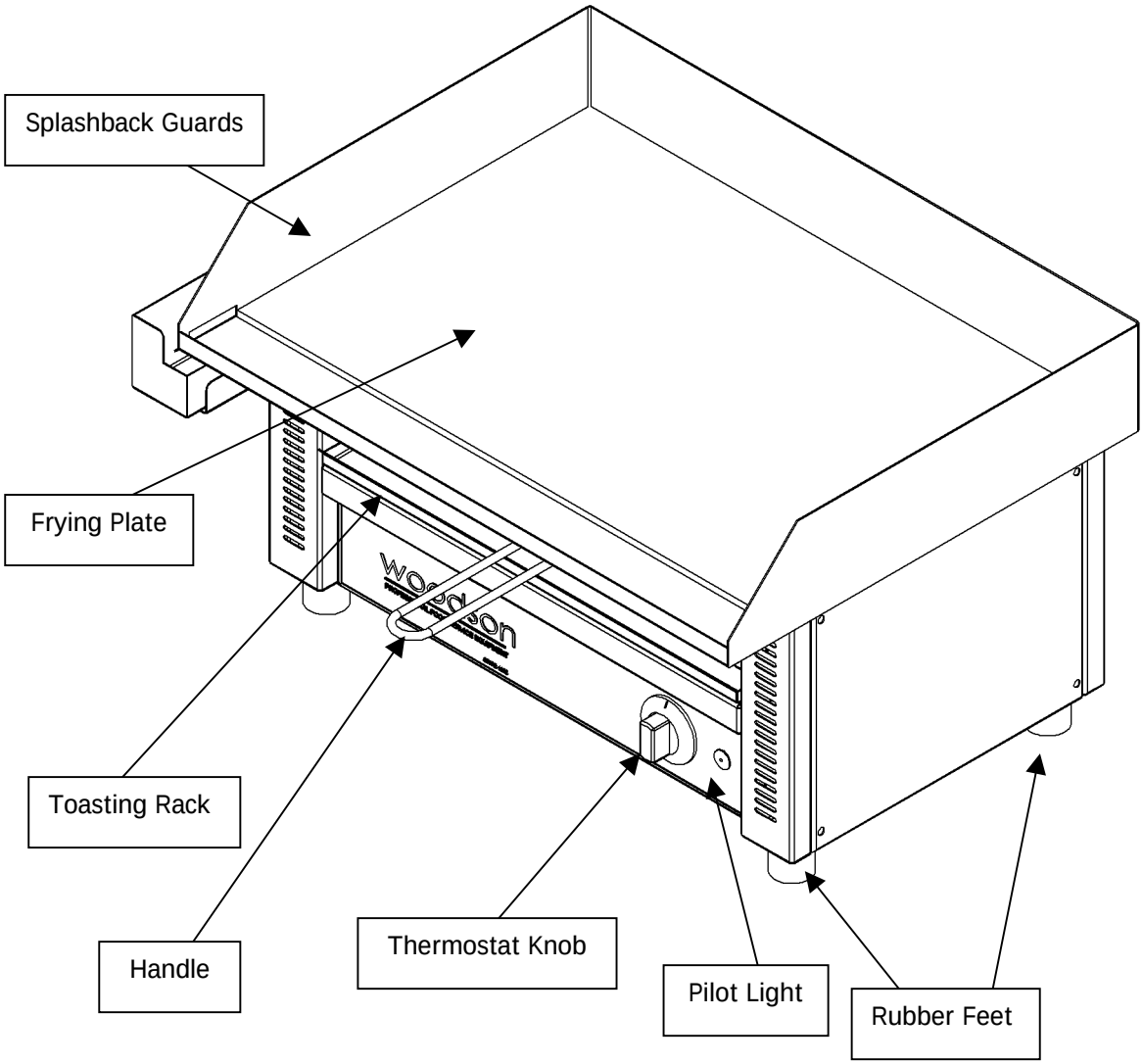

Specifications

Technical Specifications

SPECIFICATIONS			
Model	**WGDT60**	**WGDT65**	
Height	328mm	236mm	
Width	570mm	672mm	
Depth	449mm	599mm	
Voltage	240V	240V	
Power	2400W	3600W	
Connection	10A Plug and Lead	15A Plug and Lead	
Amps	10A	15A	
Plate size	523mm x 337mm	670mm x 484mm	
Temperature	285°C thermostat	2 x 285°C thermostats (1 per element)	
SHIPPING			
Height	500mm	400mm	
Width	700mm	900mm	
Depth	600mm	750mm	

Technical/Connection Diagram

WDGA50

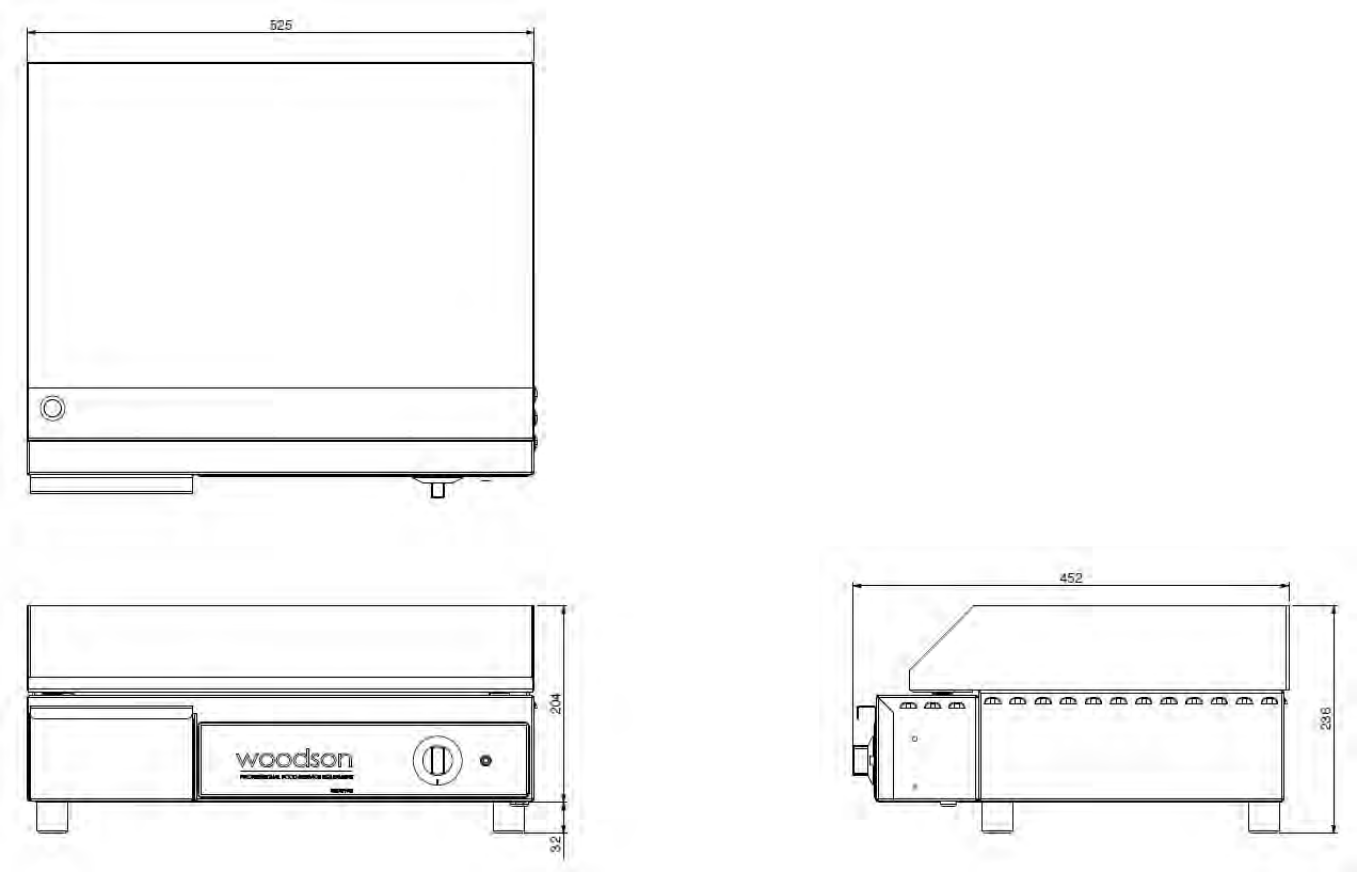

WGDA60

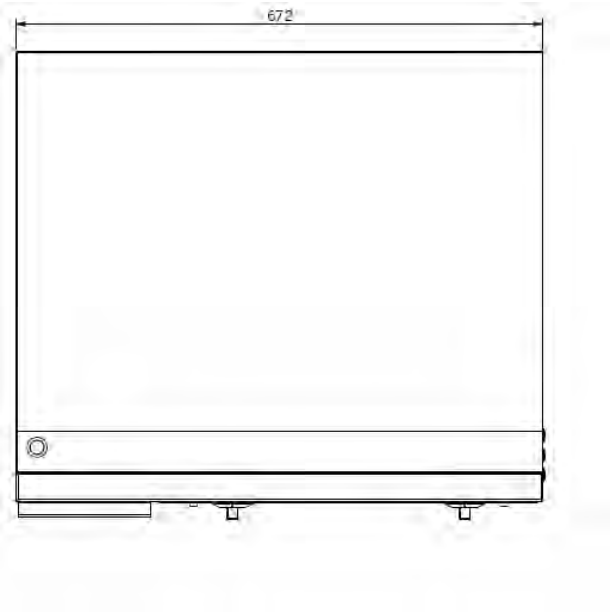

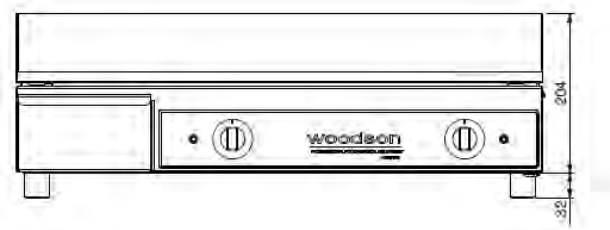

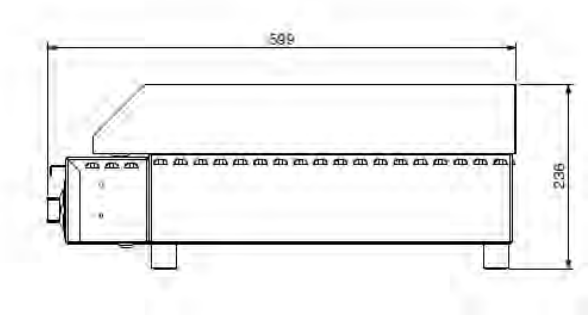

Rating Plate

The rating plate of the appliance contains identification and technical data and is located on the unit as shown below.

woodson	Made in Australia by: **Tom Stoddart Pty Ltd** ABN: 16 009 690 251 Phone: +617 3345 5011 service@stoddart.com.au www.stoddart.com.au
Serial No: 123456789 Model No: WGDA50 Description: Woodson Griddle Date of Manufacture: 5/11/2010	
Voltage: 220v- 240v 50 Hz Rated Current Phase 1: 10 Amps Phase 2: Phase 3: Protection: IPX0	

Sample Only

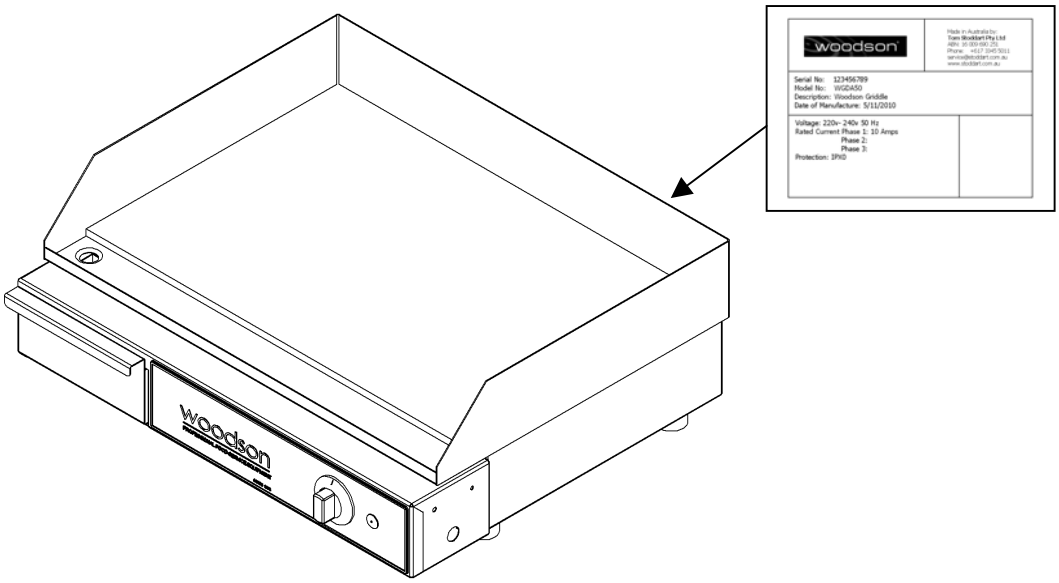

Installation

General Precautions

Improper installation, adjustment, alteration, service or maintenance can cause property damage, injury or death.

- Read the installation, operating and maintenance instructions thoroughly before installation, maintenance or servicing this equipment
- Do **NOT** use this appliance for other than its intended use.
- Do **NOT** store explosive substances such as aerosol cans with a flammable propellant in or near this appliance.
- Regulations require that all units be installed to the appropriate Australian standards.
- Regulations require that authorised persons carry out all electrical work.
- Only use this appliance with voltage specified on the rating label.
- Be careful not to touch moving parts.

WARNING!

Installation must comply with local electrical and health & safety requirements. Improper installation, adjustment, alteration, service or maintenance can cause property damage, injury or death.

ATTENTION

Ensure that a trained person installs this machine.

Ensure the customer is trained on how to use the machine.

Ensure the customer is given the manual

Setting Up

Handling

- Use suitable means to move the appliance: eg. A lift truck or fork pallet trucks (the forks should reach more than halfway beneath the appliance).

Site Preparation

- Ensure the site is level and properly cleaned.
- The Griddle is to be placed on a suitable bench or worktop, at a comfortable working height. (850mm – 900mm)
- Ensure the Griddle is placed on a level, stable work surface, away from other heat, water or grease emitting devices.
- Allow an air gap between the machine and other objects or surfaces. We recommend a minimum gap of 100mm for normal operational use (if the machine is near any heat sensitive material we suggest you allow additional space). Please consult national and local standards to ensure that your machine is positioned in accordance with any existing requirement.
- The Griddle is supplied with 4 rubber feet to reduce slip.

Unpacking

- Check the machine for damage before, during and after unpacking. If machine is damaged, contact the dealer. Should any item have physical damage, report the details to the freight company and to the agent responsible for the despatch within seven (7) days of receipt. No claims will be accepted or processed after this period.
- Wear protective gloves to unpack the appliance from the box.
- The unit is supplied fully assembled.
- Remove all protective plastic film, tapes, ties and packers before installing and operating. Clean off any glue residue left over from the protective plastic film.
- Wipe all surfaces with a clean, sanitised cloth.

First Time Operation

- **Read the complete instruction manual before proceeding.**
- Plug the unit into a power source. Ensure the electrical cable is not damaged and does not hang over the counter, and the **"ON / OFF"** button is set to the **"OFF"** position.
- Your griddle is ready to use.

Electrical Connection

WARNING!

This machine must be installed in accordance with AS/NZS 60335.1

Information

- The electrical supply shall comply with the rating plate data.
- The WGDA50 is supplied with a 10Amp plug and lead. The WGDA60 is supplied with a 20Amp plug and lead.
- Ensure that machine is connected to a power point with compatible power rating.
- The machine must be plugged directly into the power outlet. The use of extension leads or power boards are not to be used.
- The equipment should be earthed according to local electrical codes to prevent the possibility of electrical shock. It requires an earthed receptacle with separate electrical lines, protected by fuses or circuit breaker of the proper rating.
- If the supply cord is damaged, it MUST be replaced by the manufacturer, its service agent or similarly qualified persons in order to avoid a hazard. Power cable cannot be stretched kinked, pressed, during normal operation, service or anytime

WARNING!

Some procedures in this manual require the power to the equipment to be turned off and isolated. Turn the power OFF at the power point and unplug the power supply lead by the plug body. If the power point is not readily accessible turn the equipment off at the isolation switch or the circuit breaker in the switchboard. Attach a yellow "CAUTION-DO NOT OPERATE" tag. This must be performed where relevant unless the procedures specify otherwise.

FAILURE TO DO SO MAY RESULT IN ELECTRIC SHOCK.

Operation

General Recommendations

When using any electrical appliance, safety precautions should always be observed.

Our appliances have been designed to give high performance. Hence, the appliance must be used exclusively for the purpose for which it has been designed.

Read these instrucitons carefully and retain for future reference

- All units **MUST** be installed according to the procedures stated in the installation section of this manual.
- This appliance should not be operated by person/s (including children) with reduced physical, sensory or mental capabilities, or lack of experience or knowledge, unless they have been given supervision or instruction concerning the safe use of the appliance by person/s responsible for their safety.
- In the case of new personnel, training is to be provided in advance.
- Do **NOT** use this appliance for any other purpose than its intended use.
- Do **NOT** store explosive substances such as aerosol cans with a flammable propellant in or near this appliance.
- The surfaces of this unit are **HOT** when in operation. Signage should be displayed for personnel and customers.
- Keep fingers out of "**pinch point**" areas. Clearances between the doors, pans and panels are necessarily small.
- This unit is **NOT** waterproof. Do **NOT** use jet sprays or hoses to the exterior of the appliance.
- If the power supply cord becomes damaged, it must be replaced by the manufacturer, an authorised service agent or similarly qualified persons to avoid a hazard.
- Do **NOT** use machine if power supply cord is damaged.
- Be careful not to touch moving parts.
- Do **NOT** use sharp objects to activate controls.
- If any fault is detected, disconnect the unit from the mains and call the service agent.
- Do **NOT** use the unit in an explosive at mosphere.
- Avoid exposure to direct heat and/or humidity sources.
- The manufacturer declines any liability for damages to persons and/or things due and to an improper/wrong and/or unreasonable use of the machine.

Operating Instructions

Operation

This Griddle has full stainless steel construction. The grill plate is pre-greased with animal fat. It is operated by thermostat that is located on the front of the appliance. Exact cooking times and temperatures vary for different cooking conditions and therefore experimentation is essential. The following basic guide should be followed.

- Turn thermostat knob to the desired setting to operate.
- Allow time for the plate to reach the desired temperature.
- Return thermostat knob to the “0” or “OFF” position at the end of use.

NOTE!

WGDA60 has two thermostats for individual control of the left and right elements which corresponds to the left and right sides of the cooking plate.

After Hours

- The unit MUST be **switched OFF**.

Cleaning Procedure

Regular cleaning is essential to the longevity of the product and as a result the following procedures must be undertaken daily. Before commencing the cleaning procedure, ensure that the appliance is disconnected from the power source and has completely cooled down prior to cleaning.

Grill Plate

- The grill plate should be kept clean at all times, free from carbon and burnt materials.
- Clean the grill plate with a spatula or grill stone to the original appearance for faster cooking

Grease Drawer

- Wash and thoroughly dry the grease drawer

External Surfaces

- Clean the stainless steel and metal parts with warm (not hot) soapy water and a sponge.
- Rinsed the stainless steel and metal parts with clean, fresh water.
- After cleaning, thoroughly wipe the stainless steel and metal parts dry with a soft cloth. Do NOT let water pool on the unit. Check crevices and folds.

WARNING!

The external surfaces of this unit are NOT waterproof, do NOT hose or immerse the unit in water or allow the ingress of water into the interior of the machine or any electrical components

CAUTION!

DO NOT spray Stainless Cleaner onto the cooking surface.

Due to continuous product research and development, the information contained herein is subject to change without notice

CAUTION!

DO NOT use Steel Wool or other abrasive cleaners.

NOTE!

Some cleaning agents can damage stainless steel. For this reason we recommend cleaning with soapy water. Woodson do not take any responsibility for damage caused by the use of inappropriate cleaning agents.
In some areas, particularly seaside environments, stainless steel can be subject to surface discolouration or "tea staining". This can be removed with an appropriate cleaning agent which contains 10% sodium citrate. Ask your supplier of cleaning chemicals for a suitable brand.

Maintenance

Routines

Schedules

- To maintain optimal performance, maintenance and cleaning schedules must be regular and thorough.
- The unit should be cleaned at the end of the **every work day**.

Log Books

- Log books should be kept for all cleaning and maintenance of this unit.

Inspection

- Surfaces should be checked at least **once a week** for damage or deterioration.
- As part of the maintenance, a **qualified technician MUST** check the controls, mechanical parts and electrical wiring for damage, deterioration or need of adjustment.

Faults

- Not repairing small faults immediately can cause a complete breakdown. If any small faults occur, have them attended to promptly by a **qualified technician**.
- All faults should be reported to the distributor and manufacturer.

WARNING!

If any electrical wires are damaged, the unit must NOT be switched ON until the parts have been fixed as injury or death can occur.

Stainless Steel Protection

Cleaning

- For cleaning a stain on the surface of the stainless steel, check the cleaning section of the operation manual.
- All metal surfaces should be checked while cleaning for damage, scuffs or scapes as these can lead to rust and further damage to the product.

Corrosion Protection

- Stainless steel exhibits good resistance to corrosion however, if not properly maintained stainless steel can rust.
- Any sign of mild rust or corrosion should be thoroughly cleaned with warm soapy water and dried as soon as possible.
- **NEVER** use abrasive pads or cleaners for cleaning. Do not use Steel Wool.
- Medium rust or corrosion can treated by a commercial cleaning agent that contains citric/oxalic/nitric/phosphoric acid. Do **NOT** use cleaning agents with chlorides or other harsh chemicals as this can cause corrosion. A lemon slice or a few drops few drops of lemon juice added to the water can be used as a substitute**.** After treatment, wash with warm (not hot) soapy water and dry thoroughly.
- Thoroughly wipe the surfaces dry after cleaning and do NOT let water pool on the unit. Check crevices and folds for pooling.
- If an abrasive product is used while cleaning, thoroughly dry the unit and leave in an open or oxidised area for the stainless steel protective layer to replenish.
- When using, ensure all liquids and moisture is cleaned up straight away. Food liquids such as juices from vegetables and fruits should NOT be left on preparation surfaces.
- Do NOT leave items on the stainless steel such as cutting boards, rubber mats and bottles.

Surface Finish

- To protect the polish, stainless steel should be dried by wiping a dry soft cloth in the same direction as grained polish.
- For **NON**-food contact surfaces, a light oil can be wiped on the surfaces with a cloth to enhance the stainless steel surface. Wipe in the direction of the grain.
- Some commercial stainless stain cleaners can leave residue or film on the metal; this may trap fine particles of food on the surface, thus deeming the surfaces not **food safe**.

Water Damage

Information

- Water damage to the electrical and mechanical parts of unit can occur through hosing on or around the unit.
- Improper cleaning of the unit can lead to water damage. Check the cleaning section of the operation manual for more information.
- If water damage occurs allow the unit to dry and ensure the unit is checked by a **qualified technician** before switching the unit ON.
- All water damage that is not due to construction or mechanical faults is not covered by warranty.

WARNING!

If any water damage occurs, the unit must NOT be switched ON.

Access to Electrical Wiring and Mechanical Parts

WARNING!

Maintenance of electrical or mechanical parts MUST be performed by a qualified technician only

WARNING!

Switch the unit OFF at the main power supply before any maintenance or servicing.

CAUTION!

All due care has been taken in manufacturing, but there may be SHARP EDGES around the internal sections.

Replacements

Electrical Parts

- All electrical parts can be replaced by the manufacturer.
- All electrical parts MUST be replaced by a **qualified technician**.

Mechanical Parts

- All mechanical parts can be replaced by the manufacturer.
- All mechanical parts MUST be replaced by a **qualified technician**.

Servicing and Replacement Information Line

All Parts
Stoddart Manufacturing:

Sales: 1300 791 954

Customer Service: 1300 307 289

Fax: (07) 3344 6166

Sales: fse@stoddart.com.au

Customer Service: service@stoddart.com.au

Spare Parts: spares@stoddart.com.au

Troubleshooting

WARNING!

Technician tasks only to be completed by qualified service people.
Check faults before calling service technician.

Task Type - (O) = Operator (T) = Technician Task

Problem	Possible Causes	Task	Possible Corrective Action
Not Heating	Unit not turned "on" at the power socket.	O	Ensure that the unit is plugged in correctly
Not Heating	Thermostat broken	T	Call service technician.
Too Cold	Incorrect thermostat setting chosen	O	Choose another thermostat setting
Too Hot	Incorrect thermostat setting chosen	O	Choose another thermostat setting
Not Heating	Element failure.	T	Test & replace the element(s) if necessary.
Food is cooked unevenly	Incorrect thermostat setting	O	Choose appropriate setting
Not Heating	Pilot light is broken	T	Call service technician.

Due to continuous product research and development, the information contained herein is subject to change without notice

Electrical Diagrams

WGDA50

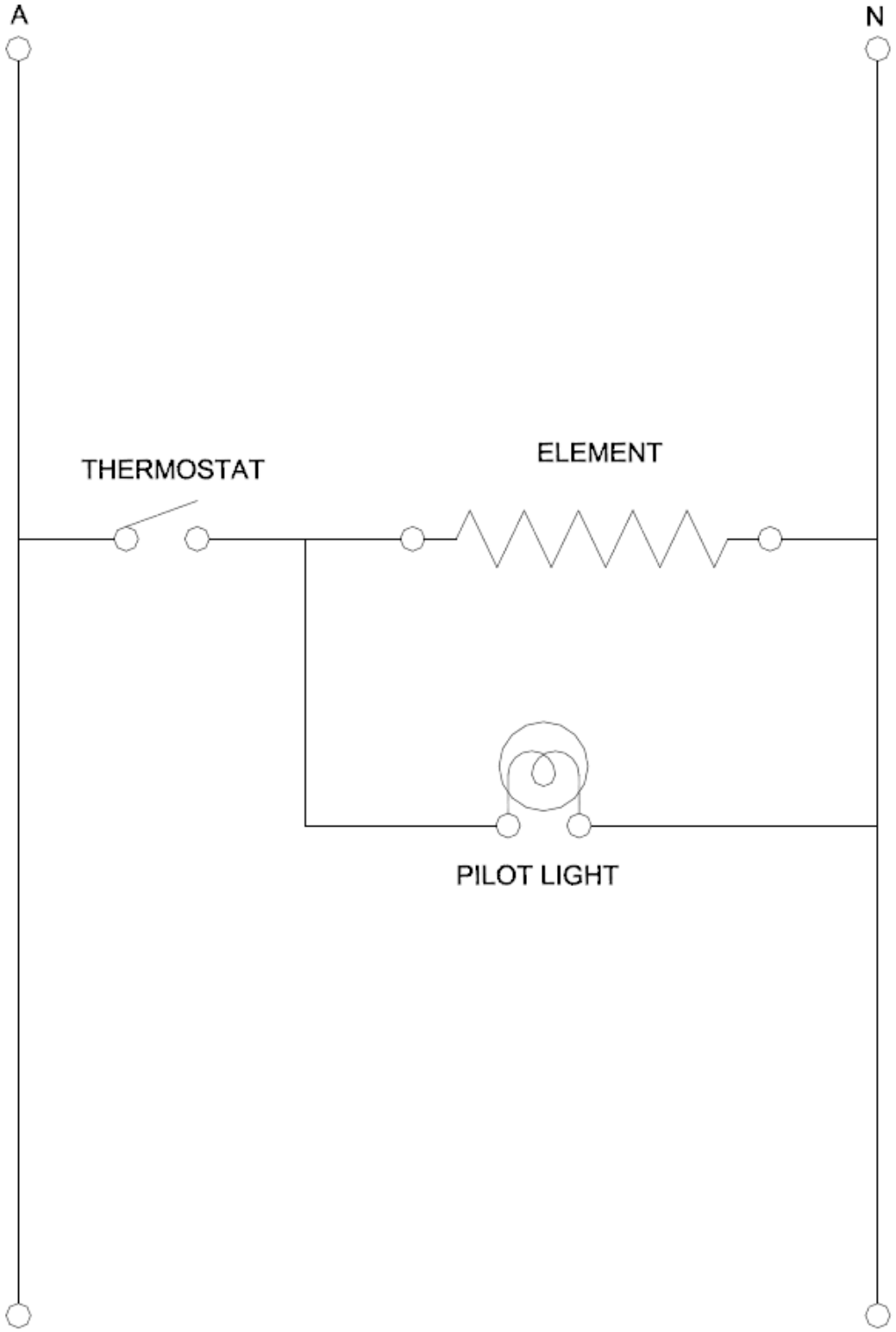

WGDA60

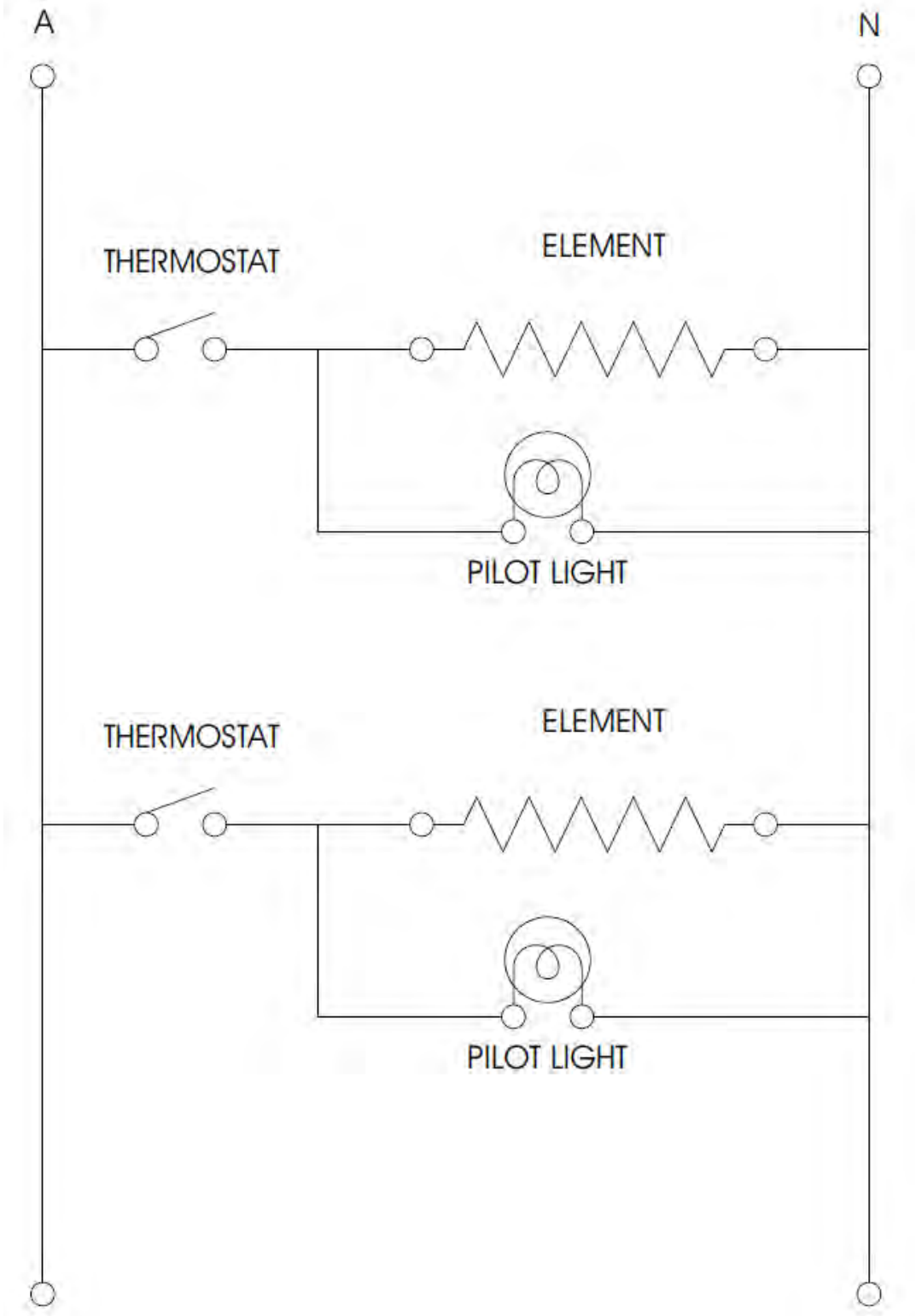
A
N
THERMOSTAT
ELEMENT
PILOT LIGHT
THERMOSTAT
ELEMENT
PILOT LIGHT

Spare Parts / Assembly Diagram

WGDA50

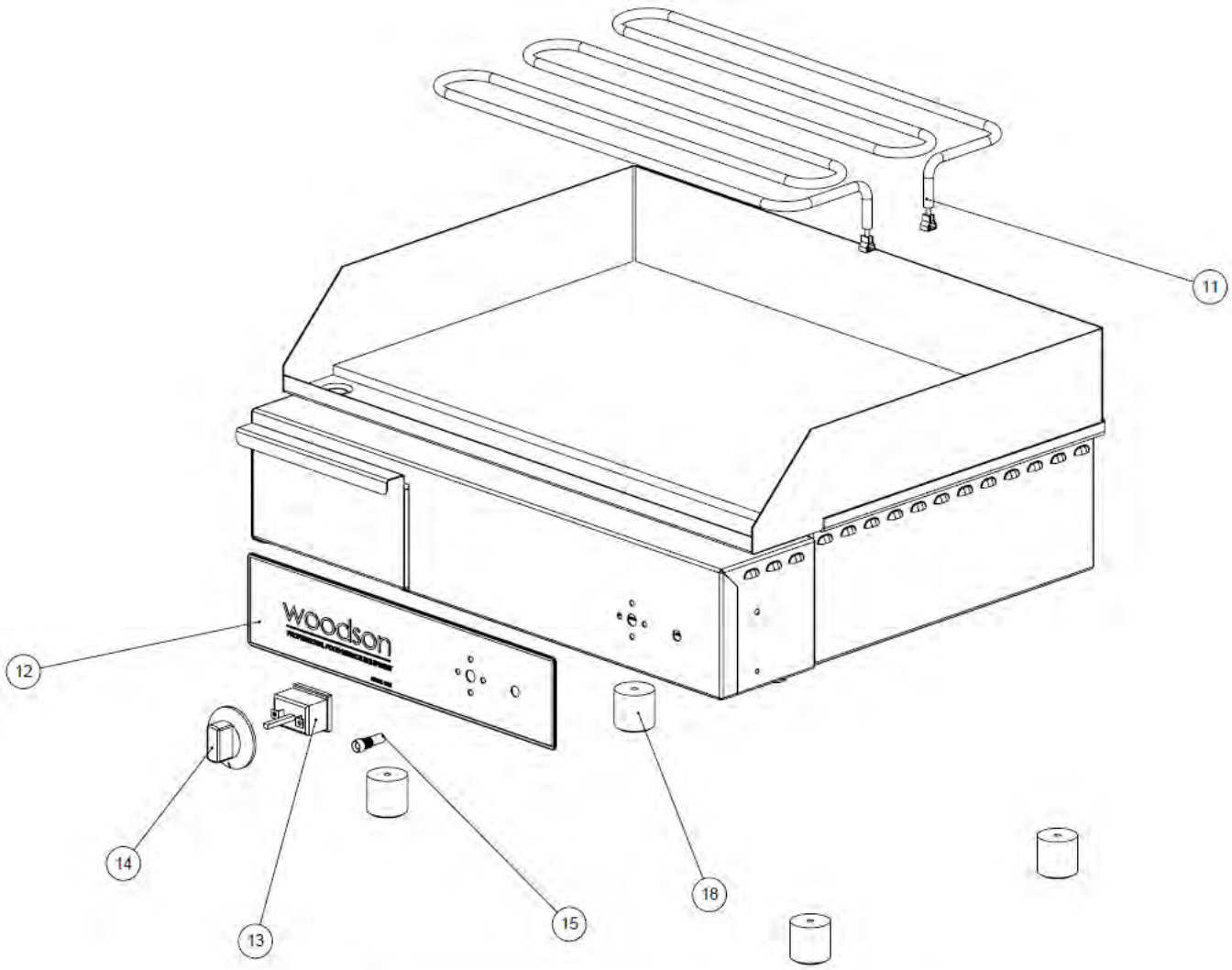

ITEM NO.	PART NUMBER	Spare Parts Description	Spare Parts/QTY.
11	CMEL-0352	Element	1
12	CMGE-0384	Decal	1
13	CMEL-0336	Thermostat	1
14	CMEL-0698	Knob	1
15	CMEL-1035	Indicator Light	1
18	CMGE-0276	Rubber Foot	4

WGDA60

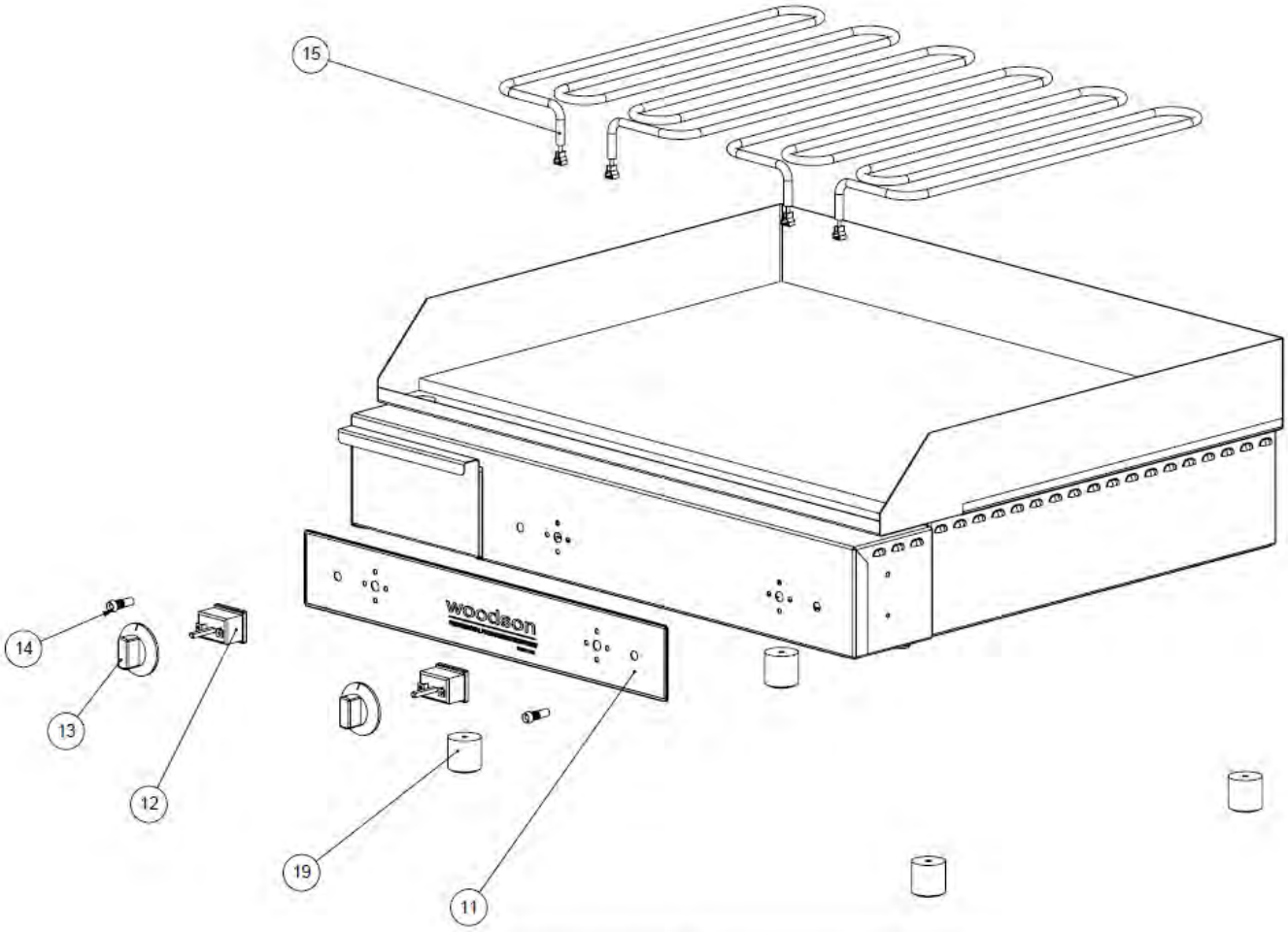

ITEM NO.	PART NUMBER	Spare Parts Description	Spare Parts/QTY.
11	CMGE-0385	Decal	1
12	CMEL-0336	Thermostat	2
13	CMEL-0698	Knob	2
14	CMEL-1035	Indicator Light	2
15	CMEL-0352	Element	2
19	CMGE-0276	Rubber Foot	4

Warranty

Appendix 1 – Australian Warranty and Importer/Distributor Contact Details

As the exclusive manufacturer and distributor of Woodson products in Australia, Stoddart Manufacturing (Stoddart) would like to congratulate you on your purchase of a Woodson product.

It should be noted by users of the product that it is not designed for household or domestic use and should not be used for this purpose.

This product is intended for commercial use, and in line with Australian electrical safety standards the following warnings are provided:

- This product is not intended for use by persons (including children) with reduced physical, sensory or mental capabilities, or lack of experience and knowledge, unless they have been given supervision or instruction concerning the use of the product by a person responsible for their safety. Children should be supervised to ensure that they do not play with the product.
- Users should also note that if the supply electricity cord is damaged in any way it should be replaced. Please contact Stoddart for parts and we will advise how to do this in order to avoid any electrical hazard.

Australian Warranty Policy & Procedure

Stoddart is committed to providing a comprehensive and fair warranty for all of its equipment. The warranty incorporates a commercial manufacturers' warranty, together with the consumer warranty provisions of the National Consumer Protection Act (2009).

1. Commercial Warranty

1.1 Stoddart warrants to the original purchaser ("**Customer**") of equipment manufactured or distributed by Stoddart that for **12 months** from the date of installation of the equipment by Customer (the "**Warranty Period**"), any defect in workmanship or material will, subject to clauses 1.2 and 3, be:

a) Repaired without charge; or
b) In respect of any **Major Failure** which cannot be repaired, replaced or the purchase money refunded.

1.2 Stoddart will not be liable for any associated loss, damage or compensation claim resulting from any defect in workmanship or material, and such liability is expressly excluded from the operation of clause 1.1.

2. Consumer Warranty

2.1 Subject to clause 3, equipment supplied by Stoddart to Customer for personal, domestic or household use or consumption comes with guarantees that cannot be excluded under the Australian Consumer Law. Customer is entitled to a replacement or refund for a **Major Failure** and compensation for any other reasonably foreseeable loss or damage. Customer is entitled to have the equipment repaired, or replaced if the equipment fails to be of an **Acceptable Quality** and that failure does not amount to a Major Failure.

3. Warranty Clarification

3.1 Customer acknowledges and agrees:

(i) A **Major Failure** occurs when the equipment suffers repeated and/or unexpected failure that cannot be repaired to Stoddart's satisfaction (acting reasonably) or which Stoddart considers (acting reasonably) renders the equipment unsafe or inoperable;

(ii) Stoddart can only warrant the equipment will be of an **Acceptable Quality** when Customer uses the equipment in accordance with Stoddart's manufacturer's instructions or user manual ("**Instructions**"). Acceptable Quality does not imply a lifetime guarantee for the equipment;

(iii) Certain components have a finite expected life, especially in a commercial or high-use environment. For example components such as refrigeration compressors, elements, thermostats/simmerstats, switches, fans, and temperature controllers can be expected to last up to **12 months** when used in accordance with the instructions;

(iv) In a commercial environment, components such as lamps, fluorescent tubes, light bulbs, glass, silicone seals, gaskets and plastic components will require regular replacement. This is not covered by warranty and is at Customer's cost.;

(v) The life of equipment may be adversely affected by misuse, neglect, unauthorised alteration, incorrect installation, power surges, accident, use of inappropriate chemicals, flooding, and acts of God;

(vi) Proper maintenance and cleaning of equipment in accordance with the Instructions is essential to the equipment's effective operation;

(vii) On site warranty services are limited to sites within 50km from the nearest Stoddart authorized service agent and service agent's reasonable travel costs must be paid by Customer prior to the commencement of the repairs;

(viii) Additional labour costs will apply for service outside standard business hours of 8.00am to 4:30pm, Monday to Friday and on public holidays;

(ix) Stoddart cannot guarantee the performance of equipment made specifically to Customer's design or specifications. Stoddart will, where reasonably possible, draw any issues arising from Customer's design or specifications to Customer's attention during the commissioning and/or manufacturing process; and

(x) Customer must pay additional costs incurred by Stoddart as a result of Customer failing to provide suitable access to the equipment for inspection and service.

3.2 Stoddart's warranty liability under clauses 1 and 2 of these Terms exclude or do not cover:

a) The matters acknowledged by Customer in clause 3.1;

b) Situations where Stoddart is not satisfied (acting reasonably) the equipment or any part of the equipment has been used in accordance with the Instructions including misuse, neglect, unauthorised alteration, incorrect installation, power surges, accident, use of inappropriate chemicals, flooding, fire or act of God;

c) Any consequential loss, damage or expense arising directly or indirectly from use of the equipment otherwise than in accordance with the Instructions;

d) Any damage or malfunction arising from, or relating to, Customer's failure to properly maintain or clean the equipment in accordance with the Instructions;

e) Damage caused to equipment during transportation, which is outside Stoddart's standard delivery conditions.

f) Breakage or replacement of lamps, fluorescent tubes, light bulbs, glass, silicone seals, gaskets and plastic components.;

g) Maintenance, repair or other works not undertaken by a Stoddart authorised service agent

h) Where remote refrigeration is connected by a person other than Stoddart to equipment produced by Stoddart, Stoddart cannot accept claims for repair of TX valves and control components, as the fault may arise from the installation of the remote refrigeration lines, equipment, and gas, by a party over which Stoddart has no control.

i) Transportation costs associated with transporting the equipment to a Stoddart authorized service agent where Stoddart considers (acting reasonably) that repairs cannot be undertaken on-site; and

j) Unless agreed to by Stoddart in writing to the contrary, warranty is not included in the sale price for goods sold to or installed in an overseas location.

4. Warranty Claim Procedure

The following procedure must be followed to claim under Stoddart's warranties:

a) Refer to the trouble-shooting section of the Instructions to establish the nature of the fault. Check the equipment is plugged-in, turned-on or has no other valid reason for not operating.

b) If step (a) does not overcome the issue, you should report the fault with the equipment to our service department (phone 1300 307 289 or fax 07 3344 6166). Our service department will assist you with further trouble-shooting. If our service department is unable to resolve the fault with the equipment they will request you complete a Stoddart Warranty Request Form and fax (fax 07 3344 6166) or email (service@stoddart.com.au) it to us.

c) To complete a Stoddart Warranty Request Form you will require the following information:

i. Proof of purchase stating model number and date of purchase;
ii. The serial number of the equipment (this is located on the ratings plate sticker);
iii. A description of the fault/problem;
iv. Your company details including the exact location of the equipment; and
v. Any restrictions on times or methods of access to the equipment.

Stoddart will not arrange a warranty call out until it receives the above information from you in writing.

d) Upon receipt of a properly completed Stoddart Warranty Request Form, Stoddart will check its records to confirm whether the equipment is eligible for warranty repair. If warranty repair is required, Stoddart will issue an OFFICIAL AUTHORISATION NUMBER and details of work to be carried out by a Stoddart authorised service agent. This authorisation number MUST be obtained before any work is carried out. Stoddart will not accept invoices for work carried out without an official authorisation number or by an unauthorised service agent.

e) Customer must quote the official authorisation number on all correspondence and invoices relating to a warranty claim to ensure prompt processing by Stoddart.

f) Customer must pay all costs associated with a call-out for work that is not related to warranty repairs or outside Stoddart's Terms immediately.

5. Timing of Warranty Services

5.1 **Stoddart will comply with its warranty liabilities contained in these Terms in a timely manner.**

6. General Maintenance and Repairs

6.1 **The equipment must be repaired and maintained by a qualified technician. Stoddart's authorised service agents are experienced technicians who understand the equipment and carry commonly used spare parts. Contact Stoddart's national service number listed below for details of your nearest Stoddart authorised service agent.**

For Warranty, maintenance, spare parts and repairs, contact:
Tel: 1300 307 289 Fax: 07 3344 6166 email: service@stoddart.com.au

Due to continuous product research and development, the information contained herein is subject to change without notice

WARRANTY REQUEST FORM

STODDART MANUFACTURING
FOOD SERVICE EQUIPMENT

Phone: (07) 3344 2444 Int: +617 3344 2444
Phone: 1300 307 289
Fax: (07) 3344 6166 Int: +617 3344 6166
Email: service@stoddart.com.au

To ensure we can provide the best possible service we require you to complete this form. Make, model and serial number, along with other essential information. To secure a call, you must also have an account with Stoddart or complete the credit card details below.

THIS FORM MUST BE COMPLETED OR WARRANTY CANNOT BE PROCESSED

Name of contact person on site: _____ Date: / /

Business/Organisation name: _____

Street Address: _____

Suburb: _____ State: _____ Post Code: _____

Phone (Site): _____ Mob: _____

Equipment Type: _____ Brand: _____

Model/PNC no.: _____ Serial no.: _____

Location (large sites only): _____ Open: _____ Close: _____

Date of purchase: _____

Company purchased from: _____

(please provide a copy of your tax invoice or delivery docket as proof of purchase)

Description of fault: _____

_____

_____

Has the following been checked (tick box if appropriate and checked)?

Electrical power supply ☐ Gas ☐ Water Supply ☐

Name of person requesting warranty (please print): _____

CREDIT CARD DETAILS – Required as security against chargeable work (see note below)

Card type: Visa ☐ Mastercard ☐

Cardholder name: _____ Card no.: _____

Signature: _____ Expiry Date: _____

PLEASE NOTE: Warranty call-outs take place Mondays to Fridays between 8.00 and 16.30 (except public holidays). Any calls outside these times will be subject to penalty rates. Certain items such as glass components and light fittings are not covered under warranty. Claims for non-covered parts, no faults found, travel over 50km or other items outside our standard terms and conditions will be chargeable. Any chargeable items will be COD terms – payable onsite.

CREDIT CARD INFORMATION MUST BE PROVIDED AS SECURITY AGAINST FALSE WARRANTY CALL-OUTS. FAILURE TO DO SO WILL RESULT IN REQUEST BEING UNATTENDED. NORMAL BUSINESS HOURS ARE 8AM – 4.30PM MONDAY TO FRIDAY