www.santos.fr

Brushless Blender # 62

Green technology and high performance
Brushless motor & TiN blade

NEW
PERFECT FOR SMOOTHIES

Internationally patented models

Brushless Blender # 62

Blender for smoothies and iced drinks

You can make any kind of cocktails, smoothies, fruit juices, milkshakes, granitas, iced coffee frappe with the Blender #62
Ideal appliance for juice bars, fast food, hotels…
The Brushless Blender fits everywhere thanks to its sober design and its low overall dimensions.
It can be used equally in its standard version or in-counter version to save space.
Its sound enclosure reduces the noise levels and the brushless motor is very quiet.

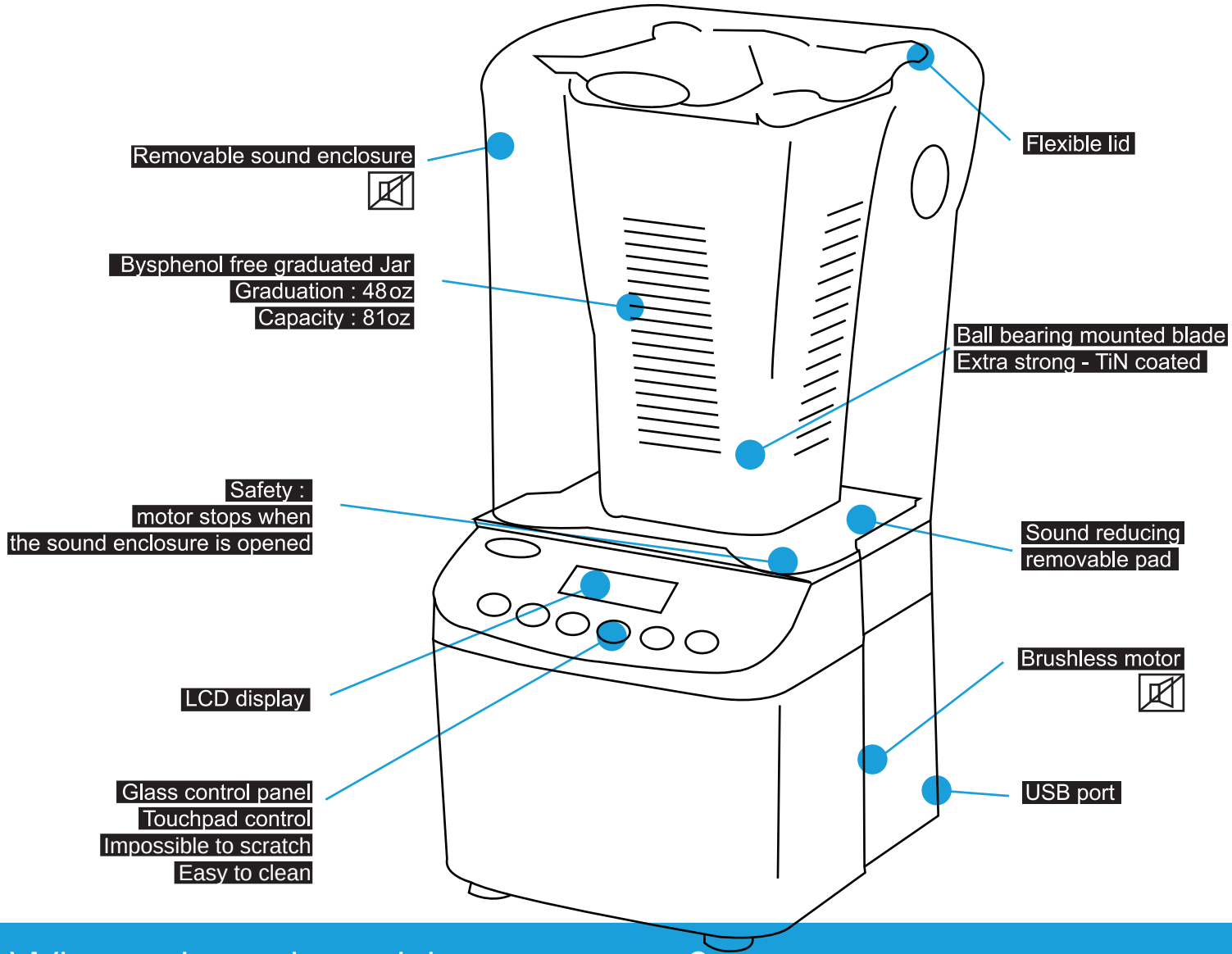

What does brushless mean ?

Unlike universal motors, brushless motor has no brushes (permanent magnet rotor) which gives it a long lifetime (no weaparts), an excellent energy efficiency and a low noise level.
Light years ahead in terms of sustainable development.

The Brusless Blender can be used
either in standard version
or in-counter version (no additionnal option).
Easy to fit into a counter : simple
and quick dismantling of the base.

Brushless Blender # 62

Performance, simplicity, silence

PERFORMANCE

Brushless motor : low consumption, high performance (8N.m).

TiN coated blade : high resistance, adapted to intensive use.

It crushes hard ice cubes in a few seconds.

Obtain the perfect drink thanks to the various recipes Brushless Blender # 62 offers.

SIMPLICITY

Ease of use : touchpad control panel with LCD display.

6 programmable buttons (1 to 5 + Pulse) with 30 pre-programmed recipes.

Infinite programs possibilities thanks to the USB port (free software).

Easy cleaning : removable sound enclosure, pad and jar.

Stackable jars, graduated in milliliters and ounces, adapted to right-handers and left-handers.

Stackable lids.

Easy to fit into a counter.

Easy maintenance: each part of the blender can be dismantled (including the blade).

SILENCE

Silent brushless motor.

Removable sound enclosure reducing significantly the noise level.

Sound reducing pad.

Technical specifications

Motor

Single phase : 100-120 V - 50/60 Hz
220-240 V - 50/60 Hz

Max torque : 8N.m

Weight

Net : 8.3 Kg (31 lbs)
Shipping : 9.8 Kg (33 lbs)

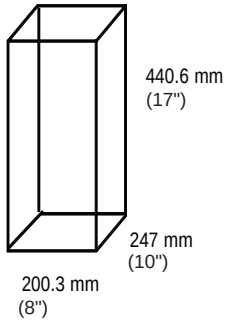

Standard appliance

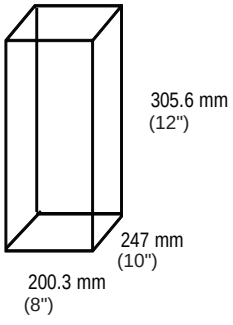

In-counter Version

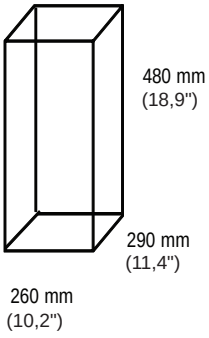

Shipping box

Safety - Standard - Hygiene

In accordance with the following regulations

Machinery directive 2006/42/EC

Electromagnetic compatibility 2004/108/EC

Electrical equipment designed for use within certain voltage limits "low voltage" 2006/95/EC

RoHS directive 2002/95/EC

Harmonized European standards:

EN ISO 12100-1 and 2: 2004 - EN 60204-1: 2006

EN 12852: 2001 Food processors and blenders

Safety and hygiene requirements

Electrical safety

Waterproof On/Off interlock switch

Appliances are 100% tested after assembly.

Thermal safety

Motor protected by internal thermal detector.

Acoustic safety

Very silent and powerful brushless motor.

Hygiene

All removable parts can be put in a dishwasher or easily cleaned with hot soapy water.

Bysphenol free.

Brushless Blender #62

www.santos.fr

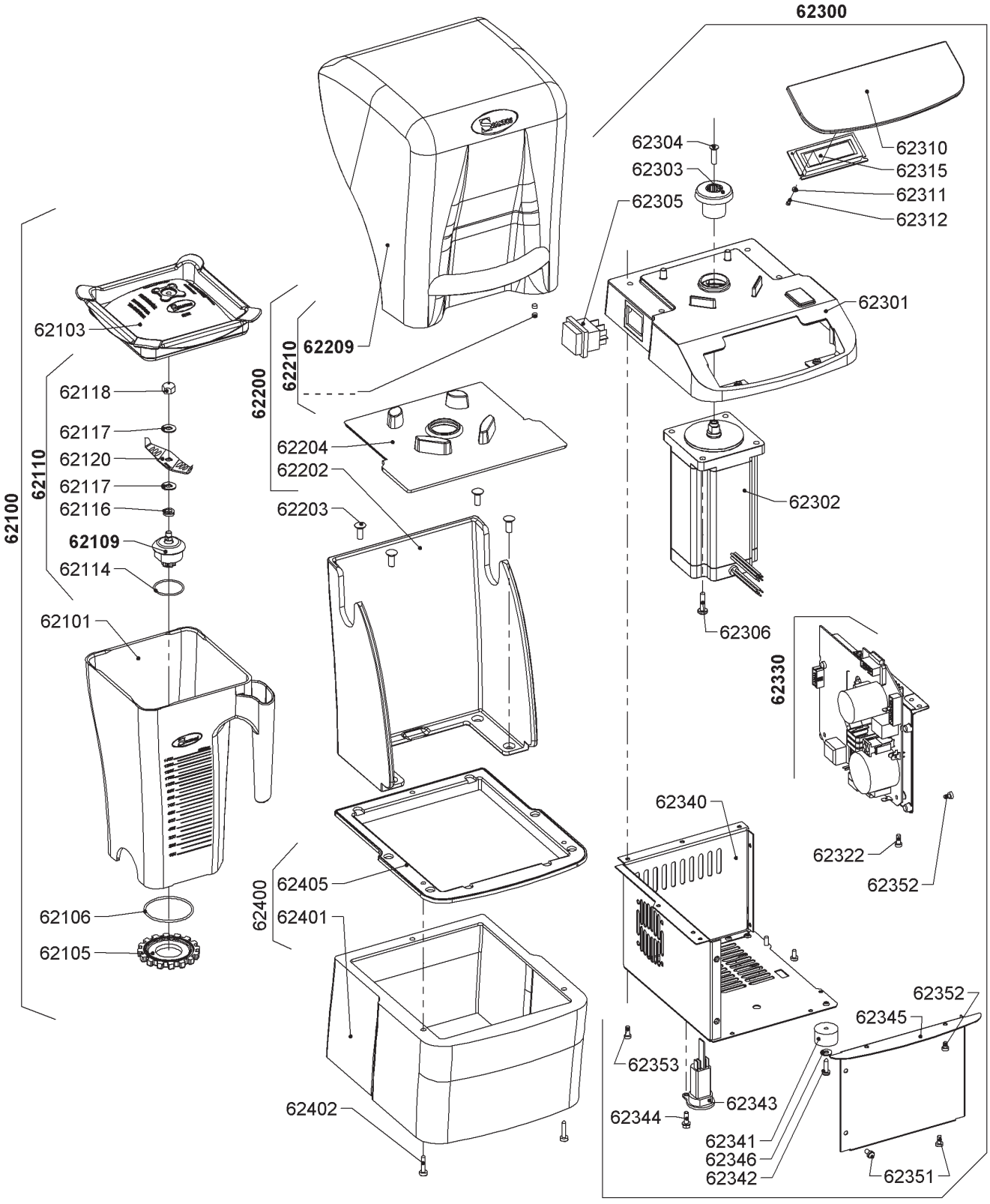

140 - 150 AV ROGER SALENGRO - 69120 - VAULX EN VELIN - LYON - FRANCE - TEL. 33 (0) 472 37 35 29 - FAX 33 (0) 478 26 58 21
Website : www.santos.fr - Email : santos@santos.fr